PROPORTIONAL VALVES PULSTRONIC II

with integrated digital control electronics

G1/4

FEATURES

The PULSTRONIC II is a compact electropneumatic pressure regulator (E/P transducer) which converts an electrical signal into a pneumatic pressure. It is particularly suited for precise pressure regulation due to its integrated control loop with electronic pressure feedback.

GENERAL

Fluids	: Air or neutral gases, filtered at 50 µm, lubricated or unlubricated
Connection	: G 1/4
Pressure range	: 0-3 bar, 0-6 bar, 0-10 bar
Temperature - Fluid	: 0 °C to +60 °C
- Ambient	: 0 °C to +50 °C
Analog setpoint	: 0 - 10 V, 0 - 20 mA, 4 - 20 mA
Failsafe behaviour	: Pressure held on loss of power, without control
Hysteresis	: < 1 % of span
Repeatability	: ± 0,5 % of span

CONSTRUCTION

Body: POM
Internal parts: POM
Seals: NBR, FPM

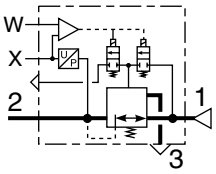

ELECTRICAL CHARACTERISTICS

voltage (residual ripple: max.10 %)	max. power (W)	max. current (mA)	insulation class	protection degree	electrical connection
24 V= +/-10%	3,6	150	F	IP 65	5-pin M12 connector (to be ordered separately)

SPECIFICATIONS

Ø ports	Ø orifice DN (mm)	flow	
		K_V coefficient (Nm^3/h)	at 6 bar (l/min - ANR)
G 1/4	4	0,25	470

CATALOGUE NUMBER

6 0 5 A S O F P

A: CONSTRUCTION (connection)
E = Digital, without display
D = DIgital, with display

S: SETPOINT
0 = 0 ... 10 V
1 = 0 ... 20 mA
2 = 4 ... 20 mA

O: OPTIONS
1 = Feedback output 0 ... 10 V
2 = Feedback output 0 ... 20 mA
3 = Feedback output 4 ... 20 mA

F: FAILSAFE BEHAVIOUR
0 = Pressure held

P: PRESSURE RANGE

Relative pressure:	Min./Max. allowable pressure:
3 = 0 - 3 bar	4 - 5 bar
6 = 0 - 6 bar	7 - 8 bar
0 = 0 - 10 bar	11 - 12 bar

00579GB - 2012/R01
Availability, design and specifications are subject to change without notice. All rights reserved.

DIMENSIONS (mm)**, WEIGHT** (kg)

VERSION G 1/4

Weight: 182 g

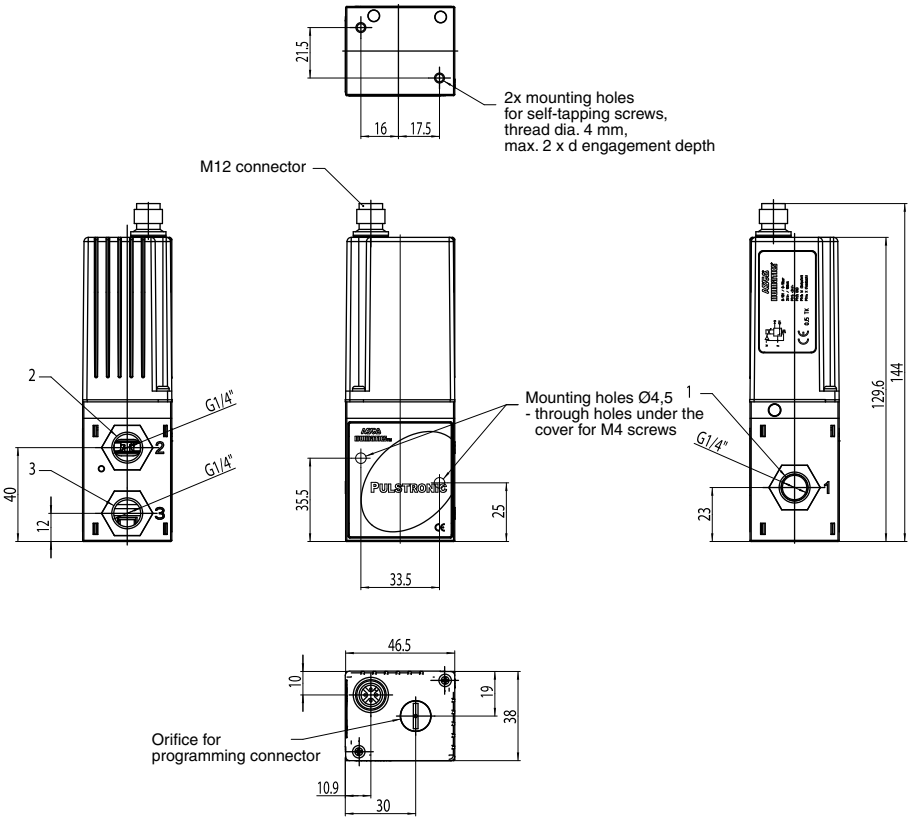

CONNECTOR PINNING / CABLE WIRING

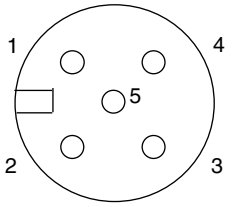

View from solder side

Pin	description	5-wire cable
1	24V voltage supply	brown
2	Analog setpoint input	white
3	Supply ground	blue
4	Analog output (feedback)	black
5	PE connection	grey
Cable shield	EMC shield	shield

ACCESSORIES

description	catalogue number
Straight M12 female connector, 5 pins, with screw terminals	**88100256**
Right-angle M12 female connector, 5 pins, with screw terminals	**88100725**
Supply cable 2m; 5x0,25 mm^2 ; straight connector	**88100726**
Supply cable 2m; 5x0,25 mm^2 ; right-angle connector	**88100727**
Supply cable 5m; 6x0,50 mm^2 ; straight connector	**88100728**
Supply cable 5m; 6x0,50 mm^2 ; right-angle connector	**88100729**
Supply cable 10m; 6x0,50 mm^2 ; straight connector	**88100730**
Supply cable 10m; 6x0,50 mm^2 ; right-angle connector	**88100731**
RS 232 cable converter; 2m cable with 9-pin Sub-D (plug connector)	**88100732**
RS 232 cable converter; 2m cable with 9-pin Sub-D (screw connector)	**88100970**
DaS Light: Data Acquisition Software for Pulstronic II - basic parameters - CD-ROM	**99100110**
DaS Expert: Data Acquisition Software for Pulstronic II - full parameters - CD-ROM	**99100111**

00579GB - 2011/R03
Availability, design and specifications are subject to change without notice. All rights reserved.