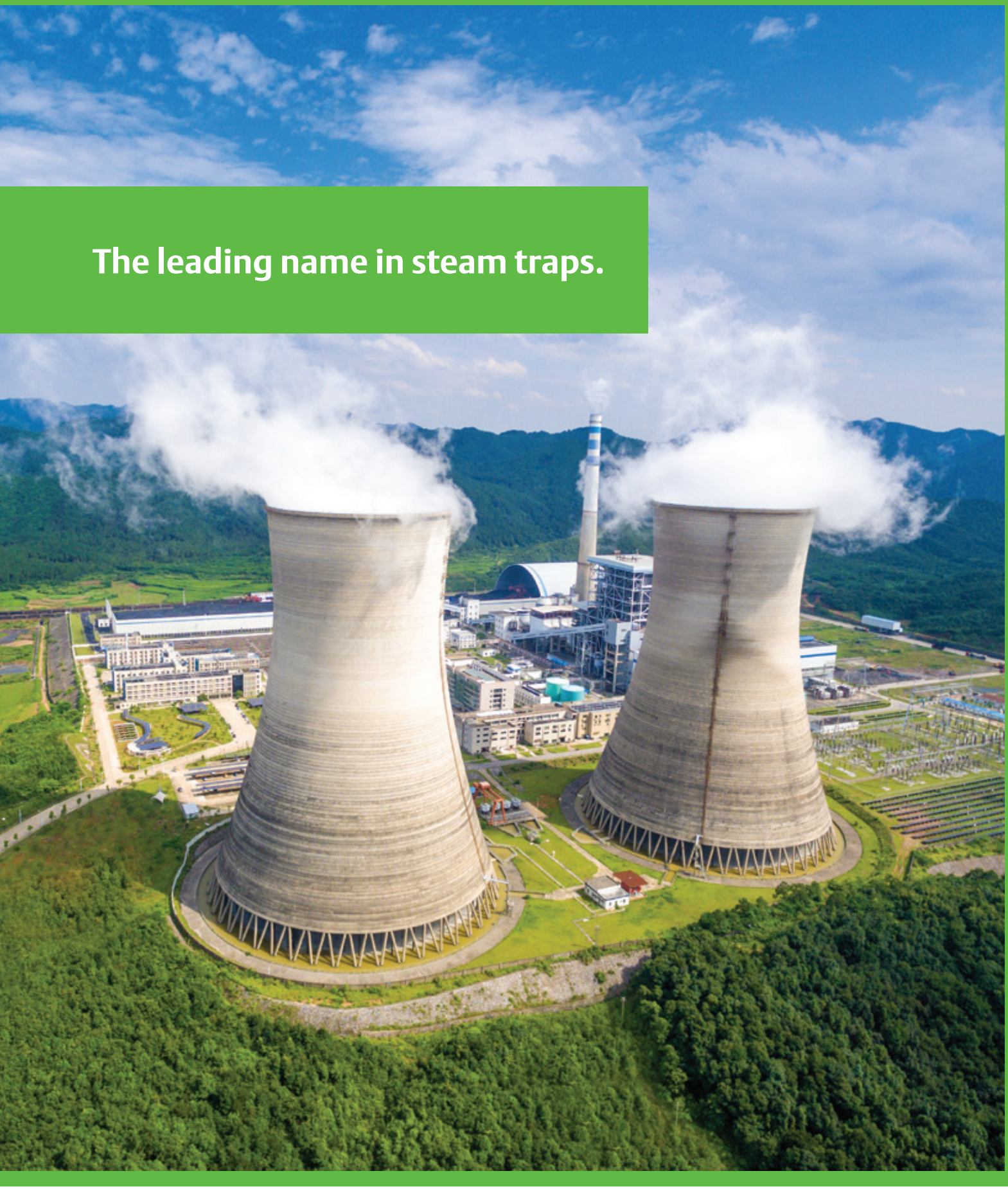

The leading name in steam traps.

Yarway Steam Traps

The Industrial Steam Trapping Handbook.

EMERSON™

All steam traps and related equipment is governed by an applicable code of construction. ASME, DIN, B 31.1 and others are mandated by law and code. The end user must use the applicable code when designing, constructing or repairing any steam related equipment. This guide book is to be used as a basic guide and does not address the required Codes for any region. The end user is responsible to ensure all applicable codes are followed as required in each jurisdiction.

CONTENTS

CHAPTER 1 – INTRODUCTION

Steam traps are used wherever steam is used and they are control valves. Their basic function is to allow condensate to flow, while preventing the passage of steam until it has given up its heat by condensing back to water. There are literally millions of steam traps in use worldwide.
Steam trap users range from laundries and tailor shops (with a few traps) to huge refineries and chemical complexes (with 10,000 to 15,000 units). Paper mills, textile plants, steel mills and food processors are all large users of steam and steam traps. Colleges, hospitals, prisons, government agencies, and similar large building complexes with central steam heating systems are also users of steam traps. This wide range of users creates an equally wide range of steam trap applications. In turn this wide variety of applications is matched by a seemingly bewildering array of steam trap types and sizes.

Energy costs lead to new awareness because of costs and environmental requirements
In recent years, user interest in steam traps has closely paralleled the increases in energy costs. This interest has been born of necessity. The high fuel costs associated with malfunctioning traps, and the low level of attention generally paid to their proper use, have simply become economically too painful to ignore. The malfunctioning traps waste energy, which in turn increases the requirement to produce steam and may contribute to environmental issues.
A few of the larger and more sophisticated trap users have developed test and evaluation programs to determine the kinds of traps that perform best in their plants. They have experimented with various types from different manufacturers. Organizational changes have created the job of Energy Conservation Officer, and his function invariably has led him to study the subject of steam traps. As a result, the skills necessary for diagnosing inefficient steam systems, and prescribing appropriate cures, have improved.

Figure 1.1 shows an ultrasonic steam leak detector and an infrared heat loss sensor. Both are used increasingly in efforts to detect energy losses. Identifying malfunctioning and misapplied steam traps is now recognized not only as an important task, but also one of greater complexity than initially perceived. Services of consultants and service companies specializing in the proper maintenance of steam traps have become increasingly popular.

No universal steam trap
With all of this attention and inquiry, many users have become aware that there is no universal trap or single trapping technology for all their needs. Appreciation has developed for the fact that many criteria must be considered in selecting a steam trap for a particular application. Different trap types will be selected or preferred according to the importance a user assigns to various criteria.
The objective of this book is to provide an up-to-date reference for trap users whose requirements may range widely. Its intent is to clarify and simplify the basics relating to steam trap selection, sizing, installation and maintenance without ignoring the subtleties and nuances of interest to the more knowledgeable reader.
While all steam traps have the same basic objective, pass condensate but trap steam, (they are also expected to pass air and other noncondensible gases without loss of steam), there is a wide range of design approaches to achieving this objective. Traps come in a variety of shapes and sizes. Some weigh less than a pound while others will exceed two hundred pounds. Some are intended for small copper tubing while others will be used with three inch steel pipe. Some may be used at pressures exceeding 2,500 psi while others may actually see vacuum service. Some are designed to drain several pounds of condensate an hour while others are expected to pass tens of thousands of pounds of condensate an hour.

FIGURE 1.1

Photo shows system manufactured by Miyawaki that combines testing of the trap with data storage and reporting. See VCTDS-03240.

Trap preferences vary
While steam is the same around the world, there are interesting preferences for one type of trap over another in different countries. This tends to reinforce the conclusion that despite the universality of the laws of thermodynamics, the problem of selecting a correct steam trap has no single correct answer. All major industrial countries have their own steam trap manufacturers serving local markets. Increasingly, they are trying to export their more successful models. This has had the beneficial result of increasing user options. It also has increased the user's need to understand fully the limitations and the benefits of those options. Emerson is a global supplier for steam traps, many other types and vendors are available for similar duty and services. The references in this book include Emerson products and other similar brands for illustration purposes.

Trap selection criteria
Steam traps are analogous to motor vehicles in that each has a single underlying purpose but is available in a wide variety of models and options. Selecting the correct model depends on user needs and preferences. In selecting the right trap a user must think hard about the priority of his needs. While efficiency and reliability may seem obvious requirements, other criteria (such as responsiveness to changing pressures and condensate flow rates, installation flexibility, ease of maintenance and troubleshooting) are more judgmental.

Nevertheless, they can significantly reduce the costs of operating an efficient steam system. Increasingly, users are recognizing all steam traps have the same objective: pass condensate but trap steam the difference between purchased cost, installed cost, and life-cycle cost. When all of these issues are considered, steam trap selection becomes a matter requiring thoughtful evaluation. At the least, a wrong selection means a savings opportunity missed; – at the worst, it can mean a costly disruption of production.

Cost considerations
Steam traps, like all other pieces of mechanical equipment, will fail in time. They may fail closed thereby restricting flow, or they may fail open, freely passing steam. It is difficult to appreciate fully the cost consequences of malfunctioning steam traps in a large plant without going through some basic arithmetic. Consider a plant with 6,000 traps and a consrvative assumption that at least 10% have failed in the open position and are "blowing through," wasting steam. Six hundred traps, losing 20 pounds of steam per hour per unit, for twenty-four hours, are losing 288 thousand pounds of steam per day. While steam generating costs vary from plant to plant (and are revised annually) an estimate of $5.00 per thousand pounds is very conservative. In this example, that equals $1,440 per day for a rate of $525,600 per year.

- 6,000 traps x 10% = 600 failed traps
- 600 failed traps x 20 lb/hr x 24 hr/day = 288,000 lb/day
- 288,000 lb/day x $5.00/1,000 lb = $1,440/day
- $1,440/day x 365 day/year = $525,600/year

These are all conservative numbers.

FIGURE 1.2
All steam traps have the same objective: pass condensate but trap steam

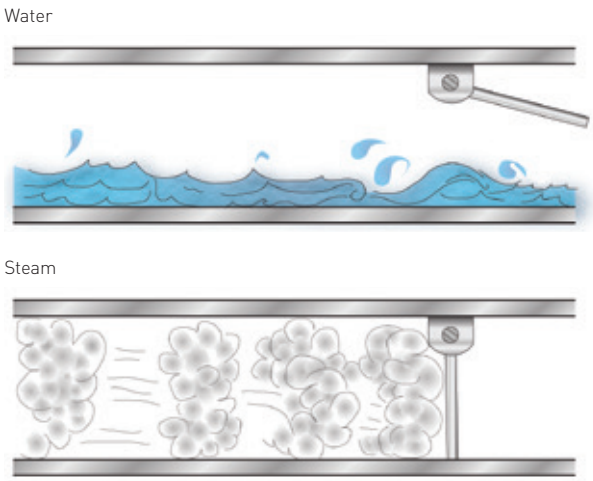

The costs resulting from traps that have failed in the closed position are not considered in the preceding example. They are much more difficult to quantify but they are no less real. These costs result from reduced productivity or product quality and higher rates of equipment damage due to corrosion, water hammer or freeze ups.
Why would any plant manager allow his steam YARWAY MODEL 741traps to waste this amount of steam? The answer is that he probably doesn't really know it is happening. If each failed trap had high visibility, it would be a different story. But with traps discharging into a closed return system the same telltale plumes of vapor, that quickly identify the leaking valve packing or flanged joint, are missing. Because frequently they fail to create a clearly visible problem, traps simply don't receive the attention they deserve. This example does not include any calculation to the amount of pollution generated during the production of the steam in the first place. A good review of the pay back process will include environmental issues as well as the direct cost of steam.

Process and protection traps
Industrial steam traps can be divided into two major groups: (1) traps designed for draining process equipment such as tire presses, drying rolls, air heaters and heat exchangers (often referred to as process traps); (2) traps designed for draining steam mains or tracing systems. The latter serve a protection function and are sometimes referred to as protection traps. Protection service, such as steam main drips and tracer heating, is by a wide margin the most common trap application and makes up the majority of the 6,000 units referred to in the earlier example. They generally see very light condensate loads, often less than 50 pounds per hour. Process traps are generally designed for condensate loads of several hundred pounds per hour to several thousand pounds per hour.

YARWAY MODEL 741

SUMMARY

Frequently underestimated as a significant contributor to efficient plant operation, steam traps are increasingly recognized as a small piece of equipment with a large role in optimizing plant efficiency and reduced environmental costs.
Designed to release condensate and air from steam systems without allowing the passage of steam, they are a small automatic self-actuated valve. They come in a wide range of sizes and models because they must meet a wide range of pressures and condensate load conditions. Users also tend to have different preferences for the kind of performance they expect from a trap.
Steam traps that have failed in service are seldom highly visible unless they are discharging directly to the atmosphere. Because of this, they generally receive inadequate maintenance attention. The direct cost consequences of this inattention, when measured in terms of unnecessary fuel consumption, can be startlingly high.
The indirect cost consequences, in terms of lost production or damaged equipment, can also be significant although they are less easily quantified and frequently not properly assigned to a faulty steam trap installation.
Any successful effort to control these costs must be based on a solid foundation of certain basic factual information about steam, condensate, how steam traps work, and the requirements of the systems into which they are installed.

FIGURE 1.3
Typical process trap application

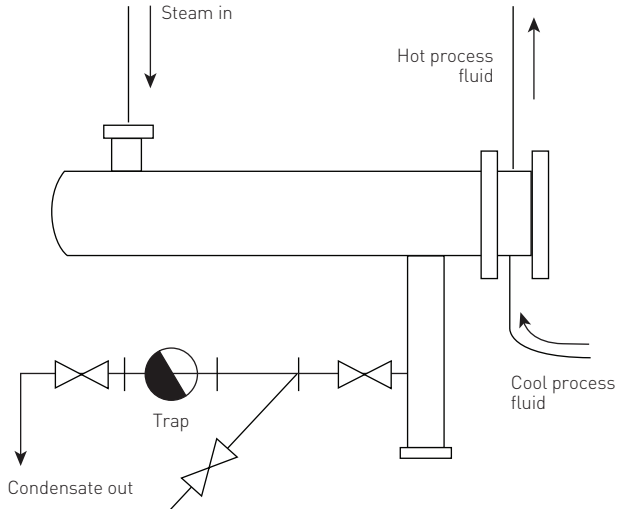

FIGURE 1.4
Yarway drip traps protect equipment and piping against damage that can result if condensate is not drained

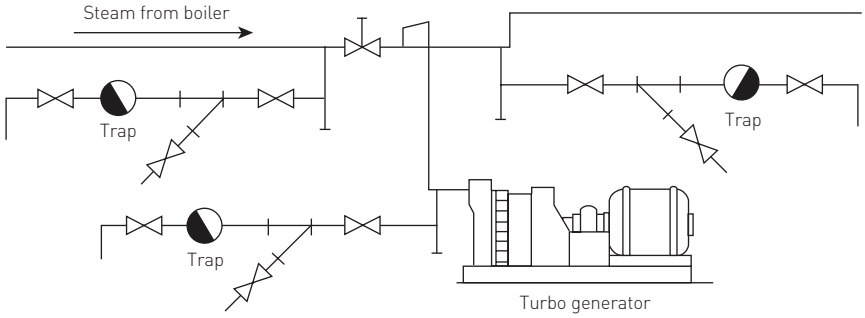

CHAPTER 2 – INTRODUCTION

Generating steam is not an end in itself. Steam is generated as a convenient way of transferring energy (heat and pressure) from one place to another. Its uses can be for heating, drying, cooking, curing or spinning a turbine – to name a few. It is the special properties of steam and water, and their easy availability, that make them so widely selected for this energy transferring role.

A review of some fundamentals concerning steam and condensate can be helpful. When water is heated, its temperature continues to rise up to the boiling point. Continued heating does not raise the temperature of the water but causes it to boil into steam having the same temperature as the liquid.

If water is heated in a closed vessel, the reaction is different in an important way. Once boiling starts and with the heating continued, several things occur; the pressure in the vessel increases and the temperature of both the water and the steam also increases. This means that water has a new and higher boiling point as pressures increase. For instance, at 100 psi water boils at 338°F instead of the familiar 212°F at atmospheric pressure. If heating continues after all the water has been evaporated, the temperature and pressure of the steam continues to increase and the steam is then called superheated steam.

If the heating is discontinued, a process is started that is just the reverse of that described above. As the vessel cools, the pressure also decreases. Initially, no condensation takes place as the steam gives up that portion of the heat it acquired after all the water in the vessel evaporated. After all the total heat of steam at atmospheric pressure the superheat has been given up, however, water starts to condense on the vessel walls. Continued cooling results in a decreasing pressure and the formation of more condensate. Ultimately all the steam will condense into water and the temperature and pressure will return to that which existed before the heating process started.

FIGURE 2.1
Steam and condensate system

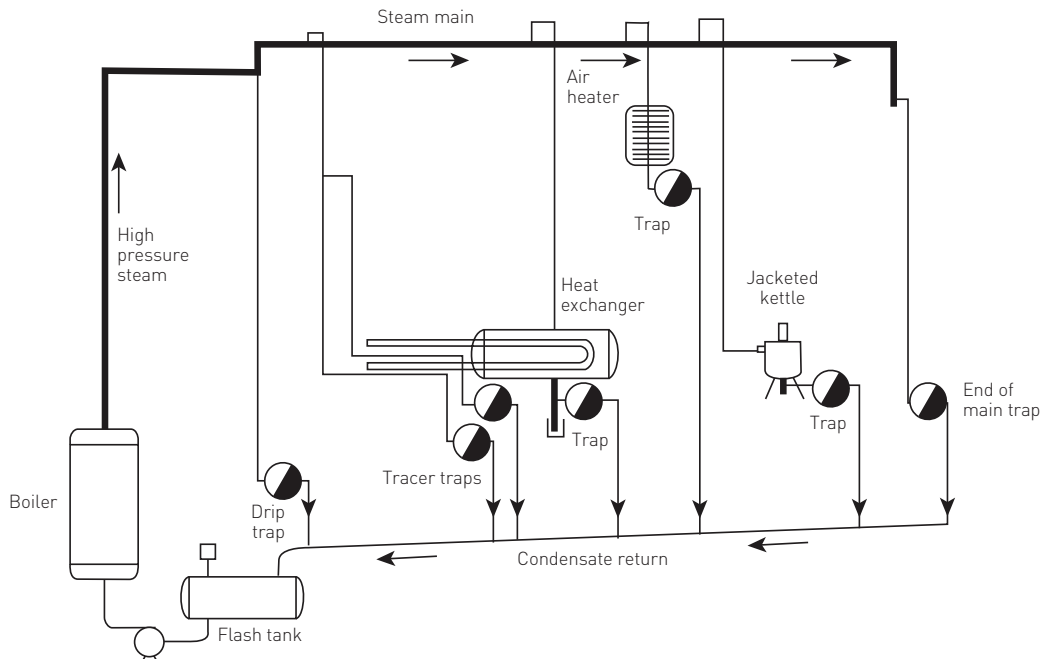

FIGURE 2.2
Total heat of steam at atmospheric pressure

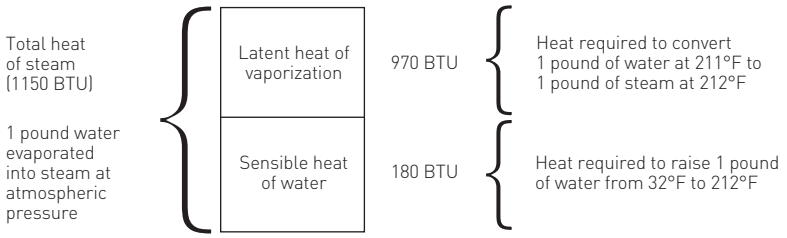

A more realistic situation is that of a steam generator or boiler with its heat and pressure energy being transferred by a piping system to equipment that is performing a useful task. As the steam gives up its heat in the equipment, condensate is formed. The condensate can then return to the boiler for reheating and the cycle is repeated. Figure 2.1 shows such a system.

Basic definitions

Some basic definitions are really essential to a full understanding of the steam generating cycle and the proper use of steam traps in an efficient steam-using system:

- **British thermal unit (BTU):** the quantity of heat required to raise one pound of water 1 degree Fahrenheit.
- **Sensible heat:** heat that produces a temperature rise in a body such as water.
- **Latent heat of vaporization:** heat that produces a change of state without a change in temperature, such as changing water into steam.
- **Saturated steam or dry saturated steam:** steam at the temperature of the water from which it was evaporated.
- **Wet steam:** typically, steam is not dry but contains fine water droplets resulting from the boiling process. The significance is that wet steam has a lower heat content than dry saturated steam.
- **Saturated water:** water at the same temperature as the steam with which it is in contact.
- **Superheat:** heat added to dry saturated steam.

Additional concepts

- **Total heat of steam:** the total BTU content of steam, including sensible heat of water, latent heat of vaporization and superheat (if any).
  This concept is shown in Figure 2.2 for steam at atmospheric pressure.
  The conclusion that can be drawn from Figure 2.2 is that there is more than five times the heat in one pound of steam at 212°F than in one pound of water at the same temperature. This means that for efficient heating with steam, condensate must be removed quickly. The presence of condensate acts to reduce the surface area exposed to steam with its much greater BTU (heat) content.
  The total heat of saturated steam at any pressure is the sum of latent and sensible heat and is shown in Figure 2.3.
  Higher pressures mean higher temperatures and faster heat transfer. But it is worth noting that higher pressures mean less latent heat of steam. More steam must be condensed at higher pressures, to transfer a given number of BTUs, than is the case at lower pressures.

- **The saturation curve:** graphic representation of the pressure and temperature at which saturated steam and water exist.
  As pressures increase in a boiler, so does the boiling point of water. Figure 2.4 shows how the boiling point increases from 212°F at 0 psi to 489°F at 600 psi. This curve is called the Saturation Curve. At temperatures above the curve, steam is in a superheated condition. At temperatures along the curve both steam and condensate are in the saturated condition. At temperatures below the curve, condensate is in the subcooled condition; i.e. its temperature is below that of saturated steam and water at that pressure.

- **Discharge temperature of steam traps:** The temperature of discharging condensate measured at the steam trap's inlet. Also, sometimes referred to as the temperature at which a steam trap starts to open.

Understanding the physical phenomena represented by the saturation curve is essential to understanding why in certain applications some types of steam traps are preferred over others. Most steam traps are unable to perform well over the entire range of pressure and temperature conditions represented in Figure 2.4. For example, some traps will work well at higher pressures but will be unable to shut-off the flow of steam at lower pressures. Alternatively, some that shut-off steam at lower pressures are unable to open sufficiently to allow a full flow of condensate at higher pressures. Also, many applications require a steam trap that will discharge condensate very quickly after it forms to obtain maximum heating efficiency for the equipment it is serving. This condensate will be very close to steam temperature perhaps only 3 or 4 degrees below that of steam. In other applications, the heat in the condensate as well as the heat in the steam can be used. In these cases the steam trap is not expected to open until the condensate is 30 or 40 degrees below that of steam.
Steam traps that open and close at temperatures just a few degrees below steam temperature are often referred to as 'hot' traps. Those that discharge condensate significantly subcooled below steam temperature are called 'cool' traps, even though they may be operating at temperatures much higher than 212°F. The requirements of the application determine which type of trap is most suitable.

FIGURE 2.3
Total heat of steam at pressures of 0 to 100 psi

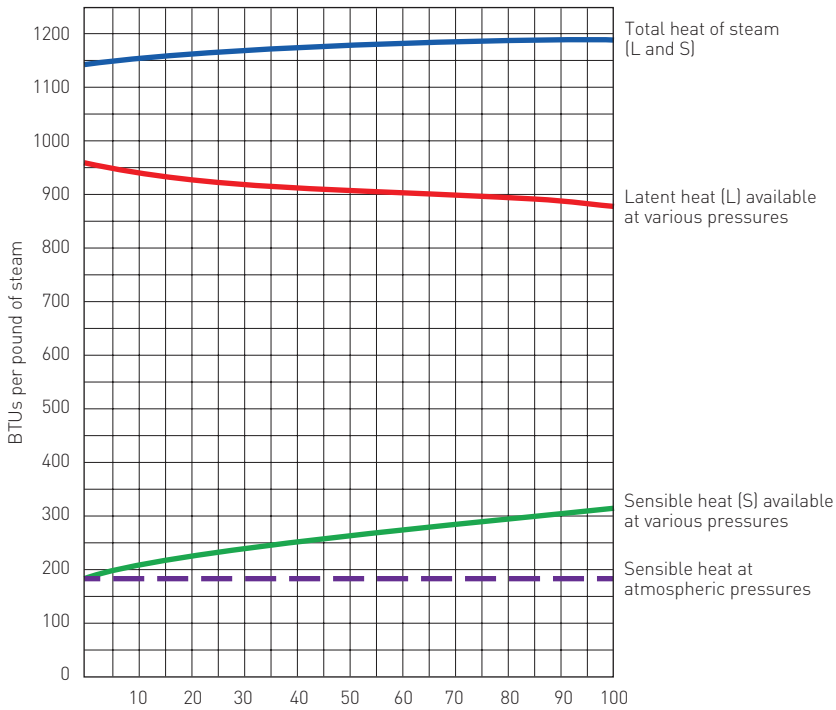

FIGURE 2.4
Saturation curve

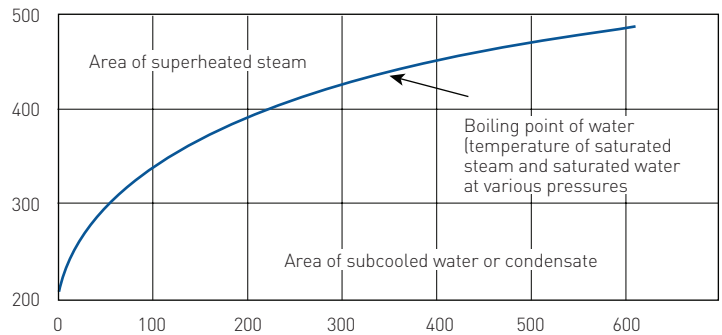

Figure 2.5 shows graphically the concepts described above. One type of trap (represented by the Trap A curve) opens quickly to discharge condensate when its temperature has dropped only a few degrees below that of steam. Its discharge temperature is said to parallel the saturation curve because it opens to discharge condensate the same few degrees below steam temperature over a wide range of steam pressures.
In contrast, the number of degrees that condensate must cool below steam temperature before a different type of trap (represented by the Trap B curve) will open, varies significantly at different pressures. In this example, condensate must cool a relatively large number of degrees below that of steam before it will open at pressures above 300 psi. As steam pressures drop below 300 psi, the number of degrees condensate must cool before the trap will open is progressively reduced until at 25 psi the trap is open continuously (unable to close), discharging both steam and condensate.

- **Steam tables:** listings of the heat content of steam in BTUs and its volume in $ft^3 \cdot lb$ at various pressures and temperatures.

The properties of saturated steam are most frequently summarized in steam tables, some of which are very extensive. Figure 2.6 shows this form in a very abbreviated listing. Appendix D provides more complete but still abbreviated tables.
Steam tables are essential for calculating the amount of steam to do a certain heating job. When the amount of steam required is known, so is the amount of condensate that will be produced and, in turn, the size of steam trap that is required. Chapter 4, Steam trap application, discusses in greater detail the calculations necessary in estimating condensate loads.
Flash steam: steam that results when saturated water or condensate is discharged to a lower pressure. When saturated water or condensate is released to a lower pressure, its boiling point is instantaneously reduced. Some of the condensate will boil or flash into steam. This is steam that could not exist at the higher pressure.

FIGURE 2.5
Discharge temperature characteristics of two different types of steam traps

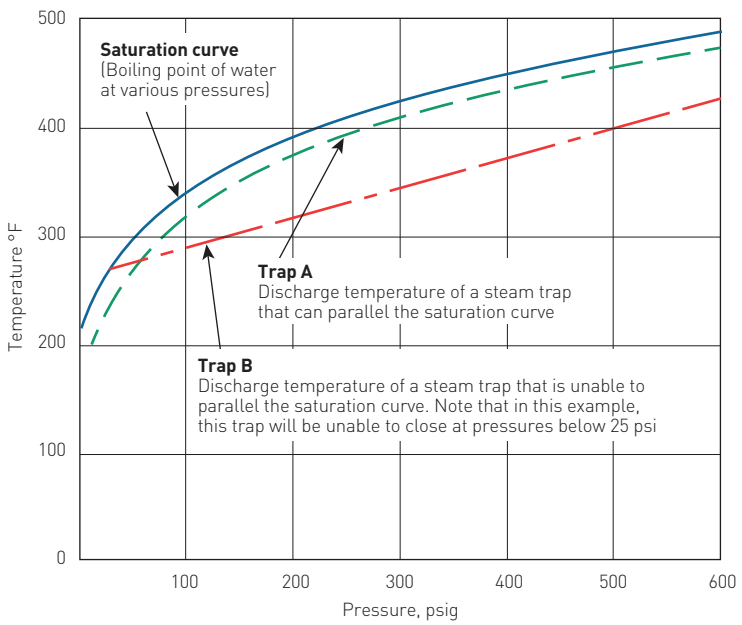

While the brief explanation of flash steam given above is accurate, the significance of the subject for both steam systems and steam trapping justifies more discussion. Here are several practical reasons for this:

1. The individual that expects to know the difference between a trap that is operating properly and one that is not must know the difference between flash steam and live steam.
2. Flash steam created unexpectedly in a poorly planned steam system can significantly reduce the efficiency of that system. It can also (under extreme conditions) cause malfunction of certain types of steam traps.
3. Flash steam in a properly designed steam system is an important element in using steam efficiently at successively reduced pressures for a series of different jobs.

By way of example, consider a steam trap draining a piece of equipment operating at 100 psi. Steam flows to the equipment and condenses as it gives up its heat. It is then that the steam trap should open, to drain the condensate, and reclose before live steam escapes. But the temperature of condensate at 100 psi is 338°F and, if it drains directly to atmospheric pressure, the laws of thermodynamics require it to achieve its atmospheric boiling point instantly and become 212°F. This is accomplished by some of the condensate flashing into steam also at 212°F. This discharge from the outlet of the trap then is a combination of hot condensate and flash steam and is typical of a properly functioning steam trap.

Flash steam problems

Confusion over flash steam starts with an individual, who is looking at a trap that is discharging to atmosphere, and who then attempts to decide if the steam coming from that trap is really live steam that has leaked through (a faulty trap) or if it is flash steam, the normal result of hot condensate boiling upon release to a lower pressure (a healthy trap). Both experience and judgment are needed to make a correct assessment. Chapter 6, Steam trap maintenance and troubleshooting, discusses this problem more fully.

Flash steam can create problems in the piping systems used to return condensate to the boiler. Condensate return systems that have not been properly designed to accept the volume of flash steam they actually experience will perform poorly. Flash steam expands to many times the volume that it had as water. Saturated water at 15 psi will have about 1600 times the volume when it flashes to steam at atmospheric pressure. This expansion process can so pressurize condensate return systems that proper drainage of the steam heated equipment, and performance of certain types of steam traps, are impaired. Connecting additional equipment to an already existing condensate return system is frequently the cause of excessive back pressures.

FIGURE 2.6
Steam table (see Appendix C for expanded table)

Pressure psig	Temperature °F	Heat in BTUs per lb			Specific volume of saturated vapor ft^3-lb
		Sensible	Latent	Total	
0	212	180	970	1150	27.0
25	267	236	934	1170	10.5
50	298	267	912	1179	6.7
100	338	309	881	1190	3.9
200	388	362	837	1199	2.1
300	422	399	805	1204	1.5
400	448	428	776	1204	1.1
600	489	475	728	1203	0.75

Flash steam as a valuable resource
Flash steam in a properly designed cascading return system allows for the efficient use of steam doing several different heating tasks at successively reduced steam pressures. Table (Figure 2.7) shows the percent of flash steam formed when condensate is discharged from a higher to lower pressure. For example, 7% of condensate discharged from a 100 psi system to a 30 psi system will be converted to flash steam. Tables such as these are used in designing condensate return tanks and systems.

Factors affecting steam systems
Up to this point emphasis has been focused on matters relating to the heat content of steam and water. However, there are some additional considerations associated with steam systems that have special significance for the steam trap user and designer alike.

While these are common problems, their adverse effects can be minimized by good planning and equipment selection. These problems include:

- **Water hammer:** condensate will always collect in the low points of a steam system unless special effort is made to drain it away or to eliminate the low point. Figure 2.8 shows a sagging steam main that has allowed condensate to accumulate. Steam flowing in the main, often at surprisingly high speeds (90 miles per hour is not unusual), will pick up slugs of condensate and slam them into valves, elbows, steam traps or other such equipment with devastating affect. Steam trap designers seek to create robust products that will withstand water hammer. Steam trap users are best advised to correct water hammer at its source by following good piping practice.

FIGURE 2.7
Percent of flash steam formed

Initial steam pressure psig	Sat. temperature °F	Flash-tank pressure*, psig										
		0	5	10	20	30	40	50	75	100	125	150
25	267	5.7	4.1	3.0	1.0	0.0	0.0	0.0	0.0	0.0	0.0	0.0
50	298	9.0	7.4	6.2	4.3	2.6	1.0	0.0	0.0	0.0	0.0	0.0
75	320	11.3	10.8	8.6	6.7	5.0	3.7	2.5	0.0	0.0	0.0	0.0
100	338	13.3	11.7	10.6	8.7	7.0	5.7	4.6	2.2	0.0	0.0	0.0
125	353	14.8	13.4	12.2	10.3	8.7	7.4	6.3	3.8	1.7	0.0	0.0
150	366	16.8	14.8	13.7	11.8	10.2	8.8	7.8	5.4	2.3	1.6	0.0
175	377	17.4	16.0	15.0	13.0	11.6	10.0	9.0	6.7	4.6	3.0	1.5
200	388	18.7	17.5	16.2	14.4	12.8	11.5	10.4	8.0	6.0	4.4	2.8
225	397	19.7	18.2	17.0	15.4	13.8	12.4	11.4	9.0	7.0	5.4	3.8
250	406	20.7	19.2	18.2	16.4	15.0	13.6	12.5	10.0	8.2	6.6	5.0
300	422	22.4	21.0	20.0	18.2	16.7	15.5	14.4	11.0	10.0	8.5	7.0
350	436	24.0	22.7	21.6	20.0	18.4	17.0	16.0	13.8	12.0	10.4	8.9
400	448	25.5	24.2	23.0	21.5	20.0	18.7	17.7	15.6	13.5	12.0	10.5
450	459	26.8	25.3	24.4	22.7	21.2	20.0	19.0	16.8	15.0	13.4	12.0
500	470	28.2	26.7	25.7	24.0	22.6	21.4	20.4	18.2	16.4	14.6	13.4
550	480	29.2	27.8	27.0	25.3	23.7	22.3	21.6	19.5	17.5	16.0	14.7
600	489	30.2	28.8	28.0	26.4	25.0	23.6	22.7	20.5	18.7	17.3	16.0

* The vessel used to receive high pressure condensate, and flash steam which can be used at lower pressures for additional heating, is called a flash tank.

FIGURE 2.8
Water hammer can result from accumulation of condensate in a sagging steam main

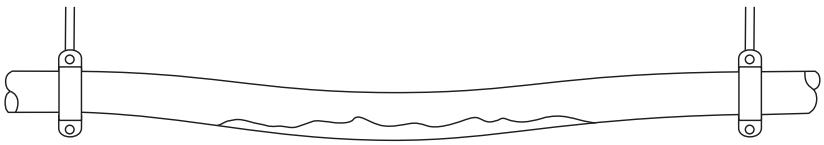

- **Air:** boilers and steam systems are full of air prior to startup. An especially important part of getting any steam system operating efficiently is the removal of air from it. Air is a poor conductor of heat, and mixtures of air and steam have less heat content than steam alone at the same pressure. Both of these factors have an especially adverse affect on heat transfer rates. Air is eliminated from the steam system by thermostatic air vents and by steam traps. Some traps are much more effective air eliminators than others, a subject which is discussed in greater detail in Chapter 3, Operating principles of steam traps.
- **Gases:** carbon dioxide and oxygen are both present in steam systems. Free oxygen is a normal constituent of water but it is principally the boiling process that volatilizes the carbonates in water to produce carbon dioxide. Both· gases foster corrosion. An important function of a steam trap is to assist in the purging of these noncondensable gases from the steam system.
- **Corrosion:** all steam systems and their associated components suffer from the effects of corrosion. Corrosion attacks boiler tubes, steam mains, heat exchangers, valve components and fittings such as steam traps. Over time all these items succumb. The primary defense is a carefully monitored and maintained boiler feedwater treatment system that controls the gases (oxygen and carbon dioxide) which promote corrosion. Carbon dioxide by itself is not corrosive, but it can combine with free hydrogen to form carbonic acid which is corrosive. A principal reason stainless steel is used extensively in steam traps is to resist the effect of corrosion and prolong the life of the trap.
- **Dirt:** the trash and accumulated debris in a newly piped steam system must be seen to be believed. In older systems dirt, corrosion products, and sealants from the maintenance repair of a leaky joint, continue to plague such components as small valves, instruments and steam traps. These devices with their small clearances and vulnerable seating surfaces are especially susceptible to dirt related failures. Dirt which prevents the free movement of internal parts or which gets caught between the valve and seat sealing surfaces leading to erosion damage is a major source of problems. With good reason, the knowledgeable user places a pipeline strainer upstream of each steam trap.

SUMMARY

A basic knowledge of the properties of steam and the problems of steam systems is an essential foundation to a good understanding of steam trapping.
Concepts such as the significantly greater heat content of steam over condensate (at the same temperature) and the predictable affect of pressure changes on steam and condensate formation (as shown by the saturation curve) are important. It is when these principles are violated that steam heating and steam trapping problems develop.
Flash steam is useful when properly directed and a problem when it is not. In addition, it is confusing to the field technician checking steam trap performance. Here, experience is the best teacher.
All steam systems must deal with problems of corrosion, air and gas venting, dirt (usually corrosion products) and water hammer. Steam traps are both a victim of these problems as well as potential solution contributors – it is knowledge of good practice that will decide whether they are part of the problem or part of the solution.
Emerson's goal in writing this book is to inform the engineer on useful tools and tips to using steam traps correctly.

YARWAY MODEL 151

CHAPTER 3 – INTRODUCTION

Steam traps are an important element of any steam system. They are expected to perform a vital function with an absolute minimum of attention. If properly selected, sized, installed and maintained, traps can provide many years of trouble-free service. A clear understanding of their working principles with their inherent advantages and limitations will greatly simplify the processes of selecting a proper trap, solving system problems and diagnosing trap malfunctions.

Definition

A steam trap can be defined as a self-contained valve which automatically drains condensate and discharges air and noncondensible gases from a steam-containing pipe or vessel. It remains closed in the presence of steam. In some designs, however, it will allow steam to flow at a controlled or adjusted rate.
While this statement defines the basic functions of a steam trap, it should be understood that the device must be capable of operating at pressures ranging from a vacuum to 4500 psi and pass condensate loads ranging from zero (under superheated conditions) to as high as 100,000 lb/hr for certain process equipment. Actual installations vary as well. Some traps will see service at constant pressure and condensate load. Others will need to accommodate variations in pressure and condensate load and may be installed in systems that are shut down frequently. Clearly, no single device can serve all needs. A variety of types, sizes and configurations is necessary to satisfy all conditions.

Basic steam trap types

Over the years, three basic trap types have evolved and have been classified according to their mode of operation. Certain types of traps may combine two working principles in their operation. Within the scope of this book, however, the predominant condensate discharge principle shall designate the trap type. The three types are:

- **Thermodynamic traps:** traps that are actuated by the principles of thermodynamics and fluid dynamics.
- **Mechanical traps:** traps that are actuated by a float, responding to changes in condensate level.
- **Thermostatic traps:** traps that are actuated by temperature sensitive devices, responding to changes in condensate temperature.

Thermodynamic traps

Thermodynamic traps are phase detectors in that they can discriminate between liquids and gases. But they do not discriminate between steam and air or other noncondensible gases. Therefore they have a reduced ability to bleed-off those gases. Minute amounts of steam may also be passed. The thermodynamic working principle is simple and, with only one moving part, these small devices are rugged. There are three basic types of thermodynamic traps. They differ from one another by the configuration of the valve they use to open and close a port. Each is well adapted to a particular set of service conditions.

YARWAY MODEL 711UCF2

1. **Disc traps:** disc traps utilize the heat energy in hot condensate and the kinetic energy in steam to open and close a valve disc. They are phase detectors, sensing the difference between liquid and gas or vapor.

During initial startup, pressure created by cold condensate pushes the valve disc off the seating surface. This uncovers the inlet and outlet ports, allowing discharge. As condensate reaches the inlet port (a restriction), it experiences a decrease in pressure and an increase in velocity (in accordance with the laws of fluid dynamics). If the condensate is very close to steam temperature, the lower pressure will cause it to flash into steam (in accordance with the laws of thermodynamics). The resulting high velocity flow beneath the disc, with its attendant localized pressure reduction under the disc, causes it to snap shut. Flow through the trap then stops until the pressure in the chamber over the disc decays sufficiently to allow the inlet pressure to force the disc off its seat. Condensate then flows through the trap until once again it reaches such a velocity and lowering of pressure that flashing occurs and the disc can snap shut. This cycle continuously repeats itself the disc opening to allow the flow of condensate, and closing on high velocity flash steam.

Disc traps are most frequently used in light condensate load applications and are known as 'hot' traps – i.e., quickly discharging very hot condensate immediately after it forms.

Advantages
- Failure mode, gradually, predictably open over time.
- Simple construction.
- Small size and light weight.
- Can be mounted in any position.
- Rugged, withstands water hammer.
- Self draining, not damaged by freezing.
- Function not impaired by superheat.
- Versatile, suitable for wide pressure range.
- Condensate discharge temperature closely follows the saturation curve.
- Performance is easily checked in field.

Disadvantages
- Marginal air handling capability.
- Excessive back pressure in return systems can prevent trap from closing.
- Life is reduced significantly as pressures move above 300 psi.
- High discharge noise level.
- Dirt particles can increase cycle rate causing wear.

YARWAY MODEL 721

FIGURE 3.1
Disc trap

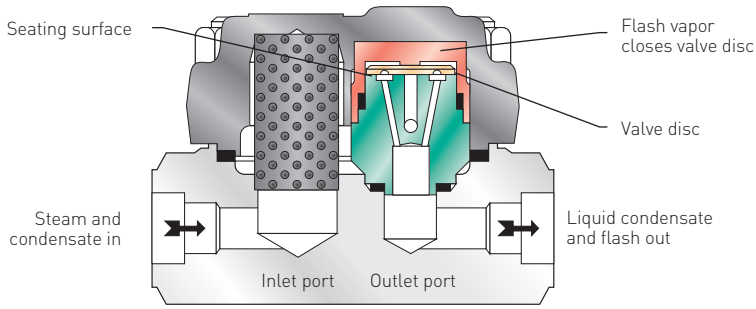

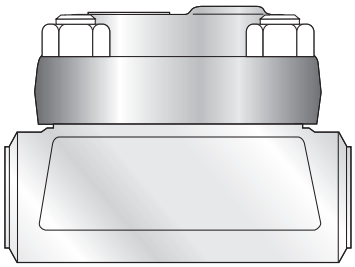

2. **Piston traps:** piston traps utilize the heat energy in hot condensate, and the kinetic energy in steam, to open and close a valve. Like disc traps, they are phase detectors sensing the difference between a liquid and gas or vapor.

During initial startup, pressure created by the cold condensate lifts the piston valve, allowing discharge of condensate. During this phase, the control chamber pressure is low because the second or control orifice, can discharge more condensate than can be supplied to the control chamber through the first orifice. When the temperature of the discharging condensate is very close to steam temperature (i.e., saturation temperature), the condensate, experiencing the lower pressure of the control chamber, will change into flash steam (in accordance with the laws of thermodynamics). This flashing of the condensate in the control chamber chokes the flow through the control orifice, causing an increase in control chamber pressure. This increased pressure, acting on a larger effective area of the piston valve than the inlet pressure, causes it to snap shut – preventing steam flow through the trap. When cooler condensate reaches the trap, causing the control chamber pressure to drop, flashing ceases and the trap re-opens to repeat the cycle.
The control orifice provides a continuous discharge which is helpful in passing air or other non-condensable gases during startup.

The piston valve remains closed in the presence of steam because the pressure on top of the piston acts on a larger effective area than the inlet pressure under it. Steam loss through the control orifice is minimal.
Introduced in the 1930's the piston trap was the first thermodynamic trap. It is a 'hot' trap, providing excellent service in high pressure applications.

Advantages
- Suitable for high pressure.
- Can be mounted in any position.
- Good response to changing condensate load conditions.
- Rugged, withstands water hammer.
- Self-draining, not damaged by freezing.
- Function not impaired by superheat.
- Good air handling capability.
- Primary failure mode-open.
- Small size and light weight.

Disadvantages
- Excessive back pressure in return systems can prevent trap from closing.
- Condensate discharge temperature follows the saturation curve over a limited range.
- Difficult to field check because of continuous control flow discharge.

FIGURE 3.2
Piston trap

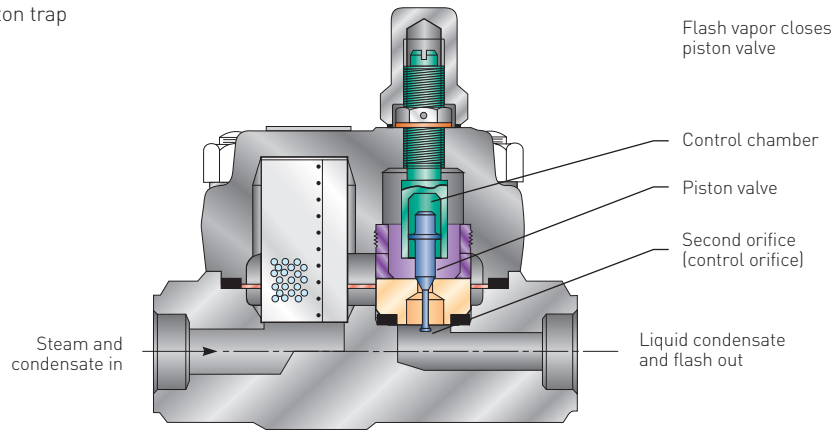

3. **Lever traps:** lever traps are a variation of the thermodynamic piston trap. They operate on the same principle as piston traps but with a lever action rather than a reciprocating piston action.

When the lever is closed, there is a limited flow through the annulus between the inlet valve and its seat (first orifice) which then enters the control chamber and flows out through the second or control orifice. Incoming condensate pushes the lever upward with a tilting motion and full flow goes under it and out the discharge port. Condensate flowing past the inlet seat (a restriction) experiences a pressure drop (in accordance with the laws of fluid dynamics) and it will flash into steam (in accordance with the laws of thermodynamics) when the condensate temperature is very close to steam temperature (saturation temperature). The localized lower pressure under the lever (created by the high velocity flow of flash steam) causes the lever and inlet valve to snap shut. This prevents steam flow through the trap. When condensate with its cooler temperature again reaches the trap, it will reopen, repeating the cycle.

The control orifice has a continuous discharge which is helpful in passing air and other noncondensible gases during startup. Steam loss through the control orifice is minimal. Lever traps are designed for applications having especially large condensate loads and that benefit from the very rapid discharge of condensate after its formation.

Advantages
- Suitable for high pressure applications.
- Good response to changing condensate load conditions.
- Rugged, withstands water hammer.
- Not damaged by freezing.
- Function not impaired by superheat.
- Good air handling capability.
- Small, compact, easy to install and service.

Disadvantages
- Excessive back pressure in return systems can prevent trap from closing.
- Difficult to field check due to continuous control flow discharge.
- Can only be mounted in one position.

FIGURE 3.3
Lever trap

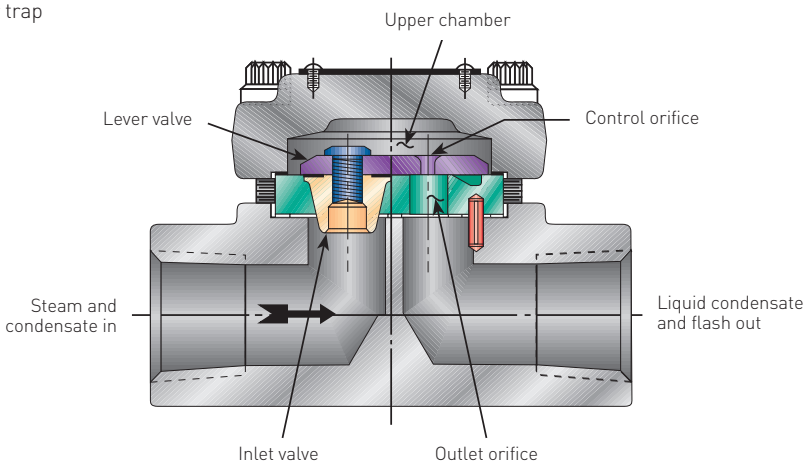

Mechanical traps

Mechanical traps are density detectors and therefore also have difficulties venting air and noncondensible gases. Mechanical traps employ either an open or a closed float to actuate a valve. Closed float mechanical traps usually employ a secondary thermostatic air vent which allows the trap to discharge air rapidly. The air vent, of course, is an extra component which can fail open, causing the loss of steam, or fail closed and prevent the trap from discharging condensate. Closed float traps are usually large in physical size. This, combined with a float that is fragile to external pressure, and the continuous presence of condensate within the trap, make this device unsuitable for high pressure applications or installations where water hammer or freeze-ups can be expected.

On the positive side, these devices respond to changes in condensate level only, independent of temperature or pressure. They respond rapidly to changing loads. Condensate discharge temperatures follow closely the saturation curve and they have a modulating (rather than an on-off) type of discharge. They are extremely energy efficient.

Open float mechanical traps share many characteristics with closed float traps. One major difference, of course, is the open float as found in an inverted bucket trap. The open float is no longer a weak point, because it cannot be collapsed by excessive pressure. Venting is usually accomplished by means of a small vent hole in the top of the bucket. This is a compromise, as the efficiency of the trap is affected by the sizes of the vent. The larger the vent the better the air handling, but at the expense of higher steam losses. A smaller vent has the opposite effect. The end result is a trap that is relatively efficient, but which does not remove air rapidly during startup conditions. It discharges near steam temperature with an on-off action and the discharge temperature follows the saturation curve. All mechanical traps are position-sensitive and can be installed only in their intended orientation.

1. **Closed float traps:** although it is one of the oldest on the market, the closed float trap is still in widespread use. The opening and closing of the valve is caused by changes of the condensate level within the trap shell.

When the trap is empty, the weight of the float closes the valve. As condensate enters the trap, the float rises and opens the valve, allowing condensate to be discharged. The float is designed to provide sufficient force to overcome the differential pressure across the valve. The internal float and valve configuration is such that the condensate level is always above the valve, thus creating a continuous water seal at its seat. Actual construction varies widely depending upon the manufacturer. While most designs employ a linkage-pivot system, one particular design uses no linkage at all and relies on a free floating ball to achieve the desired action.
An inherent disadvantage of a simple float trap is that it cannot discharge air or noncondensible gases. It is therefore necessary to install an auxiliary thermostatically activated air vent. For this reason, these traps are known as float and thermostatic or F and T traps.

Advantages
- Unaffected by sudden or wide pressure changes.
- Responds very quickly to condensate load changes.
- Continuous discharge.
- Condensate discharge temperature closely follows the saturation curve.
- Function is not impaired by high back pressures.
- Energy efficient.
- Simple construction.

Disadvantages
- Relatively large and heavy.
- Float easily damaged by water hammer.
- Does not withstand freezing.
- Can be mounted only in one position.
- Suitable only for relatively low pressures.
- Requires auxiliary air vent which is an additional source of failure.
- Primary failure mode is closed.
- Not self-draining.

FIGURE 3.5
Float and thermostatic trap

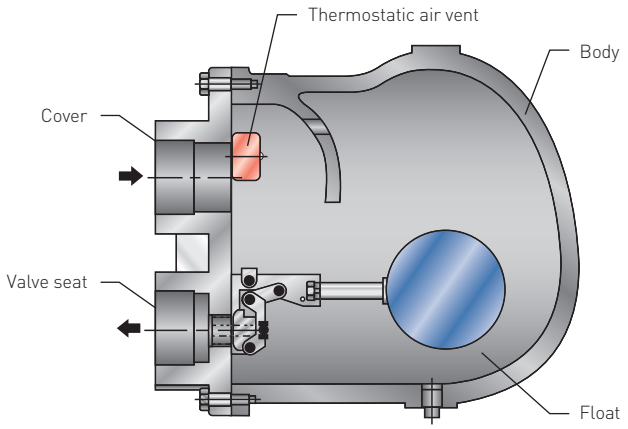

2. **Inverted bucket traps:** inverted bucket traps are members of the mechanical trap family, using an open 'inverted bucket' as a float. The trapping principle utilizes the difference in density between steam and water.

The construction of the trap is such that the trap inlet leads into the bottom and open end of the inverted bucket. Discharge is through an outlet valve above the inverted bucket.
Steam entering the inverted and submerged bucket, causes it to float and close the outlet valve, preventing discharge of steam. Steam in the bucket both condenses and leaks through the vent, allowing the bucket to sink and open the valve to discharge condensate. The weight of the bucket must be sufficient to overcome the closing force created by the differential pressure across the valve. Inverted bucket traps discharge condensate intermittently very near saturation temperature.
Any air or noncondensible gases entering the trap will also cause the bucket to float and the valve to close. Since they cannot condense as steam does, those gases will cause the trap to remain closed.

In order to overcome this problem, the bucket has a hole to vent air and steam. The size of this vent hole has to be relatively small to prevent excessive loss of steam in addition to the air.
While most inverted bucket traps utilize a linkage system to obtain their desired action, one particular design uses no linkage at all and uses a free-floating open spherically-shaped float in its design execution.

Advantages
- Simple construction.
- Rugged.
- Condensate discharge temperature closely follows the saturation curve.
- Reliable.

Disadvantages
- Marginal air handling during startup.
- Not self-draining; subject to freeze-ups.
- Not suitable when superheat is present.
- Can lose prime, and is not self-priming.
- Can be mounted only in a single position.
- Failure mode is unpredictable (open or closed).

FIGURE 3.6
Inverted bucket trap

3. **Open bucket trap:** open bucket traps are rarely used today. As with other mechanical traps, they utilize the difference in density between steam and water.

When condensate first enters the trap, it fills the trap body and causes the bucket to rise and close the valve at the top of the trap. If entrapped air is removed, condensate will continue to enter the trap, finally spilling over into the bucket. This causes it to sink and open the valve allowing discharge of condensate. When steam arrives, it pushes the condensate out of the bucket through the syphon tube, which in turn refloats the bucket and closes the valve. As the steam in the trap condenses, additional condensate enters the trap and the cycle is repeated.
This type of trap requires an auxiliary thermostatically activated air vent, similar to that used in the float and thermostatic trap.

Advantages
- Simple construction.
- Reliable.
- Condensate discharge temperature closely follows the saturation curve.
- Function not impaired by high back pressure.
- Fast response to changing condensate loads.

Disadvantages
- Not self-draining; subject to freeze-ups.
- Not suitable when superheat is present.
- Can lose prime, not self-priming.
- Can be mounted only in a single position.
- Requires auxiliary air vent which is an additional source of failure.
- Suitable only for relatively low pressures.
- Relatively large and heavy.

FIGURE 3.7
Open bucket trap

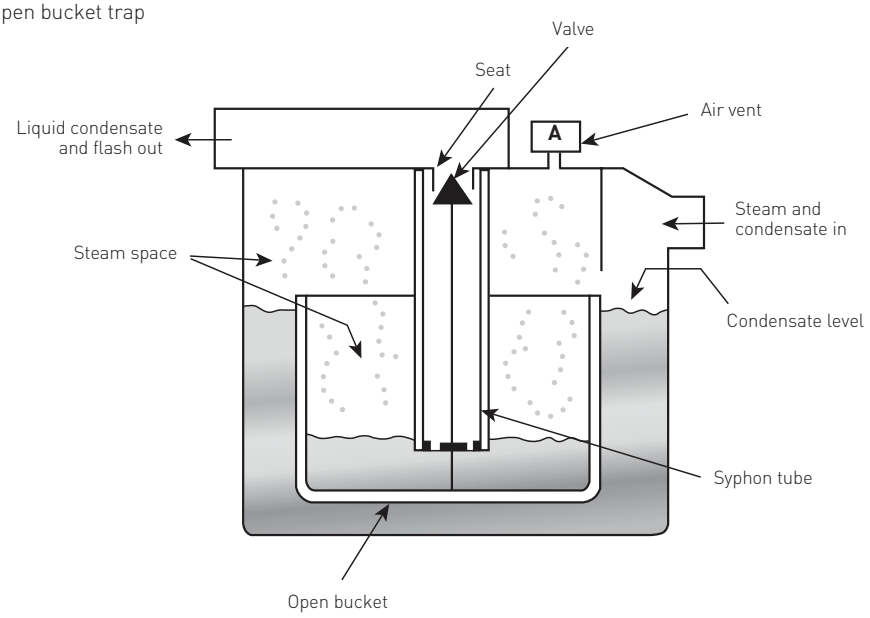

Thermostatic traps
Thermostatic traps respond to changes in temperature and therefore discriminate very well between steam and cooler noncondensible gases. They can rapidly purge air from a system, especially on a cold startup, and can be installed in various positions. Most frequently, actuation is by means of a bimetallic element or a bellowslike capsule filled with a vaporizing liquid.
Bimetallic actuated devices are characterized by their high resistance to damage from freeze-ups, water hammer and superheat. They are relatively small in size and lend themselves to high pressure designs. The condensate discharge temperature, however, does not follow the saturation curve very well, and the bimetallic elements are subject to corrosion with some reduction in closing force over time.

Bellows actuated traps, on the other hand, discharge condensate at a temperature which follows the saturation curve. The weak point is the bellows itself which can be damaged by superheat, water hammer or freeze-ups. Thermostatic traps respond slowly to changing conditions even though the cause is usually misunderstood. It is not the heat sensitive element that is slow to respond. Rather it is the heat energy in the condensate inside the trap, which is slow to dissipate, that causes the time delay. Insulating thermostatic traps reduces their responsiveness even more. Mounting the trap at the end of a cooling leg in an area where air can circulate improves responsiveness and is the basis for installation instructions recommending a cooling leg at least three feet in length.

YARWAY MODEL SP80

FIGURE 3.8
Cross-sectioned bimetallic actuated trap; a simple thermostatic

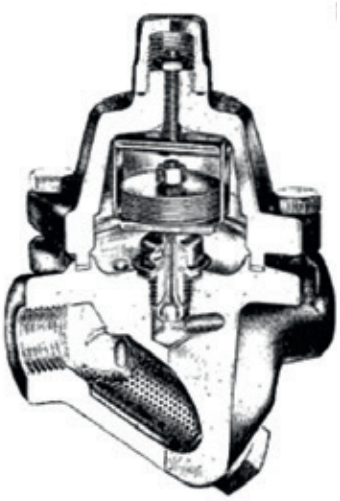

FIGURE 3.9
YARWAY MODEL 151

YARWAY MODEL 151A

1. **Bimetallic:** bimetallic steam traps utilize the sensible heat in the condensate in conjunction with line pressure to open and close a valve mechanism.

The valve and seat system is usually arranged to produce a 'flow under the seat' condition. Supply pressure, in other words, tends to open the valve. The bimetallic elements are in the form of small discs and are arranged to produce a closing force with increasing temperature. This closing force is in opposition to the opening force created by the supply pressure. Some bimetallic traps use a single leaf element rather than the stacked disc elements shown in Figure 3.10.
The traps are generally factory-adjusted so that at saturated steam conditions, the temperature created force of the bimetallic elements prevails, closing the valve and preventing loss of steam. As the temperature of the condensate cools, the line pressure becomes the dominant force, causing the valve to open and allowing the discharge of condensate. Back pressure in a closed return system provides an additional closing force resulting in a lower opening temperature than the same trap discharging to atmosphere. The discharge temperature, therefore, is affected by back pressure.
A design problem for bimetallic traps is created by the non-linearity of the saturation curve.
Shaping and stacking techniques of the bimetallic elements have made it possible for these traps to have a discharge temperature that approximates the saturation curve. This has expanded the useful pressure range of bimetallic traps without adjustment.
The modern bimetallic trap has many technical and practical advantages.

Advantages
- Rugged.
- Energy efficient.
- Self-draining.
- Resistant to freeze damage.
- Withstands water hammer.
- Capable of discharge temperature adjustment.
- Can be mounted in several positions.
- Primary failure mode-open.

Disadvantages
- Dirt particles can prevent tight valve closing.
- Condensate discharge temperatures do not follow the saturation curve closely.
- Difficult to field check when operating in a throttling mode.
- Condensate discharge temperature is made lower as back pressure increases.
- Relatively slow response to changing condensate loads.
- Bimetallic elements are relatively susceptible to corrosion.

FIGURE 3.10
Bimetallic trap

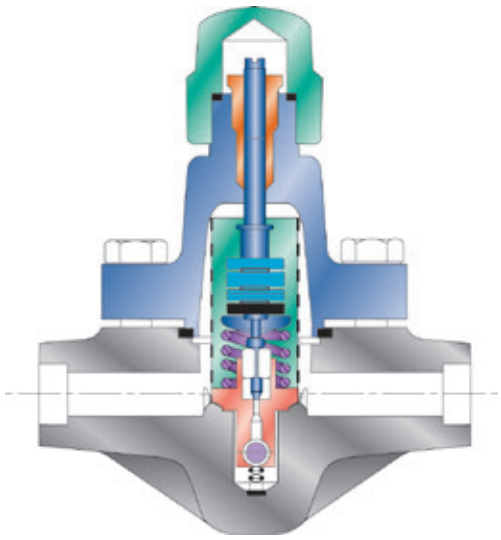

2. **Bellows traps:** bellows traps are thermostatic traps that respond to changes in the temperature and pressure of the steam supply to open and close a valve. The valve actuator is a capsule or bellows filled with a vaporizing liquid, and having both a fixed and a free moving end, it opens or closes the valve in response to internal pressure changes. The most frequently used actuating element is a corrugated bellows. Single-diaphragm capsules are also used but provide a correspondingly shorter stroke.

This simple operating principle provides many desirable operating characteristics. For example, the number of degrees below steam temperature at which the trap will open can be varied so the trap provides either a 'hot' or 'cold' discharge. Also the normal failure mode (open or closed) can be changed.
The characteristics of the actuating system can be affected by the liquid fill and natural free length of the actuator. The principles can best be explained by considering a bellows, even though they apply equally well to single diaphragm capsules.
The Yarway bellows traps have been improved in design, construction and materials to minimize their inherent disadvantages. Today they play an important role in steam trap application.

Concepts defined
- **Natural free length:** length of the bellows assembly before it is sealed.
- **Assembled free length:** length of the bellows assembly after it is sealed, in its cold (contracted) condition.

In the most common arrangement, the bellows is located upstream of the valve and thus senses upstream conditions. Flow direction is over the seat tending to close the valve. During cold startup, the bellows is contracted, allowing condensate and air to be discharged. As the temperature of the flowing medium rises, the bellows also gets hot, the liquid inside it vaporizes and expands (strokes) the bellows to close the valve. Failure of this type of trap generally refers to the rupture of the bellows.

After such a rupture, the bellows will return to its natural free length which can be designed so that the trap will be in either an open or closed condition.

- **Fail open design:** this definition implies that the natural free length must contract the bellows away from the seat. To make this arrangement functional, the bellows must be filled with a liquid having a boiling point lower that of water, because for the bellows to expand, the internal pressure must be higher than the external steam pressure.

Low boiling point liquids, such as alcohols or ether, are frequently used in bellows but have the disadvantage that their saturation curve does not exactly correspond to that of steam. As a result steam traps having such a bellows will discharge condensate having different levels of subcooling over a wide pressure range.

- **Fail closed design:** this definition implies that the bellows remain expanded upon rupture. This can be accomplished by evacuating the bellows initially to obtain a contracted assembled free length. During normal operation when the bellows is hot, the pressure inside the bellows will approach the steam supply pressure, causing it to expand. Evacuated bellows are usually filled with water. The inherent advantage is that the condensate discharge temperature of traps having such a bellows will closely follow the steam saturation curve.

Advantages
- Excellent air handling capability.
- Energy efficient.
- Self-draining.
- Various condensate discharge temperatures available depending on bellows design.
- Condensate discharge temperature follows the saturation curve.
- Can be mounted in several positions.
- Simple construction.
- Small size and weight.

Disadvantages
- Bellows elements tend to be failure prone, especially when subjected to water hammer.
- Difficult to field check when operating in a throttling mode.
- Generally not suited for high pressure applications.
- Limited superheat capability.
- Short stroke diaphragm design susceptible to dirt initiated failures.

FIGURE 3.11
Bellows trap

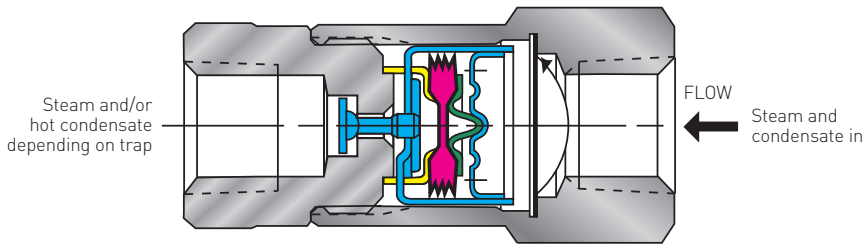

3. **Liquid or solid expansion trap (wax capsule type):** liquid or solid expansion traps are finding limited application today.

The opening and closing of these traps is a function of temperature and balanced return spring forces. Elevated temperatures cause an expansion of the thermostatic element which closes the valve, while low temperatures cause a contraction of the element, aided by the spring, which results in opening the valve. Traditionally, the thermostatic actuator has been in the form of a metal rod, having a high thermal coefficient of expansion, or an elastic metallic capsule (bellows) filled with a liquid which expands when heated. In recent years design innovation has introduced a small diaphragm actuator filled with a wax-like substance which expands rapidly at a preselected temperature. This has significantly reduced trap size and increased the speed of response relative to the more traditional design. Figure 3.12 shows the working internals typical of a newer wax capsule expansion trap. Regardless of design variations, these traps have one characteristic in common. The temperature of the condensate they discharge remains constant at a predetermined point and is not a function of steam supply pressure.

All other steam trap types have a condensate discharge temperature that increases with steam supply pressure.
In general, these constant discharge temperature traps respond slowly to changes in temperature and should only be specified where subcooled discharge with resultant condensate back-up is desired.

Advantages
- Rugged.
- Good air handling capability.
- Resistant to freeze damage.
- Withstands water hammer.
- Can be mounted in any position.
- Self-draining.
- Primary failure mode is open.

Disadvantages
- Dirt particles can prevent tight close.
- Requires substantial subcooling.
- Difficult to field check.
- Slow response to changing condensate loads.
- Actuator damaged by exposure to high temperature.

FIGURE 3.12
Wax capsule trap

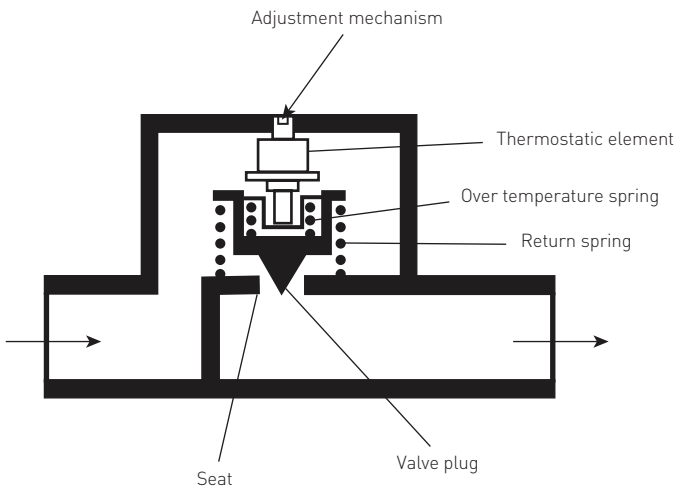

Orifice traps
Orifice traps are seldom used because of their inherent limitations in application range. This device consists of one or more successive orifices. Where two or more orifices are used, condensate passes through a number of successive chambers where flashing occurs. This, in turn, creates a restricting or choking effect and allows the use of larger and less dirt sensitive orifices for a given condensate capacity. In some design executions, these orifices are adjustable valves.

Advantages
- No moving parts.
- Suitable for high pressure application.
- Rugged, withstands water hammer.
- Not damaged by freezing.
- Function not impaired by superheat.
- Can be mounted in any position.

Disadvantages
- Orifice size must be carefully selected for each installation.
- Cannot respond to varying condensate loads.
- Inefficient if oversized.
- Dirt particles readily impair performance.
- Difficult to field check because of continuous discharge.
- In the absence of condensate, the trap passes live steam.

FIGURE 3.13
Fixed orifice trap

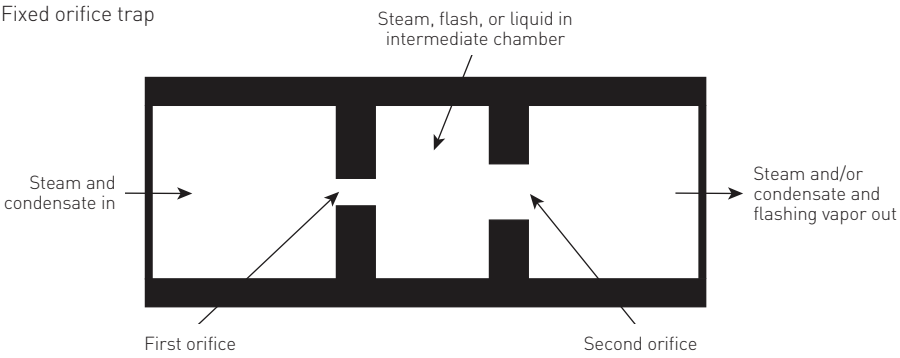

A steam trap designer's comments
Most engineering solutions are a compromise in one form or another and steam traps are no exception. The end result is usually a practical balance between operating characteristics, utility and cost.
In the preceding discussion, inherent advantages and disadvantages associated with the various trap technologies are presented with very few qualifications. However over the years, engineers have been ingenious in finding ways to diminish many of the inherent shortcomings while enhancing many of the advantages. The result has been an extension of the utility of all the various steam trap types.

The influence of standards setting organizations
In recent years, voluntary standards-setting organizations have become increasingly interested in steam trap design, testing and performance. Responsible steam trap designers and manufacturers are guided in their activities by the work of these organizations. The American National Standards Institute's ANSI/FCI Std. 69-1 and ANSI/ASME PTC 39.1 are two standards that presently relate to steam traps in the United States. The former is broadly concerned with the design and safety of steam traps while the latter is specifically focused on the issues of measuring a trap's condensate capacity and steam losses.

SUMMARY

Steam traps are automatic valves that open in the presence of condensate and close in the presence of steam. They should also be able to pass air without passing steam, although some types compromise on this point. Typically they employ one of three basic operating principles – thermostatic, thermodynamic or mechanical – to open or close a valve. Each principle has certain inherent advantages and disadvantages that makes traps of its type more suitable for certain applications than the others. Some trap types combine two principles in an effort to improve overall performance.
A basic understanding of how each type of trap works greatly strengthens the ability to select the optimum trap for each application. It is also essential knowledge when attempting diagnostic troubleshooting of steam traps or steam trapping systems.

CHAPTER 4 – INTRODUCTION

The actual procedure of matching a steam trap to the needs of the application is to perform the 'sizing' first and the 'selection' second. Basic definitions of sizing and selection are presented in that sequence. However, to have a more complete background and understanding of the situation, the Application Range is first discussed in some detail, followed by a discussion on the Selection Process, and then the Basic Sizing Steps. You are also referred to Appendix A for more detailed profiles on specific applications.
Steam trap application is the process of matching a steam trap to the needs of a steam system and its associated equipment.
This involves a two-step process:
1. Sizing it correctly
2. Selecting a suitable type of steam trap
These steps are described in detail in this chapter. However, it must be emphasized that two additional steps are required to assure successful steam trapping results. Chapter 5 discusses the elements that are important to the proper installation of a steam trap and Chapter 6 describes the key to long-term success – proper maintenance.
Sizing and selection of the correct trap for a given application can be complicated by a number of variables, but there are some guiding principles that can make for a logical selection process. They will be discussed in this chapter. Some simplifying rules of thumb, which can be helpful when quick decisions must be made, will also be presented.

Basic definitions

- **Steam trap sizing:** this is the process of choosing a trap which has the capabilities to meet the operating conditions of pressure, temperature and condensate drainage rate for a given application.
  Steam trap sizing has been mistakenly limited by many to matching the end connection size of a trap to the particular pipe size being used to drain a piece of steam heated equipment. Sizing in its correct sense is matching the steam condensing rate (in pounds per hour) of a piece of equipment (at its particular pressure and temperature conditions) to the rated condensate discharge capabilities of a suitable steam trap.
  Trap manufacturers are prepared to make sizing calculations to determine condensate loads in support of their selling efforts. Small plants having only a few stream traps tend to rely heavily on the trap manufacturer for sizing guidance. Engineering contractors and large plants using many steam traps generally make their own sizing calculations. Examples of several sizing calculations are shown later in this chapter.
- **Steam trap selection:** this is primarily the process of choosing the type of trap, from one of the major trap technologies (mechanical, thermostatic, thermodynamic) that will provide the combination of performance characteristics most closely matching the needs of both plant and equipment.
  Selection secondarily includes making judgments about the usefulness of certain accessories and features which are included in some trap designs, as well as making judgments about the advantages of choosing to do business with one trap manufacturer in preference to another.

Trap application range

It is possible to classify steam trap applications in a number of different ways. This book addresses itself to the field of industrial steam trapping in contrast to the steam trapping associated with the low pressure (below 15 psi) heating, ventilating and air conditioning field. There is some overlap, of course, but industry has tended to recognize these two major classifications of users.
Industrial steam trapping applications are themselves typically divided into two major classifications:

Protection service

- **Steam main drip:** drainage of the condensate that normally forms in the pipes delivering steam from a boiler to a specific point of use. This helps prevent damaging water hammer and promotes the delivery of dryer steam to plant equipment.
- **Steam tracing:** drainage of the condensate that normally forms in the small steam lines or steam jackets used to heat valves, field instruments, and the liquids in larger pipelines during freezing conditions or when product temperatures must be maintained at specified levels.

Process service

- **Steam using equipment:** drainage of the condensate that normally forms when steam is used to heat liquids, gases or solids.

These various classifications of steam traps are presented in the simplified matrix shown in Figure 4.1.

FIGURE 4.1
Industrial steam trapping range

Service	Characteristics of service	Application	Description
Protection	Small, steady condensate loads infrequent shutdowns lower pressures (tracing) and higher pressures steam main drips.	Steam main drips.	Drainage of condensate from pipes used to transfer steam from a boiler to its point of use.
		Steam tracing.	Drainage of the condensate that normally forms in the small steam lines used to heat valves, field instruments, and the liquids in larger pipelines during freezing conditions. Or when product temperatures must be maintained above specified levels.
Process	Larger and fluctuating condensate loads. Frequent startups are common, good air handling required.	Steam heats a liquid indirectly through a metal wall.	Shell and tube heat exchangers. Submerged coils. Jacketed kettles.
		Steam heats air/gas indirectly through a metal wall.	Plain or finned coils. Unit heaters or air blast coils.
		Steam heats a solid or slurry indirectly through a metal wall to dry, cure or form.	Rotating cylinders for paper or textiles. Plattens or presses for plastics; particle board and similar materials.
		Steam heats a solid through direct contact to dry, clean or sterilize.	Autoclave. Sterilizer.

FIGURE 4.2
Industrial trapping applications range

	Condensate load			
Steam pressures	**Low** **0 to 100 lb/hr**	**Medium** **100 lb/hr to 1,000 lb/hr**	**Heavy** **1,000 lb/hr to 10,000 lb/hr**	**Very heavy** **over 10,000 lb/hr**
Low 15 psi-100 psi	Tracing and drip	Process applications		
Medium 100 psi-300 psi	Tracing and drip	Process applications		
High 300 psi-600 psi	Drip	Process applications		
Very High Over 600 psi	Drip			

An alternative way of looking at the steam trap application universe is by classifications of steam pressure and condensate load. Figure 4.2 shows the ranges of pressure and load most commonly encountered in different applications. By its very nature such a matrix tends to be arbitrary, but it does show the general picture.
If the number of traps in the industrial world were summarized by steam pressure and condensate load, and listed in the appropriate quadrant of the matrix, the largest numbers by far would be in the low pressure, low condensate load quadrant. The numbers would rapidly decrease as the loads and pressure increase.
Since no single trap design or principle of operation is suitable for use across such a wide range of pressures and condensate loads, preparation of a matrix similar to Figure 4.2 is sometimes used as a technique to assist a large plant in standardizing on the smallest variety of traps for its use. Chapter 6, Maintenance, describes further the process of establishing plant standards.

The steam trap selection process

The steam trap selection process starts with a description of a plant's need. Unfortunately, simply stating that need in terms of equipment to be served – such as a soup kettle, tire vulcanizing press, or an air heater – is not adequate. While it is important information, it is not sufficient to assure that all the requirements of a specific installation will be met in a satisfactory manner.

Selecting a trap, like selecting an automobile, requires an indication of user preference with respect to a rather large number of criteria. Fuel economy versus performance, comfort and safety versus cost, latest style versus an established model with proven reliability are familiar car selecting choices. While the factors that are evaluated in selecting a steam trap are not nearly as familiar, they are no less important in making a successful decision. They can be classified into several levels of importance. Such a list can then be used as a basis for assuring that all the significant requirements of a particular application are considered. Figure 4.3 summarizes and classifies the most significant steam trap selection criteria.

It is important to understand fully the implications of the selection criteria summarized in Figure 4.3 if a systematic selection process is to be successful. The importance assigned to those criteria listed as affecting overall utility will vary from plant to plant and from application to application – and properly so. Conditions vary from plant to plant and application to application. Equally important – perhaps most important – management philosophies vary. All want high system efficiencies and low maintenance costs, but their views vary as to the best way to achieve these objectives. The significant point is that it is the weight or value assigned by the user to the differing criteria that will shape the decision as to whether a mechanical, thermostatic or thermodynamic trap will be selected for a particular application.

A more detailed discussion of the steam trap selection criteria listed in Figure 4.3 is provided below:

- **Safety:** product safety results when a good design is well manufactured and properly used. In the United States, the American National Standards Institute (ANSI) describes for the manufacturer both design and testing standards that relate to factors affecting product safety. Manufacturers can describe installation and maintenance practices they know to be successful, but safety in the plant ultimately rests with the user.

FIGURE 4.3
Steam trap selection criteria

First level criteria	Satisfy primary requirements
• Safety • Efficiency • Service life	These criteria are least subject to compromise. All trap types (mechanical, thermostatic, thermodynamic) are capable of providing excellent performance in a range of applications when properly sized and installed.
Second level criteria	**Affect overall utility**
• Ease of checking • Sensitivity to back pressure • Resistance to freeze damage • Dirt sensitivity • Installation versatility • Air venting • Responsiveness to changing loads • Resistance to shock vibration and water hammer • Predominant failure mode • Discharge mode • Condensate discharge temperature relative to saturation curve • Magnitude of condensate subcooling • Ease of maintenance • Supplementing accessories or features	These criteria relate to a steam trap's overall utility. The differences between mechanical, thermodynamic and thermostatic trap designs are significant. Each trap type has its strengths and weaknesses. These second level criteria are of particular interest to the user who is looking beyond 'first cost' and who makes an evaluation based on 'installed' or 'life cycle' costs.
Third level criteria	**Commercial considerations**
• Product availability • Post-sales service • Warranty • Price	These are the commercial criteria that lead to the selection of one supplier over another.

- **Service life:** a long lasting steam trap is obviously desirable. Regardless of design, however, every steam trap's life is shortened as steam pressures and temperatures increase. Hot condensate is a particularly difficult liquid to handle. It can be both corrosive and erosive and, under certain conditions, it can cause cavitation. It can destroy valves and seating faces in a matter of days in extreme circumstances. The frequency with which a trap must open and shut also obviously influences its life span. Opposing these destructive forces are the designer's skills, hardened materials and the level of special concern a plant has for selecting and sizing traps suitable for the conditions they will experience.
- **Efficiency:** the most efficient steam trap is one that has failed in the closed position because it wastes no steam. Obviously efficiency can not properly be considered without reference to how a trap performs its other functions. Claims that one trap type is more efficient than another are as difficult to support as they are to refute. Given a calorimeter test in a laboratory, virtually every major trap type can achieve efficiencies of or close to 100%. In fact, the differences in efficiency between traps will often be unmeasurable because they are less than the accuracies of the testing equipment.

If there is one trap type that is theoretically superior from the standpoint of efficiency, it is probably the thermostatic because its opening temperature can be below steam temperature. As a consequence, it can be made to back up sufficient condensate that steam is unable to reach the trap and pass through it in normal service. This condensate backup, however, is not always desirable because it may adversely affect the efficiency of the system. Thermal efficiency of the steam system in which a steam trap is installed is more important to the user than the efficiency of the steam trap. A steam trap may be very efficient but if it backs condensate into a heat exchanger – thereby reducing system efficiency – it is unsuited for this particular application. The same trap backing up condensate in certain tracing applications can be contributing to system efficiency by utilizing the sensible heat in the condensate. Clearly, steam trap efficiency is very important, but overall system efficiency is even more important, and steam trap selection should be made with this fact in mind.

- **Ease of checking:** considering the difficulties inherent in detecting whether a steam trap is performing properly (see Chapter 6 'Maintenance'), it is surprising more consideration isn't given to this criterion. A trap that has a crisp open-close cycle can quickly be judged to be healthy with a simple listening device. Traps that modulate or have a slower and softer open-close cycle often leave the steam trap checker uncertain about their condition. "Is it capable of shutting off tightly?" is the nagging question. As a group, traps that normally provide modulating control such as the float and thermostatic or the bimetallic thermostatic are more difficult to check than other trap types.
- **Sensitivity to back pressure:** traps discharging into closed condensate return systems will experience varying amounts of back pressure, depending on the return system's design and the number and condition of other traps discharging into it. Most bimetallic traps will discharge condensate at progressively cooler temperatures as they experience increasing back pressures. Thermodynamic traps tend to decline in efficiency as back pressures exceed 50% of the inlet pressure.
- **Resistance to freeze damage:** steam lines shut down for maintenance or by accident, or condensate return lines reduced to very slow or sluggish flow because of dirt or accumulated scale, are all subject to freezing in cold weather. The degree of concern by plant managers for damage to equipment and lost production is quite different between the Gulf Coast and Canada for obvious reasons. Some steam traps are inherently more susceptible to damage by freezing than others by virtue of their design and materials of construction. Cast iron body bucket and float traps are not popular for use out of doors in cold climates because they require an internal water reservoir which makes them especially vulnerable to freezing problems. In addition, the piping configuration used for their installation often makes system drainage difficult. By contrast, bimetallic thermostatic and thermodynamic traps are free of this problem.
- **Dirt sensitivity:** all steam traps can be put out of commission by pipeline scale, pipe joint sealants, oxide build-up or similar forms of contamination. Typically, dirt is caught between a trap's valve and seat. This prevents tight shut-off, allows steam leakage and very quickly causes permanent erosion damage to these sealing faces. Some thermostatic, thermodynamic and bucket traps will have their smaller passage or vent holes closed by oxide build-up. Knowledgeable engineers will carefully consider the relative susceptibility of various trap types to contamination by dirt before selecting a trap for their plant.
- **Installation versatility:** some steam trap models (such as thermostatic or thermodynamic types), can be installed successfully in either a horizontal or vertical line. This simplifies the inventory, storekeeping and installation problems of the plant. Mechanical traps do not easily lend themselves to this flexibility of use, thus often creating the need for specific models for installation into either horizontal or vertical lines.

- **Air venting:** in startup situations, air must be vented from pipe lines and equipment before steam can enter it. The faster it is vented, the more quickly equipment is brought up to temperature. Some steam traps – such as thermostatic types – pass air very quickly under these conditions, while thermodynamic disc traps and bucket traps release air much more slowly. If equipment is started and shutdown frequently, as in many process applications, good air venting is an especially important consideration in determining the type of trap to be installed.
  Installations which operate around the clock for months at a time are less concerned with this special startup capability, but they still require the ability to pass non-condensable gases such as carbon dioxide (CO_2) that may accumulate in a condensate return system.
- **Responsiveness to changing loads:** not all trap types accommodate themselves quickly to the changing condensate loads typical of process applications. Mechanical and thermodynamic traps are very responsive, but thermostatic traps must first cool slightly before they can open wider to pass a greater amount of condensate. An adequate "cooling leg" is required in front of thermostatic traps to assure good system efficiency.
- **Resistance to shock, vibration and water hammer:** despite the system designer's best efforts, all steam systems tend to experience some level of vibration, shock, or water hammer. Startups, pressure changes or changing loads, are the periods that generally are the hardest on equipment such as steam traps. Not all traps, however, are equally vulnerable to damage from these causes. Thermodynamic traps and bimetallic thermostatic traps are generally very rugged. The bellows in thermostatic traps and the closed float in some mechanical traps are fragile and damage-prone. These damage producing conditions are most frequently seen in process applications.
- **Predominant failure mode:** all traps are susceptible to failing closed when plugged with dirt. But, apart from this special case, some types of trap normally fail in the open position while others will typically fail in the closed position. Thermodynamic traps and bimetallic traps fail open when they are worn out. Bucket traps tend to have an unpredictable failure mode as they can fail in the open position with a loss of prime, or they can fail closed if the bucket vent becomes clogged or the trap experiences pressure differentials above that allowable for the trap's orifice size. Bellows thermostatic traps will fail either open or closed depending on the design of the bellows if the bellows is damaged.
  Opinions differ concerning the desirability of one failure mode over the other. A trap 'failed closed' is not losing steam. On the other hand, a trap however wasteful, that has failed open, maintains condensate drainage and therefore has not interfered or disrupted the process. In general, it would seem that preserving the process is the higher need and a trap that fails open is more desirable than one that fails closed.
- **Discharge mode (cyclic or modulating and continuous):** does a trap that has a distinct open and shut cycle provide inherent advantages or disadvantages relative to one that has a continuous and modulating discharge? The cycling thermodynamic disc and bucket traps are easier to check for proper performance, and perhaps better at passing dirt particles. On the other hand, the continuous draining float trap is especially responsive to rapidly changing condensate loads and it does not contribute to pressure surges in the return system. The judgment as to which is the superior trap depends on the relative value that the plant operator assigns to these various characteristics.
- **Condensate discharge temperature relative to the saturation curve:** the temperature of condensate immediately in front of a steam trap at the moment it opens is called the condensate discharge temperature. Of course the trap is expected to close after the accumulated condensate has been drained and before live steam can be discharged. In general, it is desirable that this opening and closing cycle take place at temperatures very close to that of saturated steam. As the temperature of saturated steam varies with its respective steam pressure (see steam saturation curve, Figure 2.5), it is very desirable that a trap be able to accommodate these changing conditions. A trap that does this well is said to 'follow or parallel the saturation curve' and is a more versatile device and more easily applied than one that does not. Mechanical, some bellows thermostatic, and most thermodynamic traps follow the saturation curve closely. Bimetallic traps can be designed to 'follow the saturation curve' approximately, but they do not provide the same range of performance that can be expected with the other trap types.

- **Magnitude of condensate subcooling:** the terms 'subcooling' and 'suppression' refer to the temperature difference between that of condensate at the moment the trap starts to open and the temperature of saturated steam (at the same pressure). For example, a trap operating at 100 psi (steam saturation temperature 338°F) and designed for 10 degrees subcooling will not start to open until the temperature of condensate at the trap drops to 328°F. A trap with little subcooling or suppression will discharge condensate within two or three degrees of steam temperature, while a trap with a large amount of subcooling will discharge condensate at temperatures 30°F or more below steam temperature. Under most circumstances it is desirable to discharge condensate as soon as it forms as this helps in the achievement of steady temperature control. This fact leads to the general desirability of a 'hot' trap i.e., one with only two or three degrees of subcooling or suppression. Because hot traps discharge condensate almost as soon as it arrives, they are rapidly responsive to changing condensate loads. Condensate is not held back until it cools 20°F or 30°F before the trap opens, as is the case with some of the more slowly responding trap types.
  There are a number of applications in the area of tracing where the heat in highly subcooled condensate is adequate for the warming job to be done. Under these conditions a 'cool' trap will tend to improve overall system efficiency provided the system has been specifically designed to achieve this objective. It is the requirement of the equipment being served by the steam trap that will establish whether one level of subcooling is more desirable than another.
- **Ease of maintenance:** all steam traps fail in time. it is a matter of management philosophy whether they are repaired or scrapped and replaced. While steam traps are available in both repairable models and throw-away versions, the longer economic view favors repairability. This preference has encouraged several manufacturers to design traps that significantly simplify the maintenance task.
- **Supplementing accessories or features:** steam traps may be purchased with a variety of features that increase their life or utility. Strainers integral to the trap body protect the trap mechanism from dirt and simplify field installations. Integral blowdown valves clean the strainer and help with system troubleshooting. Integral check valves provide system protection, sight glasses aid in verifying proper trap performance, temperature adjusting capability is available with some bimetallic traps and auxiliary thermostatic air vents can be added to certain bucket traps to improve their air handling capability. Each option requires evaluation based on its merits and the needs of the application and installation.

The steam trap sizing process

Regardless of whether a mechanical, thermostatic or thermodynamic trap is selected for a particular application, its satisfactory performance will depend on it being sized properly for the pressures, temperatures and condensate loads it will experience.
For instance:

- **Pressure and temperature:** safety is obviously the first consideration. No trap should be used unless its pressure and temperature rating equals or exceeds that of the system into which it will be installed. Mechanical traps, such as bucket or float traps, frequently have a maximum operating pressure that is well below its maximum design pressure rating. The trap's utility is correspondingly restricted to the smaller rating. These important design and operating limitations of pressure and temperature are marked on a trap's body or nameplate.
- **Capacity:** the basic objective of the sizing process is to select a steam trap that will have a suitable capacity for passing the condensate created by the particular piece of equipment being drained. Selecting a trap with too small a capacity will cause the backup of condensate, effectively reducing the area of steam exposed heat transfer surface. This reduces total system efficiency and increases freezing and water hammer risks. Selecting a trap with too large a capacity, or 'oversizing', not only involves buying a larger and more costly trap than necessary, but tends to result in traps that do not close well and have a shorter than normal service life. In turn when they fail, they are large wasters of steam.

Factors that affect a steam trap's capacity

A trap's capacity to pass condensate is basically determined by three factors: (1) orifice or seat size; (2) pressure differential between the inlet and outlet ends; (3) temperature of condensate. Because these factors are variables, a trap's capacity can properly be stated only if the differential pressure and condensate temperatures are also stated. The manner in which these factors variously influence a trap's capacity is described below:

- **Orifice or seat size:** this has been carefully established by the trap designer with certain applications in mind. In the mechanical and thermodynamic trap, this orifice is fixed in size. In thermostatic traps (especially bimetallics), the net orifice area effectively varies in size as temperature changes slowly move the valve into or out of the seat.
- **Differential pressure:** it seems obvious that the amount of flow through an orifice will depend on the difference in pressure between its inlet and outlet. Less obvious (especially in very large industrial complexes with miles of steam lines) is what these pressures are in many steam trap applications. In such installations, there are many operating reasons why line pressures will vary. Traps discharging immediately to atmosphere have only the inlet pressure in doubt. Traps discharging into closed condensate return systems have the added uncertainty of the level of back pressure in that system. The significance of these uncertainties is that properly sizing a steam trap for such conditions is made more difficult.
- **Condensate temperature:** the curves in Figure 4.4 graphically show how much the capacity of a steam trap can vary simply because of changes in the temperature of condensate coming to it. It can be seen that for a given pressure, the discharge capacity of a trap will increase as the condensate temperature decreases below that of steam temperature. A steam trap under startup conditions, discharging 200°F water, can have four times more capacity than when discharging condensate near steam temperature (say, at 340°F).

The basic sizing steps

- **Step 1:** Determine the inlet and outlet pressure conditions of the trap.
- **Step 2:** Calculate the condensate load produced by the equipment being drained.
- **Step 3:** Select a suitable safety load factor.
- **Step 4:** Solve the equation: (condensate load) x (safety load factor) = desired trap capacity.
- **Step 5:** Choose trap from manufacturer's catalog with appropriate pressure and capacity ratings.

The basic sizing steps – in detail

In order actually to perform steam trap sizing calculations, more information is required. A detailed description of the sizing steps is given below:

- **Step 1:** Determine the pressure conditions at the trap.

Pressure at the inlet of the trap will often be considerably less than that generated at the boiler. Pressure reducing valves, cascading systems, line losses and condensing rates all work to reduce pressure in the system before the trap. While it is always important to know the inlet pressure a trap will experience, it is especially true in sizing mechanical types such as bucket or float traps. Their operating principle requires the weight of the bucket or float to open their valve. Should differential pressures be above the rating of the trap, it will fail in the closed position.

Pressure at the outlet of the trap will range from below atmospheric to near inlet pressures depending on the design of the condensate collection system and the performance of other equipment connected to it. The effect of back pressure on a trap's performance is an important selection criterion. For example, excessive back pressures upset the normal pressure temperature balance of most bimetallic traps; the increased closing force results in increased condensate back-up and increased condensate subcooling. As back pressures increase beyond design limits, thermodynamic traps will remain in the open position.

FIGURE 4.4
Steam trap capacity changes

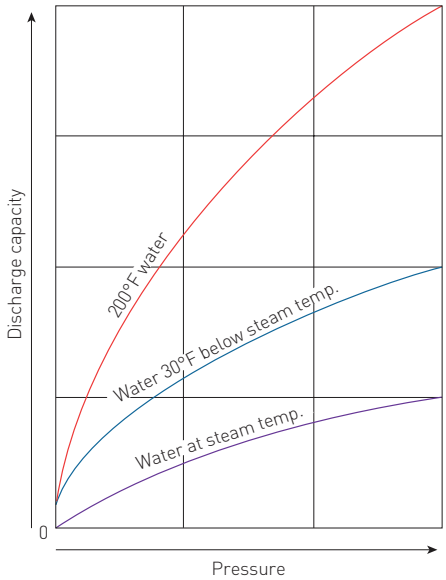

• **Step 2:** Calculate the condensate load to be handled – process traps

Various formulas are used to calculate condensate loads depending on the nature of the application. Some are technically more accurate than others because they employ fewer assumptions about the operating conditions but, in general, most provide acceptable approximations. There are four broad classifications of heating equipment discussed on the following pages:

1. Steam heats a liquid indirectly through a metallic wall

Typical examples: cooking coils, storage tanks, jacketed kettles, stills

The following simple formulas are generally satisfactory for quickly estimating condensate loads when heating water or a petroleum product:

Water being heated:

$$C = \frac{Q \times (T_2 - T_1)}{2}$$

A petroleum product being heated:

$$C = \frac{Q \times (T_2 - T_1)}{4}$$

When:

C = condensate load in lb/hr
Q = quantity of water being heated in gal/min
Q = quantity of petroleum being heated in gal/min
T_1 = initial temperature of liquid being heated in degrees
T_2 = final temperature of liquid being heated in degrees

A more detailed formula is appropriate when other liquids are being heated:

$$C = \frac{Q \times 500 \times S_g \times S_h \times (T_2 - T_1)}{H_{fg}}$$

When:

C = condensate load in lb/hr
Q = quantity of liquid being heated in gal/min
S_g = specific gravity of heated liquid
S_h = specific heat of liquid being heated in British Thermal Units per pound per degree (BTU/lb/°F)
H_{fg} = latent heat of vaporization in BTU/lb
500 = constant, for converting gallons per minute to pounds per hour

Example: determine the condensate load in pounds/hour that results from heating a liquid with a specific gravity of .93 and a specific heat of .47 (BTU/lb/°F) from 65°F to 225°F at the rate of 25 gallons per minute. Assume a steam pressure of 50 psi. The constant 500 may be used to convert gallons per minute to pounds per hour. The latent heat of steam at 50 psi is found in the steam tables in Appendix D to be 912 BTU/lb.

Substituting into the preceding equation results in the following:

$$C = \frac{25 \times 500 \times .93 \times .47 \times (225 - 65)}{912}$$

C = 958 lb/hr

2. Steam heats air or a gas indirectly through a metallic wall

Plain or finned heating coils and unit space heaters are common examples

The following formula provides a quick and approximate basis for estimating condensate loads for this type of equipment.

$$C = \frac{SCFM \times (T_2 - T_1)}{900}$$

A more detailed formula will provide a more accurate estimate of condensate load:

$$C = \frac{SCFM \times D_v \times S_h \times (T_2 - T_1) \times 60}{H_{fg}}$$

Where:

C = condensate load in lb/hr
SCFM = uantity of air or gas being heated in standard ft^3/min
D_v = density of gas in lb/ft^3 (0.75 air)
S_h = specific heat of gas being heated in BTU/lb/°F
T_1 = initial temperature of gas being heated in degrees
T_2 = final temperature of gas being heated in degrees
H_{fg} = latent heat of vaporization in BTU/lb
900 = constant that assumes a typical specific heat, density, latent heat and a conversion of minutes to hours
60 = minutes in an hour

3. Steam heats a solid or a slurry indirectly through a metallic wall

Clothing presses, cylinder driers for textiles or paper and platen presses for plastics are typical

The formula shown below is suitable for estimating the condensate loads associated with this type of equipment. The constant 970 is the latent heat of vaporization at atmospheric pressure (reference steam tables, Appendix "C"). It is included because the drying process by definition requires that the moisture in the product be evaporated.

$$C = \frac{970 \times (w_1 - w_2) + w_1 \times (T_2 - T_1)}{H_{fg} \times t}$$

When:

C = condensate load in lb/hr
w_1 = initial weight of product being dried (lb)
w_2 = final weight of product being dried (lb)
T_1 = initial temperature of product in degrees
T_2 = final temperature of product in degrees
H_{fg} = latent heat of vaporization in BTU/lb
t = time required for drying (hr)

4. Steam heats a solid through direct contact
This is most frequently done in a sterilizer or a steel chamber called an "autoclave"
The following formula may be used for estimating condensate loads when this type of equipment is being used. It should be remembered that the surrounding equipment will also create a large condensate load at startup. The same equation may be used to estimate this load,

$$C = \frac{w \times S_h \times (T_2 - T_1)}{{}_{fg} \times t\ H}$$

When:
C = condensate load in lb/hr
w = weight of material heated in lb
S_h = specific heat of material being heated in BTU/lb/°F
T_1 = initial temperature of material being heated in degrees °F
T_2 = final temperature of material being heated in degrees °F
H_{fg} = latent heat of vaporization in BTU/lb
t = time to reach final temperature of material being heated in hr

• **Step 2 continued:** Calculate the condensate load to be handled – protection traps

Steam main drip service
In each of the preceding conditions, the objective has been to heat a liquid, air, gas or some other product. The steam is being condensed to serve a useful purpose. In considering condensate formation in steam mains, the reverse IS true. Every effort is made to minimize the formation of condensate as it is wasted heat. The condensate forms because of heat loss through the wall of the pipe and its surrounding insulation. Steam traps in steam main drip service are filling a need common to every steam system, regardless of the purpose for which the steam is being generated. Standard formulas exist for calculating condensate loads during warming or startup conditions for steam mains and also for steady running conditions.

Steam main warming load

$$C_1 = \left[\frac{L_p \times w_p \times .12 \times (T_2 - T_1)(1.1)}{H_{fg} \times t} \right] + [(.5)(C_2)]$$

When:
C_1 = condensate load in lb/hr
L_p = length of pipe in ft
w_p = weight of pipe in lb/ft
.12 = specific heat of steel in BTU/lb/°F
T_1 = initial temperature of pipe in degrees
T_2 = final temperature of pipe in degrees – use steam saturation temperature (°F)
H_{fg} = latent heat of vaporization in BTU/lb
t = time for warm up in hr
1.1 = constant to accommodate warming of insulation

Steam main running load

$$C_2 = \frac{L_p \times A_p \times (T_p - T_a) \times U \times I_f}{H_{fg}}$$

When:
C_2 = condensate load in lb/hr
L_p = length of pipe in ft
A_p = external area of pipe in ft^2
T_p = temperature of pipe in degrees °F
T_a = ambient temperature in degrees °F
U = heat transfer coefficient of steel in BTU/hr/ft^2/°F. A value of 3 is frequently used for steel pipe in still air.
I_f = insulation factor equal to 1 minus insulation efficiency
H_{fg} = latent heat of vaporization in BTU/lb

Example: determine the warming and running loads for 100' of 4" schedule 40 steel pipe when raised from 40°F to saturation temperature at 100 psi. Assume a warm-up rate of 200°F/hr, a heat transfer co-efficient for steel of 3 and insulation of 85% efficiency. The specific heat of steel is .12. Weight of 4" pipe per foot is 10.79 pounds and its external area in square feet is 1.178 (reference tables in Appendix D). The latent heat of steam (881 BTU/lb) at 100 psi is found in the steam tables in Appendix D.

Steam main warming load (example)

$$C_1 = \left[\frac{L_p \times w_p \times .12 \times (T_2 - T_1)(1.1)}{H_{fg} \times t} \right] + [.5C_2]$$

$$C_1 = \left[\frac{100 \times 10.79 \times .12 \times (338 - 40) \times 1.1}{881 \times 149} \right] + [8.95]$$

C_1 = 41.3 lb/hr

$$t = \frac{338 - 40 = 1.49\ hr}{200}$$

Steam main running load (example)

$$C_2 = \frac{L_p \times A_p \times (T_p - T_a) \times U \times I_f}{L}$$

$$C_2 = \frac{100 \times 1.178 \times (338 - 40) \times 3 \times (1 - .85)}{881}$$

C_2 = 17.9 lb/hr

Appendix A provides tables that may be used for making estimates of the condensate load created in insulated steel pipe at various operating pressures.

FIGURE 4.5
Typical tracer condensate loads in lb/hr/100 ft of pipe and product temperature between 100°F and 200°F, stream pressure 100 psig.

	Product pipe size, in					
Ambient temp. °F	**4**	**8**	**12**	**16**	**20**	**24**
-20	4-8	8-14	10-19	14-25	17-31	20-37
20	3-9	5-15	7-20	9-26	11-32	13-38
60	2-7	3-12	4-16	5-22	6-27	7-32

Assume wind velocity of 0 mph, insulation efficiency 85% and no heat transfer cement

Steam tracing service
Supplemental heat is often provided to protect piped fluids from freezing or becoming so viscose that handling becomes difficult or impossible. Valves, controls and instruments also are commonly 'traced' to assure cold weather does not prevent their satisfactory performance. The principles involved in calculating the condensate loads for tracer lines are similar to those associated with calculating the running loads of steam mains. Experience shows these loads to be very small, as can be seen in Figure 4.5.

• **Step 3:** Select a suitable safety load factor
The safety load factor is a number. It is based on the judgment of an individual with experience in steam trapping and is used in trap sizing calculations to compensate for the lack of exact knowledge about the condensate load a trap will actually experience.

Technically the safety load factor may be defined as:

$$\text{Safety load factor} = \frac{\text{Rated capacity of steam trap}}{\text{Calculated condensate load of application}}$$

Estimates of condensing rates in the heat exchange equipment are rough approximations at best. Pressure and condensate temperature estimates are often significantly in error because of unexpected or uncontrollable system variances or fluctuations.

It is human nature to err on the side of selecting overly conservative safety load factors. It is unfortunate that the problems resulting from oversizing take longer to become visible than those from undersizing.

FIGURE 4.6
Typical relationships between the heating function being performed by the steam, the type of equipment being used, the system characteristics and a reasonable safety load factor. Reviewing such a matrix can help form the judgment necessary to select a suitable safety load factor.

Equipment being drained			Safety load factor	
			Pressure	
Function	**Type**	**Significant characteristic**	**Constant pressure**	**Variable pressure**
Heating liquid	Batch stills, shell and tube heaters, tank coils, vats	Gravity drainage	2	3
	Tilting kettle, shipboard tank	Syphon or lift drainage	3	4
Heating air	Unit heaters, pipe coil radiators, process air heaters	Ambient air above freezing	2	3
		Ambient air below freezing	3	4
Drying or curing	Platen, chest type ironer	Gravity drainage	3	-
	Cylinder dryer, paper machine	Syphon drainage	5	-
	Autoclave sterilizer	Normal warm up	3	-
		Fast warm up	5	-
Transfer steam to point of use	Main drip	Small condensate load	1*	-
Provide auxiliary heating to controls and process piping	Tracing	Small condensate load	1*	-

* Theory would suggest that a safety load factor of (1) is bad practice. However, experience establishes that trap manufacturers seldom design a steam trap for these light load services with a suitably small seat orifice because it is so easily blocked with dirt or oxides in normal service.

• **Step 4:** Solve the equation
Condensate load (lb/hr) x Safety load factor = Desired trap capacity (lb/hr)
The product of the calculated condensate load and the estimated safety factor is the trap capacity that forms the basis for choosing a correctly sized trap.

• **Step 5:** Choose a trap from the manufacturer's catalog
Manufacturers generally provide their sizing capacity data in graphic form indicating the pressure and condensate temperature at which the rated capacity is stated to exist. As an example, Figure 4.7 shows capacity curves typical of a bimetallic trap having medium to heavy capacity.
Temperatures may sometimes be stated as "near steam temperature" or "within 10 degrees of saturation temperature."

These generalizations result from the fact that obtaining very accurate data is difficult even in a well equipped laboratory because of the difficulty in providing sufficient amounts of condensate at constant temperature. "Cold water" ratings are sometimes stated because they are easiest to obtain and because they give an indication of a trap's capacity during a startup situation.
Choose a trap with a capacity close to the calculated capacity for the pressure conditions and, of course, the proper sized end connections. Remember that while the calculated load can be carried out to the second decimal place, it is at best a rough approximation and that unexpected system variables may upset an otherwise good selection.

FIGURE 4.7
Steam trap capacity

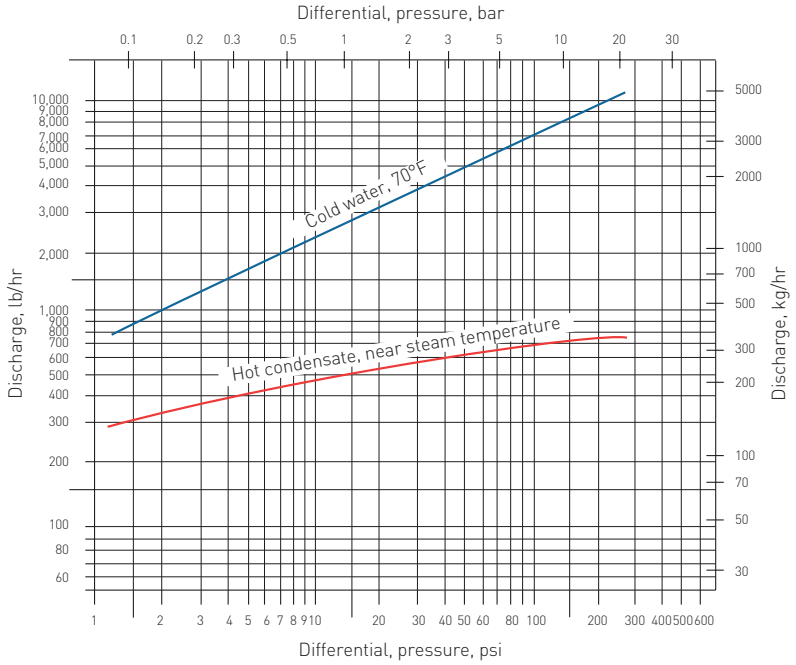

YARWAY MODEL 40

SUMMARY

Steam trap application is the process of first, sizing it to meet the specific condensate drainage requirements of a particular piece of equipment, and second, selecting a type of steam trap.

- **Steam trap sizing** is the process of matching the condensate drainage requirements of a particular piece of equipment with a steam trap's condensate handling capacity at the pressure and temperature conditions to which it will be exposed.

Standard formulas exist to calculate the condensate loads that process traps will experience when serving any of the following four classes of equipment:

- Heats a liquid indirectly through a metal wall.
- Heats air or a gas indirectly through a metal wall.
- Heats a solid or slurry indirectly through a metal wall.
- Heats a solid through direct contact.

Condensate loads experienced by protection traps in tracer and steam main drip service can also be calculated by the use of standard formulas. These loads are generally quite small and experience has shown that trap oversizing is a common problem.

Calculated condensate loads for process traps are normally increased by a safety load factor to compensate for system unknowns. Guidelines exist to aid in the selection of safety load factors. In general, the more that is known about the conditions associated with an application, the smaller will be the size of the factor.

- **Steam trap selection** is the process of evaluating the relative advantages and disadvantages associated with each of the basic trap technologies (thermostatic, thermodynamic and mechanical), and matching them with the needs or criteria of the plant in which they will be used. These needs, or selection criteria, create a surprisingly long list:
- Safety
- Efficiency
- Service life
- Ease of checking
- Sensitivity to back pressure
- Resistance to freeze damage
- Dirt sensitivity
- Installation versatility
- Air venting
- Responsiveness to changing loads
- Resistance to shock, vibration and water hammer
- Predominant failure mode
- Discharge mode
- Condensate discharge temperature relative to saturation curve
- Magnitude of condensate subcooling
- Ease of maintenance
- Supplementing accessories or features
- Commercial considerations

Selection of a thermostatic, thermodynamic or a mechanical type trap for a particular service will necessarily depend on the criteria considered most important for satisfactory plant operation, as each trap technology has its unique advantages and disadvantages.

CHAPTER 5 – INTRODUCTION

A steam trap that fails to perform as expected is not necessarily faulty. Often 'trap problems' are directly traceable to 'piping system problems'. There are general piping system practices that must be followed if certain basic steam trapping problems are to be avoided. While some pieces of heat exchange equipment have rather special piping requirements to achieve good trap performance, most do not. This chapter addresses the generalized rules for good piping practice and proper steam trap installation. Recommendations for trapping specific pieces of equipment are described in Appendix A.

A review of the problems affecting steam trap performance

'Good practice' evolves as knowledge is gained about the cause of problems and the techniques that are developed to avoid their repetition in the future. As background to a consideration of steam trap installation principles, it is helpful to review the most common problems associated with trap performance:

Problems:

- **Water hammer**
  Comment: slugs of water hurtling through a piping system not only damage steam traps, but also other valuable equipment including the piping system itself. Good piping practices promote good drainage and prevent the accumulation of water that makes water hammer possible.
- **Freeze-ups**
  Comment: a shutdown in freezing conditions of a system that drains poorly, for whatever reason, is an invitation to trouble. In extremely cold conditions, poorly insulated condensate return systems can freeze. Even if equipment is not damaged by ice, seldom the case, startups become extremely tedious because ice blockages prevent the circulation of steam necessary to bring the system up to temperature. Valuable production time is lost.
- **Dirt**
  Comment: by their nature, steam traps generally have small passages that are subject to obstruction. Corrosion products and pipeline trash are the usual culprits. A clogged steam trap means trouble because it is no longer able to protect or drain the equipment it was meant to serve. Dirt pockets and strainers help to protect the trap.
- **Air binding**
  Comment: at startup time, steam systems can be full of air. Some mechanical and thermodynamic traps have difficulty differentiating between steam and air. When such traps restrict the proper venting of air and delay the heating up of the system, they are considered to be 'air binding'. Thermostatic air vents and thermostatic traps are commonly used to improve air venting.
- **Steam binding**
  Comment: certain applications, piping configurations and steam trap types tend to create conditions in which steam at the trap keeps it closed, thereby preventing condensate which has formed upstream of the trap from being drained.
- **Back pressure**
  Comment: small levels of back pressure typical of a properly designed condensate return system are not generally a problem. It is the elevated levels of back pressure found in the inadequate return system that creates drainage problems.
- **Corrosion**
  Comment: corrosion is best controlled by proper boiler water treatment but any piping arrangements that interfere with good drainage increases the potential for corrosion problems.

YARWAY MODEL 515

The steam trap station – some basics
Figure 5.1 shows a typical steam trap installation in a closed condensate return system.
Several of its features will apply to any installation, specifically:

- **Strainers with blowdown valves:** dirt is the enemy and unless a steam trap has an integral strainer, as many now do, it should have a strainer installed immediately upstream. The blowdown valve which permits easy cleaning of the strainer screen often sees service as a useful diagnostic tool when a system or piece of equipment is slow to heat up.
- **Test 'T':** regular verification that a steam trap is functioning properly is common practice in all well maintained plants. Chapter 6, Steam trap maintenance, has a section on steam trap checking that describes the usefulness of a test 'T' for verifying proper performance of a trap discharging into a closed return system.
- **Isolation valves:** isolation valves are necessary to permit the inevitable repair or replacement that all steam traps ultimately require. They are also required when using the test 'T'. Valves should be fully ported – such as ball or gate valves – to minimize pressure drops that cause condensate flashing or raise back pressures.

Steam trap location – the inlet piping and outlet piping
Steam traps should be installed one or two feet below the outlet of the equipment being served with the inlet piping sloping towards the trap to facilitate gravity drainage. A drip or dirt leg that is the same size pipe as the equipment drain connection will help provide clean condensate and also serve as a condensate collecting reservoir. Pipe and fittings ahead of the trap should be equal to or one size larger than the trap to reduce the potential for the formation of flow interrupting flash steam. Discharge piping should be amply sized to accommodate flash steam and minimize back pressure. For short discharge lines, use pipe equal to trap size; for longer lines use one pipe size larger.
When it is not possible to install a trap below the low point of the equipment being drained, a lift fitting or water seal is necessary. This may take the form of either a 'U' shaped lift fitting or a small pipe or tube within the larger coil (see Figure 5.2).
Without such an arrangement, steam is able to reach the trap and keep it closed (steam binding) before the coils have been adequately drained. The trap should be located below the high point of the loop going over the side of the tank. A check valve is installed just ahead of the trap to prevent back flow into the coil.

FIGURE 5.1
A typical steam trap installation

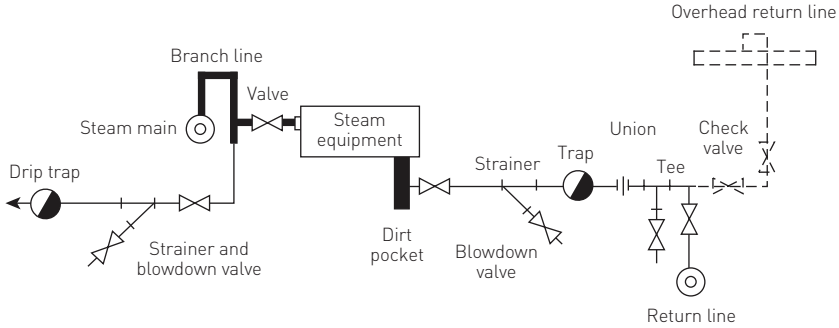

FIGURE 5.2
A lift fitting application

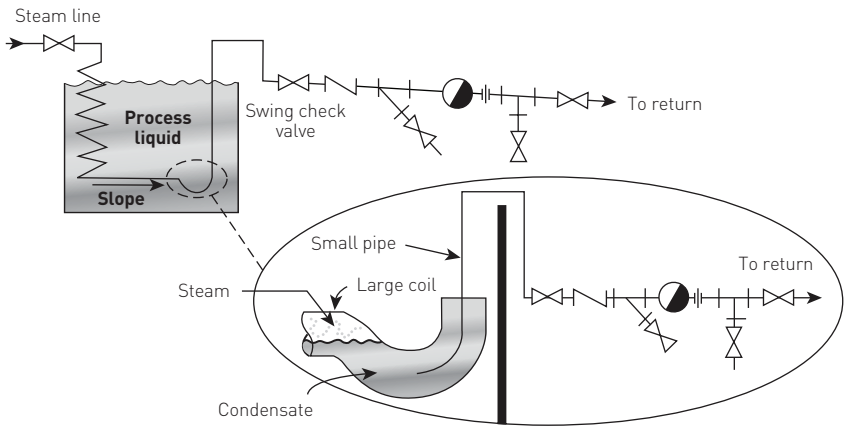

The steam distribution system drainage and trapping

Good drainage of steam mains and branch lines is mandatory. A piping system that sags or otherwise allows pockets of condensate to form, creates the conditions that cause water hammer and its associated damage. Such systems when shut down in freezing climates experience additional problems because of unwanted ice formation. All natural drainage points arid low points in a steam line or main require a steam trap and, in fact, steam main drip service is the most common trap application. Where long pipe runs exist without natural drainage points, they need to be created in the form of drip pockets at intervals of approximately 300 feet. Drip pockets should be the same diameter as the main or branch line as this helps prevent condensate from being carried past the pocket by high velocity steam. Drip pockets and drip traps should be placed upstream of temperature control, pressure reducing, and stop valves to prevent damage and assure dry steam supply to equipment. Drip traps are also required at expansion joints and loops and the terminal ends of steam mains.

The steam main itself should have a slope of about one inch in twenty feet to facilitate condensate drainage by gravity.

Steam supply lines should always be tapped off the top of the steam main. This helps deliver dry steam to the equipment (see Figure 5.1).

Steam separators

Separators perform a job that steam traps cannot do. Steam traps drain condensate that has collected at a drainage point. Steam separators (or steam dryers) remove water droplets that are entrained in the steam flow. They are installed in the steam main immediately down-stream of the boiler, to improve the quality of steam going into the distribution system, or immediately ahead of equipment that requires especially dry steam. Steam separators, in turn, are drained by a steam trap.

The condensate return system

The primary purpose of a condensate return system is to save the expense of continually upgrading water to a quality suitable for good boiler performance and to recover heat energy still in the condensate, thus improving overall system efficiency. In addition, condensate return systems afford the opportunity to use flash steam in progressively lower pressure heating systems. Condensate return is discussed in detail in Chapter 7.

While the benefits of a return system significantly outweigh the problems associated with it, such a system does allow the formation of a back pressure against which steam traps must discharge. Back pressure at moderate levels is not a problem but at levels of 50% or more of inlet pressure, it can adversely affect the performance of bimetallic and thermodynamic traps. The discharge temperature of bimetallic traps become extremely suppressed, creating significant condensate backup. Thermodynamic traps become less efficient i.e., begin to pass steam. The significance of these comments is simply to establish that piping factors which increase the back pressure against which a trap must discharge, also increase the potential for unexpected trapping problems.

A common cause of excessively elevated back pressures in a return system is the plant expansion that increased the number of steam traps discharging into the system without also having increased its size to accommodate the additional flash steam.

FIGURE 5.3
A condensate return system showing the collection and use of low pressure flash steam

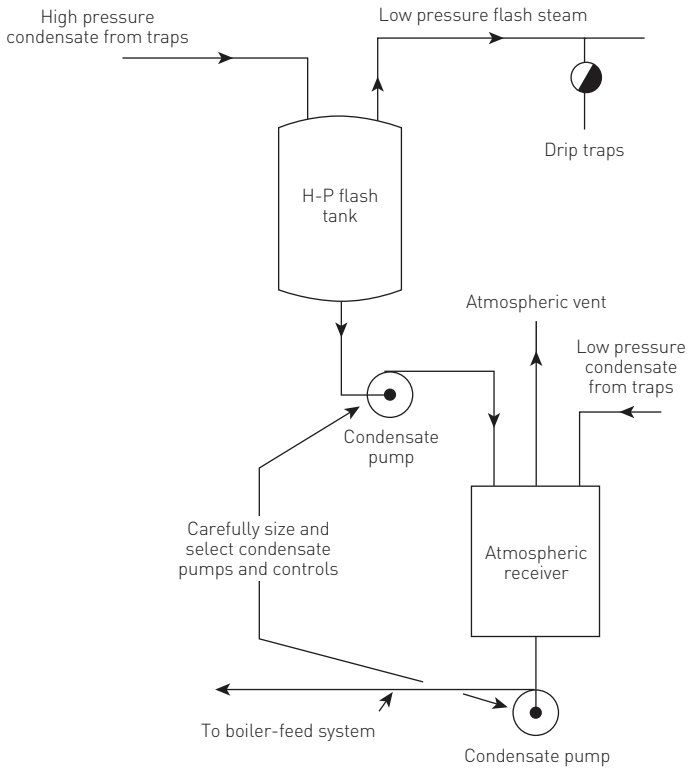

Condensate lifting
When the condensate discharged from a steam trap must be raised to a collecting manifold or header, it is necessary to assure that the discharge pressure at the trap is sufficient to overcome the vertical lift plus the pressure in the overhead return line. If this is not the case, reverse flow will take place. Every foot of elevation following a trap will add ½ psi to the back pressure the trap experiences. It is important to assure in these applications that total back pressure does not exceed the allowable limits of the particular type of trap selected. Figure 5.4 shows an example of the arithmetic used in estimating back pressure when a trap is discharging to an overhead return line. Note that pipe, valves and fitting pressure losses will also contribute to the back pressure.
In the example shown, a check valve is installed at the bottom of the riser. This is to prevent backflow into the heating coils and encouraging corrosion when the system is shut down. Check valves tend to leak over time and hence, in this example, would be effective only during relatively brief periods.

Pumping traps
The installation shown in Figure 5.4 is representative of many situations in which condensate is raised to an overhead return main by pressure in the discharge line. There are occasions when this type of drainage arrangement is not considered especially satisfactory. An alternative approach employs a device called a 'pumping' trap. This has the advantage of allowing a number of traps to drain condensate by gravity to a sump before being raised to the return main. Water hammer potential is reduced and quicker plant startups are possible when pumping traps are used. Pumping traps also can lift condensate from a condenser or turbine drain that may be operating at vacuum conditions. The principle of a pumping trap is that of a closed receiver fed and drained through check valves. It contains a float that rises until it opens a valve admitting steam that pressurizes the receiver. This, in turn, forces the accumulated condensate out of the receiver to an elevated return system. The falling float closes the valve admitting steam and opens an atmospheric vent. Condensate can now flow again by gravity into the unpressurized receiver until the float again rises sufficiently to repeat the pressurizing cycle.

Auxiliary air vents
Air in a heating system significantly reduces its efficiency. Air is a very poor conductor of heat and air filming on pipes and heat exchanger tubes reduces the heat transfer rate through their metal walls. Also, steam mixed with air contains fewer BTUs at a given pressure than steam alone. It is the function of a steam trap to aid in venting air from a steam system, but auxiliary thermostatic air vents are often required. Open to cooler air and closed to hotter steam, they greatly speed up the air purging process. When frequent startups and shutdowns are the rule, rapid air purging is a significant factor. Thermostatic traps are often favored for their good air handling characteristics on startup. Figure 5.5 shows schematically a typical autoclave installation with auxiliary air venting.

FIGURE 5.4
Estimating back pressure when discharging to an overhead return

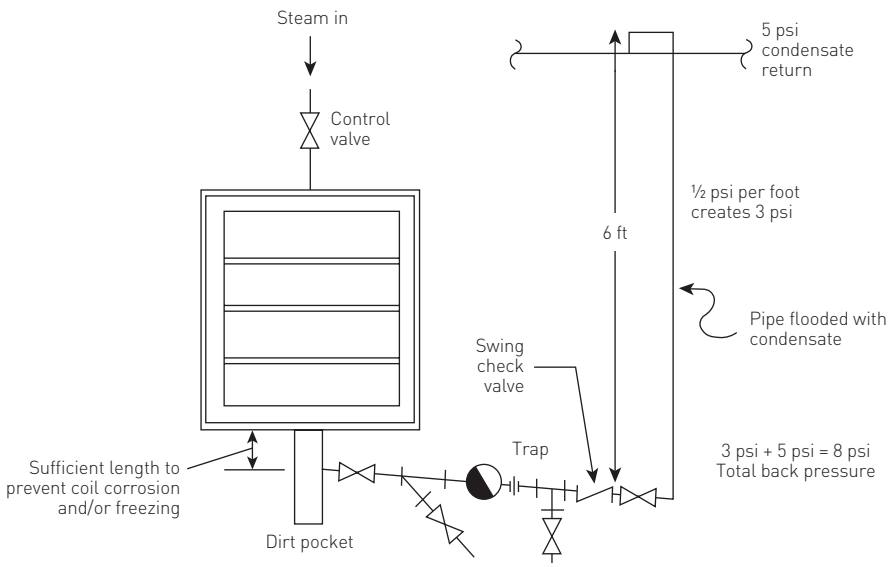

Vacuum breakers

When a closed and pressurized steam system is allowed to cool down, it is not just the temperature that drops. The pressure in the system will decay to a vacuum unless some mechanism permits the entrance of air, thus allowing the system to achieve atmospheric pressure. Such a mechanism is called a vacuum breaker. It is essentially a check valve, closed to internal pressure, but open when that internal pressure becomes less than atmospheric. Figure 5.6 shows schematically the installation of a vacuum breaker on an air heating coil.

If the upper shut-off valve is closed while the heating unit is in operation, condensate will not be able to drain out of the unit.

As it cools, it is possible for condensate that has drained, into the return system earlier, to be drawn back into the unit unless a vacuum breaker functions to permit air to enter the system.

YARWAY MODEL 71I

FIGURE 5.5
Auxiliary air vents are often helpful in purging air from large steam spaces at startup

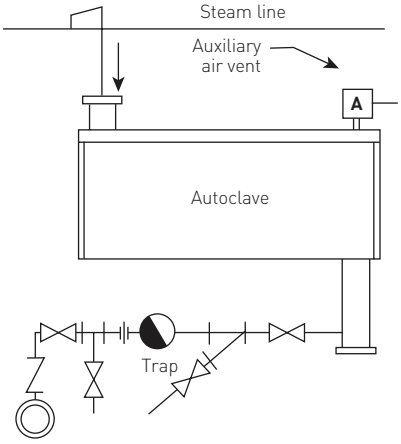

FIGURE 5.6
A vacuum breaker aids in the drainage of condensate when a steam system is shut down

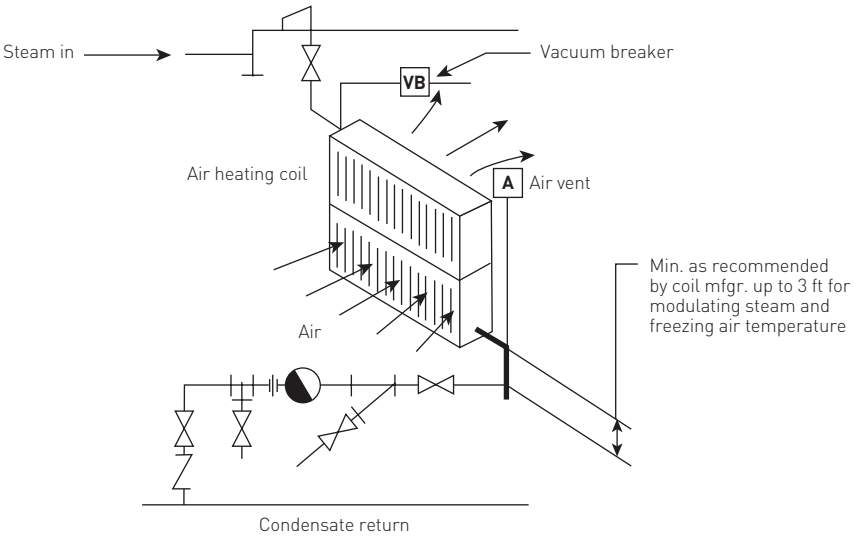

SUMMARY

Performance problems with steam traps are often directly traceable to the piping arrangements used to install them. Experience continues to justify the wisdom of knowing and following good piping practice.

Ideally, condensate should be able to drain freely to (and from) a steam trap by gravity. Line restrictions which may produce elevated back pressures or lead to condensate flashing, should be avoided. Such restrictions may result from the use of undersized valving or excessive pipeline size reductions. When condensate must be raised to reach a trap or an elevated return main, care should be exercised so that steam binding or excessive back pressures do not occur.

Steam traps should be installed so that performance checks and maintenance activities can be easily performed. Properly sized strainers with a suitable blowdown valve are an easily justified steam trap protection device. Air vents, vacuum breakers and check valves may be required to solve specific drainage or flow problems which otherwise would adversely affect a steam trap's performance.

The removal of condensate from a steam system cannot be considered as an afterthought. The absence of problems associated with water hammer, corrosion, dirt and freeze-ups has been the result of careful planning and conscious effort to avoid the root causes of these problems.

CHAPTER 6 – INTRODUCTION

Steam traps must be selected, sized and installed carefully if good system efficiencies are to be achieved. By themselves, however, these factors will not assure an efficient system. In the long run, regular maintenance of the selected traps will be the significant factor in system efficiency because in time all steam traps fail. In spite of the certainty of failure and the high cost consequences that can result, really good trap maintenance programs seem to be the exception rather than the rule. This may be because traps are relatively inexpensive devices and it may be wrongly considered that they perform a relatively inconsequential task. The equipment that traps protect is often large and expensive. Its damage or reduced productivity can be very costly. When a steam trap fails in the closed position, condensate will back up into a heat exchanger. This can spoil the product at the worst or simply reduce heat exchanger utility at the best. A trap that has failed closed in other circumstances, such as in a freezing environment, can readily lead to lines blocked or broken by ice.
Alternatively, when a steam trap fails in its open position, it usually damages nothing. It simply allows steam to flow through a system at much higher rates than is necessary for the heating job to be performed.
It reduces system efficiency in the same manner as any other steam leak. While it is generally considered more desirable for a trap to fail in the open rather than the closed position, either can have significant adverse cost consequences.
The very high cost of generating steam, and then failing to use it properly, is beginning to gain the attention of plant managers. Also, recognition is developing that a good steam trap maintenance program is not a questionable expense but a source of significant cost savings both in fuel costs and in higher equipment utilization. Any plant seriously interested in reducing its energy costs must develop a systematic approach to maintaining its steam traps in proper operating condition:

Maintenance programs

Maintenance programs will necessarily differ among plants having five, five hundred or fifteen thousand steam traps. Nevertheless, their objective will be fundamentally the same. In larger plants having one thousand or more traps, individuals with the full-time assignment of checking and reporting the performance of steam traps are increasingly common. Smaller plants may not have a full-time specialist, but some are attempting to have an individual who is especially knowledgeable about steam traps and steam-trapping practice.
Regardless of the size of the plant; a common problem exists for every steam trap user: the difficulty of determining if a trap is working properly. While sometimes it is a relatively easy matter, frequently it is difficult, speculative and uncertain. Specialized equipment exists to help the steam trap checker and a great deal has been written listing logical progressions of questions and tests to establish if a trap is performing properly for its given conditions. However, conclusive answers to some of these questions are frequently not easy to supply.
To date a good bit of experience, judgment and art are still necessary to identify malfunctioning traps – especially if they are discharging into a closed return system.

The essentials of a successful maintenance program

Successful maintenance programs of the larger users of steam traps tend to have certain common elements. A review of these elements can be useful to maintenance managers in the plants having small as well as large trap populations. They are:

- A committed member of Plant Management who understands the high financial payback associated with an efficient and well-maintained steam trapping system.
- A valid cost analysis developed over a meaningful period of time which has shown the dollar savings in energy costs associated with a specialized pilot maintenance program for steam traps. Often initiated in a single portion of the plant, these pilot programs, allow product produced to be correlated with steam consumed both before and after the start of a specialized steam trap maintenance activity.
- A full time steam traps maintenance crew, including a diagnostic specialist, in addition to the personnel who repair or replace defective traps.
- A set of steam trapping standards which recommend a correct piping configuration and trap type for the various trap applications in the plant. Efforts generally have been made to standardize on as few trap types as practical.
- A complete, but easily kept, set of maintenance records including simple maps identifying the location of every trap in each area of the plant. Survey sheets are employed that list (1) an identifying number for every trap location in a given area; (2) the equipment being drained; (3) the operating pressure; (4) the trap type suitable for the application; (5) and a place to record trap condition at the time of a survey.
- Numbering and tagging every trap location is essential for a successful maintenance program. The written records of the condition of each trap at the time of inspection are also essential so that inspection frequencies can be logically established. These records also provide opportunities for a wide range of performance analyses and comparisons between trap types should there be evidence that additional cost savings can be obtained by seeking absolutely optimum performance.

The importance of trapping standards
When experience has shown that the requirements of a certain application are well satisfied by a specific type of trap and piping configuration, it makes sense to establish a trapping standard that will apply to all similar applications. When this standardizing process is expanded to cover all trap applications in a plant, it produces important benefits. The steam trap maintenance activity is greatly simplified. The variety of traps in use is reduced and their proper performance becomes better understood by maintenance personnel. Traps that have reached the end of their normal service life are repaired. Misapplied traps are more easily recognized and are replaced, rather than mistakenly reinstalled. Repeatedly, the experience of steam trap users who make the effort to standardize their steam trapping practices is an improvement in system reliability and efficiency.

Establishing trapping standards
A plant that has become convinced it can benefit from the establishment of steam trapping standards may be tempted to simply adopt standards which have been successfully used elsewhere. This is probably unwise. A chemical plant, a refinery, a papermill or a food processing plant reasonably can be expected to have different trapping standards. The manner in which these plants operate will be different and their exposure to freezing weather can vary – both factors will strongly influence the standards that should be adopted. While good piping and installation practices are the same, regardless of industry or climate, the specific trapping requirements of individual plants should be recognized.

Getting started with trapping standards
The initiation and development of trapping standards for an organization may occur in a wide variety of ways, but ultimately someone has to wrestle with some basic questions. Typically:

1. How should steam trap applications be classified so that standardization can reasonably take place?
2. What are the most important criteria by which steam trap performance should be judged?

Classification of steam trap applications
Steam trap applications are classified in at least two major ways:

1. Type of equipment being drained. For example; steam mains, drying cylinders, heat exchangers, storage tanks, vulcanizing presses, tracing lines.
2. By generic conditions as defined by pressure and condensate load. These can be represented by a simple matrix such as Figure 6.1 or one that is more refined, Figure 4.2.

If the operating conditions – i.e., pressure and condensate loads – are quite uniform for each of the specific types of equipment in a plant, then classification by equipment being served may be quite suitable. Often this is not the case; as there may be steam mains at 100 psi and others at, say 500 psi, or small heat exchangers having condensate loads of 1000 psi while others approach 10,000 psi. Differences of these magnitudes almost inevitably lead to different standards recommendations. Generic classification of operating conditions by its very nature tends to be more widely applicable. Sometimes it is portrayed in a graphic manner as shown in Figure 6.2.

FIGURE 6.1
Matrix format that can be helpful in establishing plant-wide steam trap standards.
Each quadrant block should reference the preferred type of trap for the stated conditions.

	Load		
Diff. pres.	**Below 100 lb/hr**	**Between 100 and 1000 lb/hr**	**Between 1000 and 10,000 lb/hr**
Below 100 psi			
Between 100 and 300 psi			
Between 300 and 600 psi			

Trap evaluation criteria
A list of the criteria useful in evaluating the suitability of a steam trap for a particular application can be quite long. Chapter 4 'Principles of steam trap application' discusses these criteria at length and Figure 4.3 shows such a list. Selecting a steam trap type (thermostatic, thermodynamic or mechanical) as the standard for a particular application in a plant requires making decisions about the inherent advantages and disadvantages associated with each type. Chapter 3 'Operating principles of steam traps' describes these advantages and disadvantages. Obviously, the decision to standardize on a particular trap type for a certain application should be made with great care and after evaluation of all relevant factors because, by definition and intent, a standard will be used over and over again.

Steam trap checking
Regardless of the care that has been spent in classifying a plant's steam trap installations, and the thoroughness with which various types of traps have been evaluated and the care with which plant standards have been prepared, there will ultimately be the need to judge whether the installed traps are working properly or whether they require repair or replacement. This is not a job for the untrained and inexperienced.

Certain gross failures are of course readily detectable. A cold steam trap is obviously not working although it remains to be determined whether the trap has failed mechanically, or whether accumulated dirt and scale has choked flow through the trap, or whether it has been inadvertently valved out of service as a result of some unrelated maintenance activity.

Traps that are visibly leaking steam at joints or seals have clearly failed. Traps conspicuously blowing large amounts of vapor from their exposed discharge side probably have failed, but it is at this point that a level of uncertainty begins to develop. Most properly operating traps will have 'flash steam' associated with their discharge. In addition, the amount of vapor and the pattern of discharge (continuous or cyclic) of a properly operating trap are significantly influenced by normal operating variables such as pressure and condensate load. Uncertainty increases in a dramatic fashion with attempts to assess a trap's performance when it is discharging into a closed return system and it is not possible to see its discharge pattern.
Despite these areas of uncertainty, learning to identify grossly failed steam traps can proceed with a reasonable level of confidence. However, it is the ability to identify that a trap has started to fail and is beginning to pass more steam than is acceptable (but has yet to reveal itself as a grossly failed trap) that elevates steam trap checking to a task for a skilled and knowledgeable individual.

FIGURE 6.2
Example of a graphic format that can be helpful in establishing plant-wide steam-trap standards. Equipment having operating conditions defined by one of the reference areas should be able to utilize successfully a given trap type and installation layout.

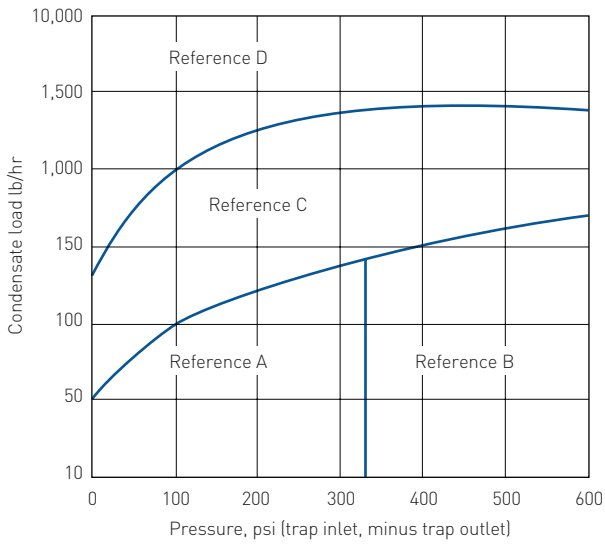

A basic rule (with no exceptions)
It is essential that anyone assigned the responsibility of checking steam traps understand the principles of operation of the various types of devices to be checked.
It is no more realistic to attempt to diagnose the performance of a steam trap without first knowing its principle of operation than it would be to diagnose the performance of an internal combustion engine without knowing the difference between a diesel, turbine, or gasoline engine.
Chapter 3 'Operating principles of steam traps' describes how each of the various trap technologies work. Thermostatic traps (bimetallic, filled bellows, diaphragm capsule and constant temperature-capsule) all have different performance characteristics. Thermodynamic traps (disc, piston, lever) have different performance characteristics between themselves and also from the thermostatic models. Mechanical traps (bucket and float) have performance characteristics that differ from each other and yet are similar to some of the other trap types.
In summary, it is essential to know the principles of operation of a trap before attempting to check its performance. It is also important to be aware of a complicating factor: the 'usual' performance characteristic associated with some trap types can be altered significantly under certain operating conditions. This phenomenon is generally associated with very high or low condensate loads (relative to the trap's capacity) or with very high or low pressure differentials across the trap (relative to its pressure rating).

Fundamentals concerning trap failures
- Most types of traps will fail open so that they leak steam. Some types of traps fail closed so that they pass neither condensate nor steam, and some types of traps will fail unpredictably in either an open or closed mode.
- All types of steam traps can appear to have failed because of some shortcoming or problem in the system in which they are installed. While this fact must always be kept in mind it does not become a significant issue unless the steam system has been neglected.
- The most common failure for all types of steam traps is erosion of the seat and valve sealing faces. This keeps the trap from closing tightly. Once a small leak starts in a pressurized steam system, it becomes a large and expensive leak in a short time. Seat and valve leakage generally results from pipeline dirt becoming caught between their mating surfaces. Small manufacturing imperfections relating to surface finishes or proper alignment can also shorten trap life.
- Pipeline dirt, oxides, scale and pipe joint sealants are the enemy of all types of steam traps. Some trap types are more forgiving than others, but all have their limits. A trap which has the appearance of having failed closed because of dirt can often be restored to useful service with a simple cleaning. A trap leaking steam because of dirt between the valve and seat probably should be replaced or repaired with new components. The likelihood of permanent damage having occurred because of the dirt is high.
- The life expectancy of a trap is largely related to the pressure at which it must operate. In general – the higher the pressure, the shorter the life.

Fundamentals concerning trap checking techniques
Checking a steam trap is the process of observing its performance and comparing it with the performance characteristics that one has learned are typical for a healthy trap of the same type. If the performances are similar, the trap may be judged to be O.K. If there are differences, it can be concluded that either the trap is faulty or the system in which the trap is installed has a problem.
There are three basic techniques used in observing the performance characteristics of a steam trap. They are:
- **Sight:** visually observe the discharge pattern.
- **Sound:** listen to the functioning of the valve mechanism and the flow of fluid through the seat.
- **Temperature:** determine the trap's temperature.

Each of the checking techniques has its limitations and seldom can a conclusive opinion be reached on the basis of a single type of observation. Experienced steam trap checkers invariably try to use all three techniques. Some will use more expensive checking equipment than others in this checking process, but the quality of their results does not seem to vary much.

Sight
Watching the discharge pattern of a steam trap is probably the most reliable method of determining whether it is working properly. Unfortunately, many traps discharge into closed condensate return systems without test 'T's and the discharge pattern is not visible. Under these conditions trap performance appraisal is limited to sound and temperature monitoring.
The fundamental limitation to observing the discharge pattern of a steam trap in order to assess its health is that hot condensate discharging to atmosphere flashes into steam. The observer then has to decide whether the clouds of vapor being witnessed are the result of leaking steam or the normally expected flash steam. An experienced eye begins to distinguish the lazier action and white appearance of flash steam from the more transparent jet-like discharge of live steam that can be seen right at the trap's outlet. The best clues come with watching a steam trap that has a normal crisp off/on cycle, such as a disc or bucket trap. If the discharge vapor has any velocity during the closed period of the trap's cycle, it can be reasonably assumed that it is leaking steam and should be replaced.
While most thermostatic traps can have a cyclic mode discharge, it tends to be slower and less definite than either the disc or bucket types. Thermostatic traps, especially bimetallic traps, can also have a continuous discharge pattern. Float traps that are designed for continuous modulating drainage are harder to diagnose, especially in the early stages of failure.
Steam trap manufacturers recommend, and many users routinely install, a test 'tee' and valving arrangement that will permit witnessing a trap's discharge pattern in an otherwise closed condensate return system. The initial extra cost of this type of installation is handsomely repaid by the surer knowledge it produces concerning steam trapping efficiency.

Sound
Listening to the sound of a steam trap functioning with the bit of a long handled screwdriver (held against the trap and its handle pressed against an ear) can provide important information as to whether it is doing its job properly.
Because of the high background noise that often surrounds a steam trap, the screwdriver or industrial stethoscope is giving way to the ultrasonic listening device with earphones. These help to screen out the normal ambient background noise and permit more precise identification of a noise pattern in an individual trap.
The weakness of these devices, which is not overcome with the more expensive models, is that to hear a noise pattern is not necessarily the same thing as understanding what it means. Listening to a trap which is designed to have an open and closed cycle action can quickly reveal if the trap is operating in this manner. It can also reveal if there is any significant leakage past the valve when it is in its closed position. But the value of listening to float traps or thermostatic traps operating in a modulating mode in an effort to determine if they are leaking steam is questionable. The noise patterns generated in the trap can be heard relatively easily. The problem is in the mind of the listener – "What do they mean?"

Temperature
Every individual who checks steam trap performance employs some sort of temperature sensing means. A wet finger (obviously dangerous), a squirt bottle, a surface-contacting pyrometer, or an infrared sensor all have the same initial objective: Is this trap hot? If not, it can be deduced that little or nothing is flowing through it and the trap is not performing one of its major functions – draining condensate. This does not necessarily mean that the trap has failed. It first must be determined if some obstruction either up or downstream of the trap has blocked flow in the pipe. Once that issue is resolved, it is logical to proceed with steps investigating the trap for blockage by pipeline dirt or failure of its internal mechanism.
When it has been determined that a steam trap is hot, the next question is whether it is as hot as it should be. Steam traps designed to discharge condensate very close to steam temperature such as disc, bucket or float traps will have a surface temperature about 5 to 10% below the temperature of steam in the system. Figure 6.3 shows typical pipeline surface temperatures.

FIGURE 6.3
Pipe surface temperature vs. steam pressures

Steam pressure (psig)	Steam temperature (°F)	Pipe surface temperature range (°F)
15	250	238 - 225
50	298	283 - 268
100	338	321 - 304
150	366	348 - 329
200	388	369 - 349
450	460	437 - 414

FIGURE 6.4
Live steam and flash steam

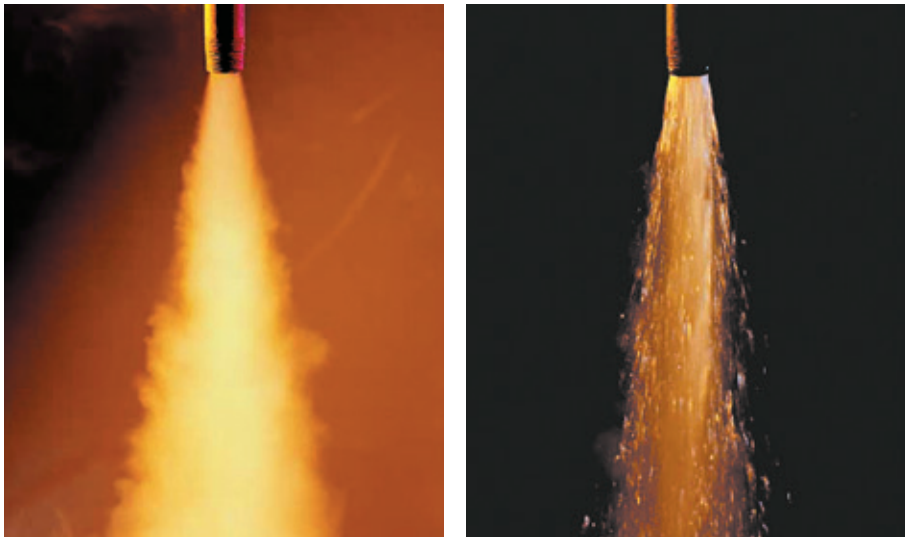

FIGURE 6.5
Steam trap checking decision tree

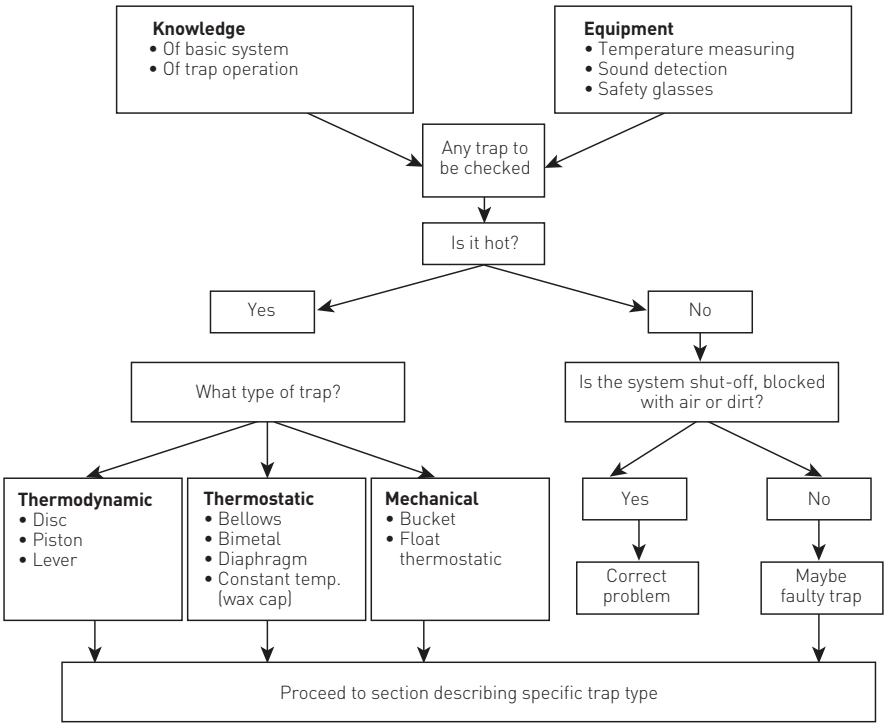

Unfortunately, it does not follow that if temperatures are observed in this range that the trap is healthy. It only means it is doing half its job properly, i.e., draining hot condensate. It is difficult to determine by temperature alone if a trap is leaking steam when it is designed to operate at close to steam temperatures. If measured temperatures are much below the expected range, the trap can be suspected of backing up more condensate than normal. Traps designed to discharge condensate at temperatures well below that of steam, such as some of the thermostatic types simply reverse the generalities described above. If they measure hotter than expected; they probably have failed and are leaking steam. If the temperatures are well below the steam temperatures in the system, these traps may be judged to be backing up condensates as they have been designed to do.

In general, there will be a significant difference in temperatures between that observed upstream of a trap and that observed downstream. These temperatures will be directly related to the pressure in the system at the point of measurement. If the temperatures measured up and downstream of a trap are the same, it can only be deduced that the pressure on either side of the trap is the same. As this is an abnormal condition, it can be concluded that a system problem exists that may or may not be caused by a faulty trap discharging into a common return. More analysis is necessary.

The trap checking decision tree

There is a logical progression of steps leading to the decision that determines whether an installed steam trap is healthy enough to continue in service or whether it should be repaired or replaced. Because of the multiplicity of variables and the increasingly wide variety of trap types, this decision tree can be enormous. Outlined below is a progression of basic questions which illustrates only the major branches of the tree. It is suitable as a troubleshooting starting point and entirely adequate for identifying the vast majority of failed traps.

In attempting to answer these basic questions, it is assumed that visual, temperature and listening techniques will all be used. It is also assumed that the individuals doing the checking will have certain basic background information about:

1. The system in which the trap is installed. Specifically,
   - The approximate pressure upstream and downstream of the trap.
   - That the overall system is stable neither starting up nor being shut down; the trap application and its general characteristics.
2. The basic operating principle of the trap and whether it can be expected to:
   - Discharge condensate within about 10° of steam temperature as most thermodynamic and mechanical traps do or at much larger suppression temperatures as is characteristic of some of the thermostatic traps.
   - Have a distinct off-on cycle typical of a thermodynamic (disc type) and mechanical (bucket) or have a modulating or continuous flow typical of a mechanical (float) and some thermostatic traps which tend to throttle flow.

Figure 6.5 outlines the first major branches of the steam trap checking decision tree. Successive branches associated with each trap type are presented on subsequent pages.

Checking thermodynamic traps (disc, piston and lever traps)
Disc traps – mechanical failure mode

- Disc traps fail in the open position. Seating surfaces wear and erode to the point they can no longer shut tightly.

Hot disc trap

Using listening device or by witnessing discharge, determine number of open/close cycles per minute.

1. Disc traps may cycle up to 50 times a minute without wasting steam. The higher the cycle rate, the closer the trap is to the end of its useful life. Cycles in excess of 1a second indicate a worn out trap unless it is experiencing an exceptionally high back pressure. It is advisable to consider repair or replacement of the trap when it cycles 20 to 30 cycles per minute. The trap should open and close crisply with no leakage in the closed mode.
2. If cycling cannot be detected with a listening device and discharge is not visible, close downstream block valve to condensate return system and open test tee. If trap:
   a. starts to cycle normally, it may be assumed that elevated back pressure in the condensate return system has caused trap to fail open; seek and correct cause of system problem.
   b. fails to cycle and blows steam and condensate continuously, it can be concluded internal parts have failed; repair or replace trap.

Cold disc trap

If it has been established that the system is not the cause of the trap being cold:

1. Open strainer blow-down valve in front of trap to purge it of dirt or air. If trap fails to start normal function, then
2. Close block valves and disassemble trap to clean passages. If inspection reveals damaged intervals, repair or replace the trap.

YARWAY MODEL 741

YARWAY MODEL PB40

Checking thermodynamic traps (disc, piston and lever traps)
Piston and lever trap – mechanical failure mode

- Piston and lever traps fail in the open position. Seating surfaces wear and erode so that trap can no longer close tightly.

Hot piston or lever trap

Follow same procedure described for checking disc traps. Note that these traps are designed with a control flow orifice. This small orifice will constantly discharge condensate between normal full open cycles of the main valve. If control flow discharge appears excessive, inspect trap valve seat for wear.

Cold piston or lever trap

Follow same procedure described for checking disc traps. Note that these traps have good air handling characteristics and are not susceptible to air binding.

Checking thermostatic traps (bellows, bimetallic, diaphragm and wax capsule)
Bellows trap – mechanical failure modes

- Many bellows traps fail closed due to a ruptured bellows that allows the valve to be pressed closed against the seat. Some trap manufacturers provide a bellows that allows the valve to move to an open position if the bellows ruptures.
- Bellows traps can also fail open due to wear and erosion of the valve and seat or extreme bellows distortion that prevents valve from contacting seat.

Hot bellows trap

Confirm that seat and valve are momentarily capable of being shut, and that bellows is 'alive' by:

1. Partially opening strainer blow-down valve in front of trap to drain condensate from line and expose trap to dry steam.
2. Witness shut-off of trap discharge by means of downstream test tee.
3. Failure to see tight shut-off confirms trap needs repair or replacement.

Using a listening device or temperature sensor can assist in confirming that bellows is 'alive' and cycling if test tee is not available to witness trap's response to dry steam.
If cycling is not evident, it may be induced momentarily by shutting off upstream block valve for a minute or two to artificially backup condensate. Releasing condensate will cause trap to open briefly, before closing again, thus demonstrating that bellows is 'alive'.
Listening devices can occasionally detect steam leakage if seat and valve are sufficiently worn to prevent tight shut-off. If tight shut-off is still doubtful, close block valves, disassemble trap and inspect bellows and seat for erosion.

Cold bellows trap

If it has been established that the system is pressurized and is not the cause of trap being cold:

1. Close block valves and disassemble trap to inspect it for failed bellows or need to clean flow passages of dirt.
2. Repair or replace trap if bellows is ruptured or spongy.

Checking thermostatic traps (bellows, bimetallic, diaphragm and wax capsule)
Bimetallic trap – mechanical failure modes

- Most bimetal traps fail in the open position because bimetal elements tend to fatigue in a steam environment and lose their ability to close valve tightly.
- Erosion of seat and valve results from trap's failure to close tightly due either to dirt or weakened bimetals.

Hot bimetal trap

Follow same procedure described for checking performance of hot bellows trap.

Cold bimetal trap

If it has been established that system is pressurized and is not the cause of trap being cold:

1. Close block valves and disassemble trap to inspect it for dirt or other obstruction. Repair or replace trap if internals appear damaged.

Diaphragm capsule trap – mechanical failure modes

- Diaphragm capsule traps are relatively new, with less field experience than that associated with bellows or bimetallic types. They are designed to fail in an open condition should diaphragm crack and its liquid fill be lost.

Hot diaphragm trap

Follow same procedure described for checking performance of hot bellows traps.
Cycling of diaphragm trap is slower and less distinctive than is typical of bellows trap.
Several minutes may be required for a closed trap to open to discharge condensate.
If tight shut-off is impossible, trap should be repaired or replaced.

Cold diaphragm trap

If it has been established that system is pressurized and is not the cause of trap being cold:

1. Close block valves and disassemble trap to clean dirt from flow passages (small passages and condensate flows make this trap more susceptible to dirt accumulation than other trap types).

Constant temperature wax capsule trap – mechanical failure modes

The use of a temperature sensitive wax-filled capsule to open and close a trap is a relatively new technique. These traps discharge condensate at a single predetermined temperature which may be adjusted. They are designed to fail in the open position should the capsule lose its fill.

Hot constant temperature trap

Follow the procedure described for checking performance of bellows traps.
Objective is to establish that trap can shut-off tightly. Once closed, it may require several minutes to open. If trap is unable to shut-off tightly, repair or replace it.

Cold constant temperature trap

If it has been established that the system is pressurized and is not the cause of trap being cold:

1. Close block valves and disassemble trap to inspect it for dirt or other obstruction.

Checking mechanical traps (bucket, float and thermostatic)
Bucket trap – mechanical failure modes

- Bucket traps tend to fail in the open position. The 'prime', necessary to float the bucket and close the valve, can be evaporated so that the trap cannot shut off. The valve and seat also wear and become eroded over time so that they can no longer shut off tightly. Bucket traps can also fail in the closed position. If the bucket vent hole becomes clogged, air can keep the trap closed. Higher than expected steam pressures also may prevent the bucket from opening the trap.

Hot bucket trap

Using a listening device or by witnessing discharge pattern, determine if trap is cycling, thus confirming free movement of bucket.

1. If cycling is visible, verify valve and seat condition by observing tight shut-off when trap is in closed portion of its cycle.
2. If cycling is not visible, close upstream block valve for several minutes. This will allow condensate to accumulate in front of the trap. Opening the block valve will enable condensate to reprime trap or induce temporary cycling if line conditions are causing trap to operate in its less typical modulating mode.
3. Trap should be repaired or replaced if cycling cannot be induced or if tight shut-off is not visible.

Cold bucket trap

If it has been established that the system is pressurized and is not the cause of the trap being cold:

1. Verify that line pressure does not exceed trap's rated pressure. Such a condition will cause trap to remain in the closed position.

If over-pressurization is not the problem, close block valves and disassemble trap so that internal parts can be inspected. Dirt and oxides may need to be cleaned from bucket air vent hole. When air cannot be removed, bucket will float, holding valve closed.

Checking mechanical traps (bucket, float and thermostatic)
Float and thermostatic trap – mechanical failure modes

- Float and thermostatic traps can fail in either a closed or an open position. They fail closed if the float is ruptured by water hammer and can no longer rise to open the valve. They also fail closed if the thermostatic element fails and air cannot be vented from trap.

They fail open when the main valve and seat or thermostatic air vent valve and seat are worn or eroded so that they leak steam.

Hot float and thermostatic trap

Because trap is designed to drain condensate continuously, verification that valve and seat of trap and air vent are not leaking steam is very difficult unless leakage is very large.

1. Examine trap discharge pattern for evidence of excessive vapor – i.e., steam leakage.
2. If possible, drain condensate through strainer blowdown vent in front of trap to determine if both trap and air vent valve can close tightly in the presence of dry steam. Tight shut-off establishes that trap's condition is good. Failure to shut-off tightly indicates that trap needs repair or replacement.

Cold float and thermostatic trap

If it has been established that the system is pressurized and is not the cause of trap being cold:

1. Verify that system pressure does not exceed rated pressure of trap. This can prevent float from opening valve.
2. Close block valves and disassemble trap to examine internal parts for damage especially thermostatic air vent. Also inspect for flow obstructions.

SUMMARY

The subject of steam trap maintenance is best summarized by three key points:

1. Careful selection and sizing of a suitable steam trap type is important, but regular maintenance is essential to the efficient and reliable steam system.
2. Taking the time to establish steam trapping standards for a plant repays its initial costs year after year because it simplifies steam trap checking and the maintenance program.
3. Regardless of plant size, steam trap maintenance should be recognized as a specialized activity requiring specialized knowledge and experience on the part of those expected to do the job. The costs of doing this job well are trivial when compared to the costs of doing it poorly.

CHAPTER 7 – INTRODUCTION

Today, an estimated 75% of installed steam traps discharge into closed condensate return systems, compared to less than 50% a few years ago. Energy saving reasons for this increased usage are covered in the brief description of such systems in Chapter 5; the discussion there also emphasizes that these systems have the potential for creating trapping problems.
In general, traps discharging into condensate return lines have much higher failure rates than those discharging to atmosphere. Design of return piping can contribute to such failures and hence warrants serious attention.

Designing return piping
Proper design of return lines is a complicated task. Correct pipe length and diameter are difficult to predict, so a method is given here to provide a first estimate. (It also can be used to estimate the impact of various line sizes on system pressures).
The Yarway method of estimating return line size differs from other published methods in a number of ways. These differences and the assumptions involved are as follows:

1. The condensate is assumed to be a homogeneous mixture of liquid and vapor as it is discharged from the steam trap, and while it is traveling through the return piping.
2. The mixture is assumed to be at constant temperature; therefore, there is no condensation of vapor or cooling of liquid. This results in an estimate of larger pipe size.
3. At the lower initial steam pressures, velocities of the liquid/vapor mixture are limited to lower values; in general, this produces lower velocities with larger proportions of liquid. Some methods assume a constant return line velocity for the mixture in the range of 3,000 fpm to 7,000 fpm. Such velocities are relatively high and can produce erosion of the pipe, especially where there's a very small percentage of flash and a large proportion of liquid.
4. The velocity profile for a typical turbulent situation is used. This further limits velocities and pressure drops.
5. The installed steam trap capacity, not condensate load, is considered an important factor.
6. A guide for fractional loads from manifolded traps is provided.

When condensate return line sizing is inadequate, it is due to one or more of the following reasons:

- The lines are receiving discharge from a greater number of sources than originally planned. This may be due to plant expansions or energy conservation programs.
- Lines carrying steam at varying pressures are discharging into a common return line.
- The steam traps are oversized and/or misapplied.
- The return line design, initially, was under-sized or marginal, or the piping installation was inadequate.

Whatever the conditions leading to the inadequacy of return lines, the results are overpressurization of the return system, venting of excessive amounts of vapor to the atmosphere, vapor binding of condensate pumps, noise, and unsatisfactory steam trap operation. All of these shorten trap life, impede drainage, promote freeze-ups, and increase maintenance time as well as cost.

Guidelines for system components
Yarway has developed guidelines for the design or use of the various components of a condensate return system. They are summarized in the following paragraphs and more broadly applicable considerations are given in the next section.
Steam main: the main, which carries steam from the boiler to headers or other distribution lines, should be of sufficient size to handle flow in the existing plant plus any additional flows required by plant extensions or additions. In this way, the heat user will have steam at the expected (design) pressure and temperature. The main should be well drained of condensate and vented free of air and noncondensibles.

Steam header or distribution line: carrying steam from the main to the heat user, this line should be sized adequately for the flow rate required so that it does not impose a severe pressure drop. It may have a control valve and should then be connected to the top of the steam main; the installation should include 'drip' traps to protect the control valve and assure moisture-free steam to the heat user. The important point to remember for the steam header or the main is to be sure they provide steam at the conditions anticipated.
Heat user: tracing lines, unit heaters, heat exchangers, and process equipment are typical examples of heat users. Each should have an adequate 'pocket' or hot well to collect condensate. When provision is made for condensate collection, consideration should be given to guidelines for other process equipment - such as those for pumps that drain a vessel for entrance loss and separation of steam bubbles from liquid condensate.
Fittings: to handle condensate that forms at saturation temperature, fittings from the heat user to the steam trap should be full bore. Requirements are similar to those for the prevention of 'pre-flash' at control valves. Maximum possible pressure at the steam trap inlet should be assured. Trap size should be reduced only at the trap outlet.

Steam trap: traps should be selected for specific applications. Design of the application should be taken into account, as well as the operating pressure and temperature ranges especially if the heat user has a control valve on the steam supply. Variations in condensate load should also be considered.
The steam trap should not be selected on the basis of pipe size and should not be oversized. On process equipment, a trap may be judged oversized if it has a safety load factor (SLF) of 10:1 or more.
To provide gravity drainage to the trap, it should be installed below the equipment. It should also be installed for ease of checking and maintenance.
Trap discharge line: oversized piping rarely creates problems; the line should never be undersized. It should be adequate to handle flashing condensate. All traps discharging near saturation temperature, or where condensate temperature is above saturation temperature for the return line pressure, will form flash vapor. The trap manufacturer's recommendation should be followed and the line sized for the instantaneous discharge rate of the trap.
If used, check valves should be suitable for the operating conditions; this requirement should be verified with the check valve manufacturer.

If present, lift of the discharge line to the return line should be accounted for (a lift of 2 feet adds approximately 1 psi to the pressure at the steam trap outlet). The discharge line should enter the return line on the top and not be directly opposite any other discharge line (see Figure 7.2 c and 7.2 d).

General design considerations
In the design of condensate return systems, there are some general considerations which can affect sizing of more than one component. Also, some of these pertain to problems that can come from undersized and overloaded systems.
Steam traps: the instantaneous discharge rate of the trap can contribute to overloading of the return line. If the trap is of the 'fail open' type, the amount of steam it can put into the line must be allowed for.
Because traps differ in operating principles, some may tend to get 'hot' when discharging into high pressure. This can cause accelerated wear of such traps as well as overloading or over-pressuring of the return line. Risk of steam loss also increases. Further, some types of traps tend to back up condensate if return pressures are elevated.

FIGURE 7.1

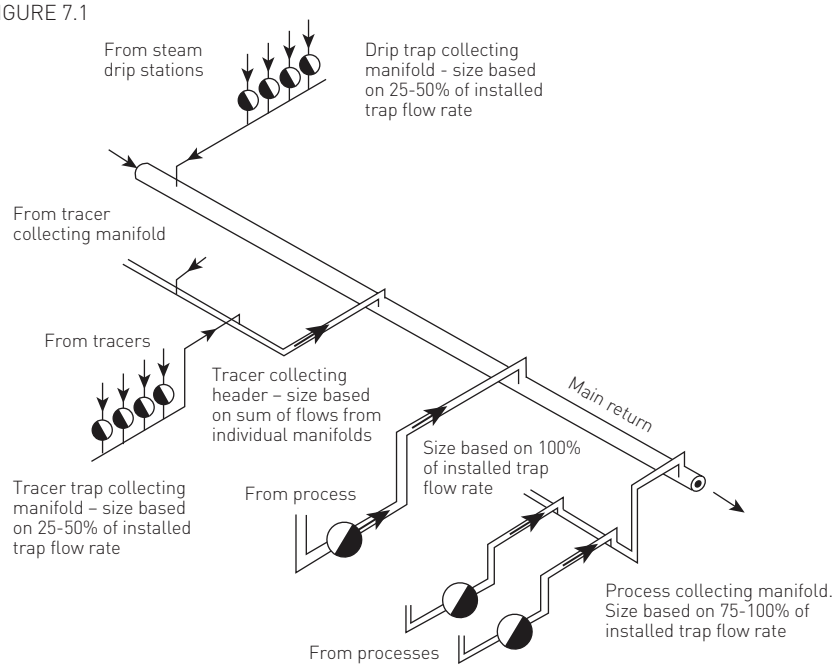

Condensate load: when the steam trap is sized, the smallest possible SLF should be used. Variations in ambient conditions must be checked out as to having a significant influence on condensate load, steam pressures, or condensate lines. Winter, for example, tends to result in lower steam pressures and higher return pressures. Sizing of the system may also be significantly affected by startup loads.
Piping: because it is very likely that the piping will have to serve some future plant expansion, it is best to provide for such growth in the initial design.
Allowances should be made for possible damage to piping. One cause is high velocity liquid that can result in erosion. Also, there can be excessive noise and/or cavitation damage. Corrosion is a frequent problem and is specifically important if erosion is also present. Deposition of 'dirt' reduces pipe bore and thus is a problem.
Collection headers: a separate return line may be advisable for each steam header pressure. This prevents discharge of a high pressure system from interfering with drainage and proper operation of a lower pressure system.
Collection vessel (or receiver tank): a vessel of sufficient size (volume) should be used, with the quantity of flash vapor taken into account. Its location should permit gravity flow from the return line into it.
If pumps are used to drain the liquid from the tank, there must be adequate NPSH (net positive suction head) on the pumps for the liquid temperature involved. Pumped liquid should be figured to be at saturation temperature for the pressure in the vessel. Vents and reliefs should be added, as needed and required by appropriate codes and standards. Also, transient loads should be allowed for; these include start ups, bypasses, and failed traps that may blow into the system. Overloaded receivers result in venting of excessive flash vapor and loss of energy. If the return is to a condenser, excessive cooling water is used.
If the collecting vessel is over-pressurized, liquid temperature can be too high for the selected condensate pump. This can result in vapor binding of the pump and damage to the pump itself.

Insulation: insulation of the return system helps conserve energy, but it maintains high flashing fluid temperatures that can make fluid handling difficult. Fluid handling problems, however, are overcome by proper regard for the nature of hot condensate and proper selection of components.
Safety: settings and size of relief valves and vents should be reviewed, especially if these must relieve a flashing liquid. As mentioned previously, transient situations – such as start up loads, open bypasses and blowing traps – should be allowed for.

Return line installation

1. For gravity flow, the line should slope toward the receiver (see Figure 7.7 a). Preferably, the slope should be constant; risers and pockets that produce shock and water hammer should be avoided.
2. With eccentric reducers, to accommodate larger pipe for larger loads, expansion should be on the bottom of the pipe (see Figure 7.7 b).
3. Discharge lines should be into the top of return lines so that they discharge into the vapor space and thus reduce noise (see Figure 7.7 c).
4. Discharge lines should be staggered to minimize noise, high local back pressure, and potentials for erosion (see Figure 7.7 d).
5. If heat using equipment must be gravity drained, the trap discharge line and the return line must be below the drainage point of the heat user. The return line should be at least two or three feet below the heat user outlet. Care should be taken with regard to possible freezing situations.
6. Alignment and support should be adequate for the main return line. Anchors are normally required. The code for power piping, ANSI B31.1, should be referred to. Consideration must be given to the weight of pipe itself, fittings, flanges, valves, insulation, and the fluid itself. The fluid should be assumed as being all liquid because hydrostatic testing is probably needed.

FIGURE 7.2

a. Slope toward receiver

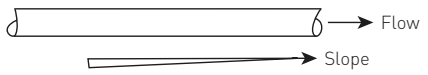

b. Expand on bottom

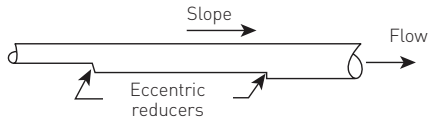

c. Discharge in top

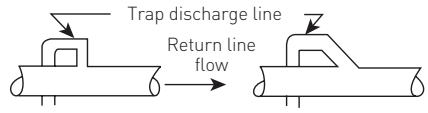

d. Discharge not opposite

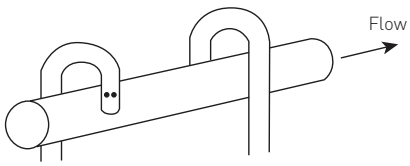

Other potential factors – such as wind, snow, ice, shock, seismic effects, vibration, and thermal stresses – need to be included in the considerations.

Estimating return line size and maximum load
Figure 7.3 is a nomograph that can be used for estimating the return line I.D. and also maximum load (condensate rate) that a given return line can handle. There are three basic elements involved in such estimates; these are defined by the equation:
W = (Factor X) (Factor Y)
When:
W = maximum discharge rate (catalog ratings in lb/hr) of all steam traps discharging into the return line, multiplied by a percentage that depends upon the trap application (25 to 50% for drips and tracings and 75 to 100% for process)
Alternately, for a given return line,
W = maximum carrying capacity in lb/hr of flashing condensate for all steam traps in the system
X = flash factor for various steam trap inlet pressures, P_1, and flash tank pressures, P_2, in psig (see Figure 7.3)
Y = pipe factor for various return line I.D.'s in inches and equivalent pipe lengths, Le, in feet (see Figure 7.3)

Included in factor X are considerations for a limiting pressure drop, percent of vapor formed, and the average density of the two-phase mixture (the latter is assumed homogeneous). Included in factor Y is a pipe friction factor for complete turbulent flow; this factor is based upon Figure 20 in the hydraulic institute pipe friction manual for steel pipe.

Sizing flash and receiver tanks
There are certain characteristics of a condensate return system that can affect how flash and receiver tanks are applied. These will be considered before the matter of tank sizing is covered.
Condensate and flash vapor should be piped into the top of the receiver. If the liquid condensate is returned, but no attempt is made to use the flash vapor, the receiver can be vented from the top to atmosphere.
An unvented receiver is satisfactory as long as the heat in the flash vapor can be absorbed in the receiver while the condensate is being pumped back to the boiler feed tank. If the flash enters the closed receiver faster than it can be absorbed, however, pressure in the receiver and return lines can interfere with performance of the system steam traps. Appropriate safety and relief valves are necessary.

In a flash condensate recovery system, a helpful and sometimes indispensable adjunct to the receiver is a flash tank that operates at some pressure above atmospheric. The flash condensate and its liquid are directed into the flash tank either through a top inlet or centrifugally through a side inlet near the top. Figure 7.5 illustrates these connections as well as steam and water outlets.

FIGURE 7.5
Condensate and flash steam recovery system

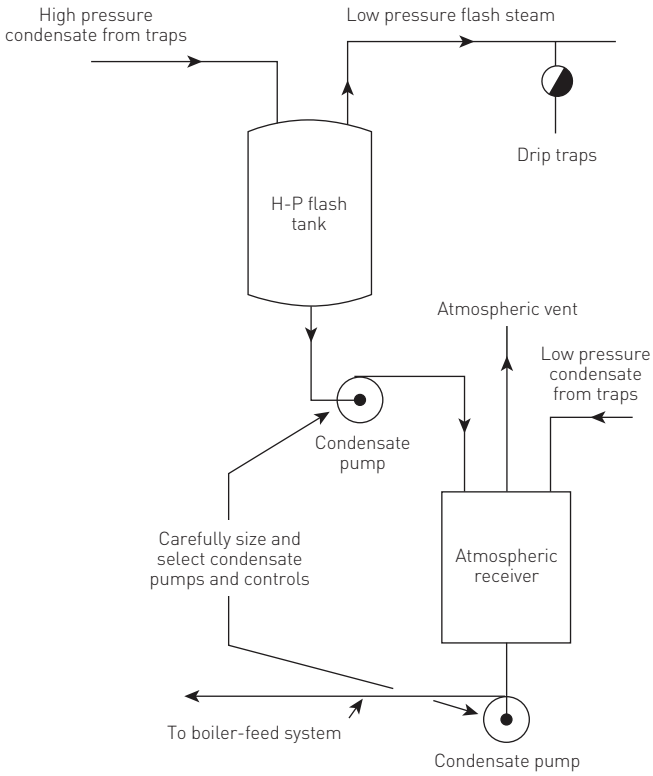

TABLE 1
Maximum ratings, centrifugal and top-inlet tanks, 1,000 lb/hr of flash steam

FLASH TANK PRESSURE psig

Tank no.	1	2	5	10	20	30	40	50	75	100	150	200
Centrifugal flash tanks												
2	1.5	1.6	1.8	2.3	3.0	3.9	4.8	5.5	7.5	9.5	13.0	17.0
3	3.2	3.4	3.9	4.9	6.4	8.5	10.0	12.0	16.3	20.0	27.7	35.0
4	6.0	6.1	7.1	8.8	12.0	15.0	18.0	21.0	27.0	34.0	50.0	66.0
5	16.0	17.0	20.0	24.0	32.0	41.0	49.0	58.0	79.0	100.0	142.0	184.0
6	27.0	29.0	34.0	42.0	58.0	73.0	89.0	105.0	142.0	180.0	254.0	329.0
Top-inlet flash tanks												
2	1.1	1.1	1.3	1.7	2.2	2.8	3.4	4.0	5.5	6.9	10.0	13.0
3	2.2	2.5	2.9	3.5	4.9	6.1	7.4	8.7	11.8	14.8	21.4	25.4
4	4.3	4.6	5.2	6.5	8.7	10.8	12.0	15.0	20.0	25.0	36.0	46.0

DIMENSIONS OF COMMERCIAL FLASH TANKS

Tank no.	Outside dia., in	Tank height, in	Overall height, in	Inlet-pipe size, in	Outlet-pipe Steam	Outlet-pipe Water
Centrifugal flash tanks						
2	24	56	65	2	3	1½
3	36	62	72	3	4	2
4	48	67	77	4	6	4
5	60	78	88	6	8	5
6	72	89	99	8	10	6
Top-inlet flash tanks						
2	24	56	65½	3	3	1½
3	36	62	71½	4	4	2
4	48	67	76½	6	6	4

Rule-of-thumb sizing method: one method by which a flash tank can be sized is based on the assumption that the lb/hr of steam that can be flashed per square foot of water surface is three times the absolute pressure inside the tank would be:

$W_s/A = 3\ (P_2)$

Where:

A = water surface in square feet

P_2 = flash tank pressure in psia

W_s = lb/hr of flash vapor (steam)

TABLE 2

PERCENT OF FLASH STEAM FORMED

Initial steam pressure psig	Sat. temperature °F	Flash-tank pressure, psig										
		0	5	10	20	30	40	50	75	100	125	150
25	267	5.7	4.1	3.0	1.0	-	-	-	-	-	-	-
50	298	9.0	7.4	6.2	4.3	2.6	1.0	-	-	-	-	-
75	320	11.3	10.8	8.6	6.7	5.0	3.7	2.5	-	-	-	-
100	338	13.3	11.7	10.6	8.7	7.0	5.7	4.6	2.2	-	-	-
125	353	14.8	13.4	12.2	10.3	8.7	7.4	6.3	3.8	1.7	-	-
150	366	16.8	14.8	13.7	11.8	10.2	8.8	7.8	5.4	2.3	1.6	-
175	377	17.4	16.0	15.0	13.0	11.6	10.0	9.0	6.7	4.6	3.0	1.5
200	388	18.7	17.5	16.2	14.4	12.8	11.5	10.4	8.0	6.0	4.4	2.8
225	397	19.7	18.2	17.0	15.4	13.8	12.4	11.4	9.0	7.0	5.4	3.8
250	406	20.7	19.2	18.2	16.4	15.0	13.6	12.5	10.0	8.2	6.6	5.0
300	422	22.4	21.0	20.0	18.2	16.7	15.5	14.4	11.0	10.0	8.5	7.0
350	436	24.0	22.7	21.6	20.0	18.4	17.0	16.0	13.8	12.0	10.4	8.9
400	448	25.5	24.2	23.0	21.5	20.0	18.7	17.7	15.6	13.5	12.0	10.5
450	459	26.8	25.3	24.4	22.7	21.2	20.0	19.0	16.8	15.0	13.4	12.0
500	470	28.2	26.7	25.7	24.0	22.6	21.4	20.4	18.2	16.4	14.6	13.4
550	480	29.2	27.8	27.0	25.3	23.7	22.6	21.6	19.5	17.5	16.0	14.7
600	489	30.2	28.8	28.0	26.4	25.0	23.6	22.7	20.5	18.7	17.3	16.0
Total heat of flash steam, BTU/lb		1150.0	1156.0	1160.0	1167.0	1172.0	1176.0	1179.0	1185.0	1189.0	1193.0	1195.0
Latent heat of evaporation, BTU/lb		970.0	960.0	952.0	939.0	929.0	919.0	912.0	895.0	881.0	868.0	857.0
Heat of liquid, BTU/lb		180.0	196.0	208.0	227.0	243.0	257.0	267.0	290.0	309.0	324.0	338.0
Saturated water temperature, °F		212.0	228.0	240.0	259.0	274.0	287.0	296.0	320.0	338.0	353.0	366.0
Volume of flash steam, ft·lb		26.8	20.0	16.3	11.9	9.4	7.8	6.6	4.9	3.9	3.2	2.7

For horizontal tanks, this rule works satisfactorily and is often used. It usually oversizes the tank because it does not take into account the large steaming surface area of the condensate as it flows through the return lines to the flash tank.

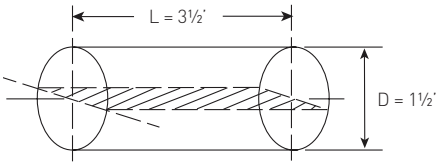

Example:
Assume the inlet pressure to the traps is 100 psig and the receiver pressure is 30 psig.
Also assume a total discharge of 10,000 lb/hr.

Solution:

1. From Table 2 determine that the flash is 7%.
2. Multiply total load by 7% 10,000 lb/hr x .07 = 700 lb/hr flash
3. Convert receiver pressure 30 psig to absolute pressure 30 + 15 = 45 psia
4. Solve the equation

$W_s/A = (P_2)$
$700/A = 3\ (45)$
$A = 5.185\ ft^2$

A horizontal tank with 1½ foot I.D. and 3½ foot internal length would provide sufficient area (Ph x 3½ = 5.25 ft^2)

Experience method: because it is difficult to arrive at an accurate figure for the total steaming surface in a condensate system, flash tank sizing is frequently based on experience. This method will be discussed with reference to Table 1. The first table develops the dimensions as well as the design of the tank; Figure 7.6 illustrates the height dimensions and identifies the several inlets and outlets.
Table 2 tabulates percentages of flash vapor formed at various values of flash-tank pressures and initial steam pressures. Its use is discussed later.
Table 1 gives separate ratings for (a) centrifugal flash tanks and (b) top-inlet tanks. Size for size, ratings for top inlet tanks are approximately 70% of those for centrifugal inlet tanks. In the centrifugal type, the condensate spirals around the inside of the tank as it falls to the bottom; the longer path provides more time and surface for steam flashing.
Separation of vapor from liquid in the tank is important. This is frequently improved by insertion of a screen or 'demister'.
When the type and size of the flash tank are being chosen, it should be born in mind that, if operating pressure is increased, the permissible velocity of flash steam entering the tank should be lowered. This prevents condensate from being carried over into the low pressure steam line.
Ratings in Table 1 have been worked out to avoid the carrying over of condensate. In addition, the steam outlet line should be amply sized because its diameter bears directly on the exit velocity and, of course, on the possibility of condensate being carried over.
Sizing a vented receiver: Table 2 can also be used when the size of a vented condenser is being selected (a flash tank not being included). This table gives the amount of flash vapor formed for various combinations of trap inlet and tank pressures.
If Table 2 is used in the selection of a vented receiver, the tank pressure should be assumed to be less than 5 psig, because the flash condensate will flow freely to the atmosphere. The amount of flash will actually be less than that for the maximum tank rating if the receiver is sized similarly to the tank.
In an existing installation, if the condensate pressure (and temperature) in the receiver is high enough to cause flashing and cavitation in the receiver pump, the difficulty can be alleviated temporarily by an increase in the size of the steam outlet or the vent. An alternate solution is to install a flash tank ahead of the receiver.

Example of calculating tank size (including flash vapor and its heat content)
As an example, in an industrial plant, there are 50 steam traps of several different sizes, discharging a total of 95,000 lb/hr of condensate from equipment operating at 150 psig. The condensate flows to a vented receiver that operates at 5 psig.
The first questions to be considered are: "How much flash vapor is formed if the condensate is discharged very near to steam temperature?" And "How much heat is available in the flash steam?"
To determine the amount of flash vapor formed, 150 psig is located in the left-hand column of Table 2 and lined up with the vertical column for a flash-tank pressure of 5 psig. This gives a figure of 14.8% for the amount of condensate that forms flash vapor. The quantity of flash vapor is thus 95,000 x 0.148 or 14,060 lb/hr.
To determine how much heat is available in this vapor, the latent heat of evaporation at 5 psig (at the vented receiver) is figured at 960 BTU/lb. The flash vapor thus provides nearly 13,500 million BTU/hr (14,060 x 960 = 13,497,600).
If this heat energy were used to heat water from 40°F to 140°F (a 100°F rise) and the water heater had an overall efficiency of 85%, 114,730 lb/hr of water would be heated (13,500,000 x 0.85 x $^{1}/_{100}$ = 114,730). That is nearly 230 gpm. In addition, the condensate from the water heater could still be returned to an atmospheric pressure receiver and used again in the boiler.
Now the question can be considered: What size and type of flash tank would be selected and what would be its dimensions?

From the above calculations, it is assumed that the 14,060 lb/hr of flash steam is available at 5 psig for heating equipment. In Table 1 the 5 psig value for flash tank pressure is located in the horizontal line of figures across the table. The vertical column under this figure gives the maximum ratings of flash tanks for this pressure (note that these are given in thousands of lb/hr so that 1.8, for example, means 1,800).
For the available 14,060 lb/hr of steam flow, a no. 5 tank with a maximum rating of 20,000 lb/hr (20.0 in the table) would be the proper size. The tank would have to be a centrifugal-inlet type because no standard top-inlet type shown in the table has sufficient capacity.
The lower part of the table gives the dimensions of the tank. The no. 5 centrifugal tank has a 60" diameter, an overall height of 88" and a 78". tank height. It has a 6" condensate inlet, an 8" steam outlet, and a 5" liquid outlet at the bottom. (These dimensions and connections are identified in Figure 7.6).

Flash tank sizing – alternate method
Another means of estimating the size of a flash tank and its associated piping is shown in the nomograph of Figure 7.7. The graph is entered from the left at given values of flow in lb/hr. As explained in the example below, the percent flash vapor table (Table 2) is used to determine the quantities of flash vapor, liquid, or total of the two, in lb/hr. All three of these flows are used in the estimation of dimensions.
The graph is entered at the proper flow value and pertinent tank dimensions are obtained at intersections with curves A through E.

As illustrated in Figure 7.7, the dimensions, in inches, are:
A = tank height, based on total liquid and flash flow
B = tank I.D., based on total liquid and flash flow
C = condensate inlet I.D. based on total liquid and flash flow
D = flash outlet I.D., based only on flash portion of arriving condensate. To assure adequate size, no allowance is made for condensation of flash.
E = liquid outlet I.D., based on liquid portion of arriving condensate; no allowance is made for vapor condensation

Example: condensate to be collected is 30,000 lb/hr. Nominal steam pressure is 150 psig Atmospheric pressure is to be maintained in tank.

Solution:
1. With reference to the table for percent flash vapor (Table 2), 150 psig to atmosphere gives 16.8% flash formed.
2. 30,000 lb/hr x 0.168 = 5,040 lb/hot flash vapor.
3. 30,000 – 5,040 = 24,960 lb/hr of liquid.
4. On Figure 7.7, at 30,000 lb/hr, for total liquid and flash flow, dimensions for A, B, and C are determined as 47 in, 21 in and 7 + in, respectively.
5. On Figure 7.7, at 5,040 lb/hot flash only, dimension D for the flash outlet I.D. is determined as 7 in.
6. On Figure 7.7, at 24,960 lb/hr of liquid only, dimension E for the bottom liquid outlet J.D. is determined as 2 in.
7. As a last step, applicable codes, standards, and the like should be consulted for final design of the tank, walls, supports, vents, reliefs, etc.

FIGURE 7.6
Sizing top or centrifugal inlet tank

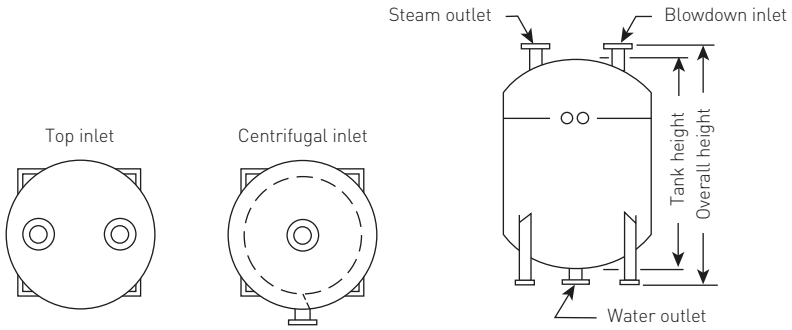

Design factors that save money

In the disposition of flash condensate, money can be saved and operating headaches avoided, if the following suggestions are heeded during the design of the condensate return system:

1. The return line should be sized to carry the flash vapor as well as the liquid condensate. Undersized lines cause high back pressures at the traps; this reduces their effectiveness.
2. All steam equipment in the process should be analyzed to determine: (a) which units provide a continuous supply of high temperature and high-pressure condensate that can be used, and (b) what equipment can operate on low-pressure flash condensate. Some equipment may be operating on boiler steam that is being reduced. Present operating pressures and temperatures of this equipment should be checked; they may be higher than necessary.
3. For each case, the economies of using flash condensate should be checked out. This kind of saving, which goes on from year to year, should be balanced against the cost of installing the flash-condensate recovery system.
4. The pipeline that carries the flash vapor should be sized to lessen pressure drop between the flash tank and the low-pressure steam equipment. Also, money can be saved if the flash tank and pipeline are insulated. Further, condensate return lines should be insulated so that the maximum amount of flash steam is recovered. If the flash L-P heating pipeline is long, drip traps should be installed.
5. The flash tank (and the receiver tank, if it is not vented) should be constructed in accordance with the ASME unfired pressure vessel code. Local codes, insurance company requirements, and plant standards should be checked. The role of applicable codes and standards cannot be minimized. ANSI B31.1 code for power piping contains specific requirements; for example, Para. 102.2.5(c).
6. Types of traps already in use should be checked. Some types discharge condensate near steam temperature; others require that the condensate cool considerably before they open and discharge. The former types produce more flash condensate and return the most heat. Some types of traps discharge subcooled condensate and the latent heat is lost to ambient if the system does not accommodate backup.
7. A systematic plan for using flash condensate can save heat, cut fuel costs, and improve process efficiency. For the best results, however, the whole system and each of its parts should be carefully analyzed.
8. The condensate pump must handle very hot liquid. The pump, controls, and associated piping should be carefully selected to assure proper operation. Under adverse conditions, the pump could 'vapor bind' or cavitate. When this occurs, the liquid will not be removed from the flash tank or receiver. These vessels will then accumulate liquid and possibly over-pressurize.
   In addition to reducing the effectiveness of the return system, over-pressurization can result in a safety hazard.
9. A frequent solution to over-pressurized tanks and systems is to drain them to sewer or grade. For vessels under these conditions, relief or safety valves should be considered. Again, applicable codes and standards for valve sizing, selection, and installation should be consulted.
   All design consideration of the condensate system must include a full review of ASME code and section 8 piping code. Applicable codes and engineering calculations are required for any condensate systems. This guide is not intended to discuss any specific ASME code requirements and each users must satisfy all code requirements prior to installation of any condensate system.

FIGURE 7.7

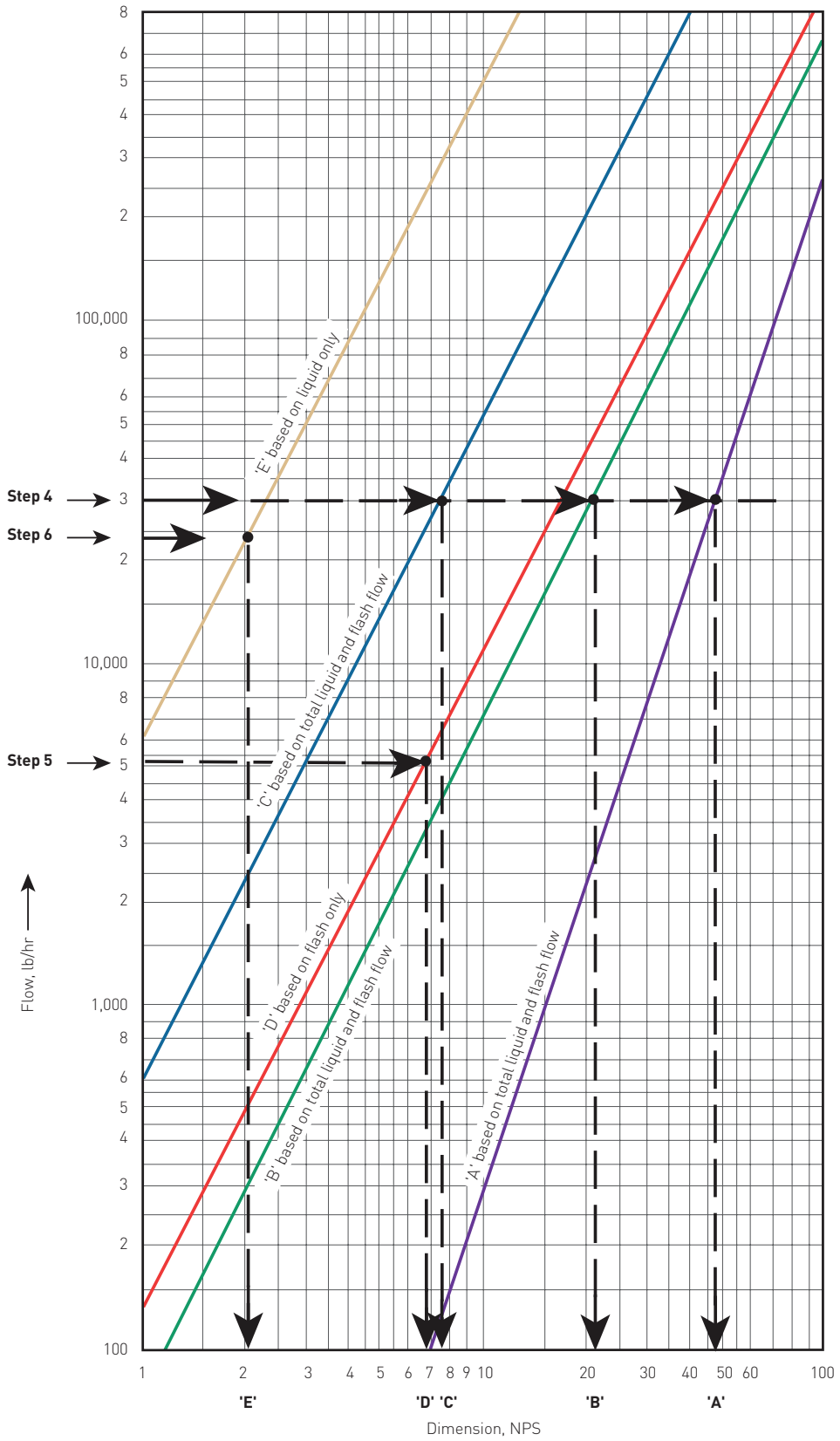
Step 4
Step 6
Step 5
'E' based on liquid only
'C' based on total liquid and flash flow
'D' based on flash only
'B' based on total liquid and flash flow
'A' based on total liquid and flash flow
Flow, lb/hr
100,000
10,000
1,000
100
1
2
3
4
5
6
7
8
9
10
20
30
40
50
60
100
'E'
'D' 'C'
'B'
'A'
Dimension, NPS

APPENDIX A

Listed below, alphabetically, are over 90 typical pieces of process equipment. They are identified by type and class (number and letter). To obtain a trap type recommendation, with appropriate installation tips, match the type and class designation to comparable reference on one of the following pages.

Equipment	Type	Class
Acid vat	1	A,C
Air blast coil	2	B
Air dryer	2	B
Air heater	2	B
Air preheater	2	B
Asphalt tank	1	A
Autoclave	4	A
Batch dryer	2	B
Bayonet heater	1	A
Belt press	3	A
Bleach tank	1	A,C
Blender	1	A
Brew kettle	1	B
Cabinet dryer	2	A,B
Calender	3	A
Candy kettle	1	B
Chamber dryer	2	B
Chamber, reaction	4	A
Cheese kettle	1	B
Confectioners' kettle	1	B
Continuous dryer	2	A,B
Conveyor dryer	2	A,B
Cooking coil	1	A
Cooking kettle	1	B
Cooking kettle, tilting	1	C
Cooking tank	1	B
Cooking vat	1	B
Cylinder dryer	3	B
Cylinder, jacketed	3	B
Double drum dryer	3	B
Drum dryer	3	B
Drum, dyeing	1	A,C
Dry can	3	B
Dry kiln	2	A,B
Drying roll	3	B
Drying room	2	A,B
Drying table	3	A
Dye vat	1	A,C
Dyeing bath	1	A,C
Dyeing drum	1	A,C
Dyer, package	1	A,C
Evaporator	1	B
Feed water heater	1	A
Festoon dryer	2	B
Fin type heater	2	A
Fourdrinier	3	A
Fuel oil preheater	1	A
Greenhouse coil	2	A

Equipment	Type	Class
Heat exchanger	1	A
Heating coil-air blast fin type	2	B
Heating kettle	1	B
Hot break tank	1	A,C
Hot plate	3	A
Kiers	1	A
Liquid heater	1	A
Milk dryer	3	A
Mixer	1	A
Molding press platen	3	A
Package dryer	1	A
Paper dryer	3	B
Percolator	1	B
Phono-record platen	3	A
Pipe coil, circulating air	2	B
Pipe coil, still air	2	A
Platens, press	3	A
Plywood platen	3	A
Preheater, fuel oil	1	A
Preheating tank	1	A
Plating tank	1	A,C
Pressure cooker	4	A,B
Process kettle	1	B
Pulp dryer	3	B
Reaction chamber	4	A
Reheater	1	A
Retort	4	B
Rotary dryer	3	B
Shell and tube heat exchanger	1	A
Sterilizer	4	A
Storage tank coil	1	A
Storage water heater	1	A
Stretch dryer	3	A
Submerged coil	1	A
Suction heater	1	A
Sugar dryer	2	B
Tank coil	1	A
Tank car coil	1	A
Tire mold press	3	A
Tray dryer	2	A,B
Tunnel dryer	2	A,B
Unit heater	2	B
Vat	1	A,C
Veneer platen/press	3	B
Vulcanizer	3	A
Water still	1	A
Water heater, storage	1	A
Water heater, instant	1	B

EQUIPMENT TYPE 1, CLASS A

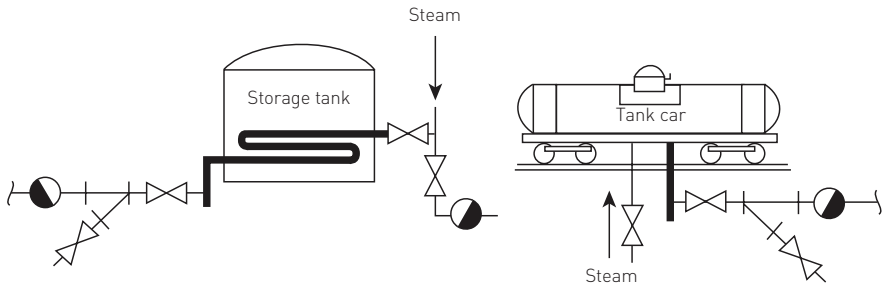

Steam heats a liquid indirectly through a metal wall

Typical equipment:
- Asphalt tank
- Reheaters
- Suction heaters
- Bayonet heaters
- Storage tank
- Tank car

Activity: coils used to heat liquids (often very viscous) in large weather exposed equipment frequently in remote locations. Several coils may be employed due to the large surface area of containers.

Steam pressures: will range from 5 to 125 psi with 40-75 psi being most typical. Generally constant pressure but occasionally will be modulated by pressure control valve.

Condensate loads: wide ranges in final temperature of material being heated and in ambient temperatures results in especially large range of loads. Startup loads are typically very heavy with seasonal weather variation having a significant influence.

Drainage to trap: gravity drainage is the normal condition.

Discharge from trap: generally to open drain. Condensate return systems are often missing due to distance from power house and low pressures.

Ambient conditions: vary as widely as weather conditions themselves – arctic to equatorial desert.

Air venting: prompt venting of air is desirable when frequent startups and rapid heating requirements are the norm.

Shock, vibration and water hammer: may be present during startup.

Dirt and corrosion: corrosion of coils can lead to contamination of steam system by material being heated.

Recommended traps
Desired characteristics: rugged, fail open, self-draining with good air handling

Installation tips:
Strainer with suitable blow-down valve should be placed ahead of trap. A suitable drop or collecting leg (2'-3') is desirable for bimetallic trap.

EQUIPMENT TYPE 1, CLASS B

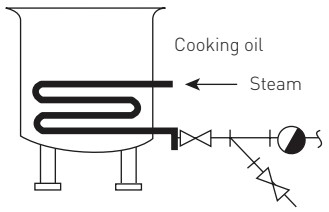

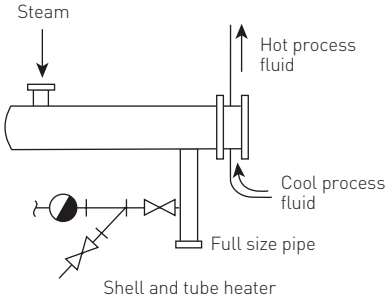

Steam heats a liquid indirectly through a metal wall

Typical equipment:
- Acid or bleach tanks
- Feedwater heaters
- Plating tanks
- Brew kettles
- Fuel oil preheaters
- Storage water heaters
- Dye vats
- Kettle coils
- Water heater, instant
- Evaporators
- Mixer or blenders

Activity: coils or jackets are used in tanks or vats for heating liquids in either batch or the continuous flow typical of shell and tube type heaters. Equipment is generally protected from the weather and of a size that one heating coil is most typical.

Steam pressures: will range from 15 to 150 psi with 40-75 psi most frequent. Some equipment may see pressure up to 600 psi. Pressures may be constant, but often modulated by pressure control valve.

Condensate loads: heavy startup loads, followed by smaller and steadier running loads are to be expected, but without the extreme swings of weather-exposed equipment.

Drainage to trap: gravity drainage is the normal condition.

Discharge from trap: generally to closed return with nominal pressures. Also overhead lift to elevated condensate header or return.

Ambient conditions: protection from weather may be partial or complete and equipment tends to experience smaller temperature swings.

Air venting: proper venting is important. Equipment is often run on regular daily or weekly schedules. Tendency is for total shutdown of equipment following completion of run or batch. Lack of adequate venting can cause condensate to be drawn back into heat exchange coils.

Shock, vibration and water hammer: improperly drained coils lead to shock and vibration during startup.

Dirt and corrosion: problems are aggravated by poor drainage and frequent shut downs.

Recommended traps
Desired characteristics: rugged, fail open, good air handling, rapid response rate, and discharge condensate at close to steam temperatures.

Installation tips: strainer with suitable blowdown valve should be placed ahead of trap. A vertical drop leg ahead of trap is also recommended.

EQUIPMENT TYPE 1, CLASS C

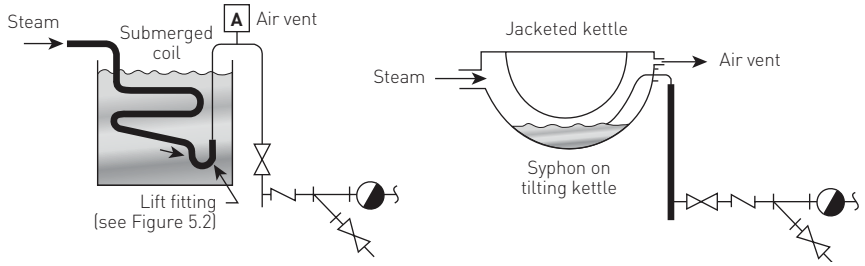

Steam heats a liquid indirectly through a metal wall

Typical equipment:
- Cooking kettle, tilting
- Candy kettle
- Embossed coils
- Tanks with elevated discharge

Activity: liquids or materials are heated or cooked in jacketed kettles or tanks with submerged coils. All require raising discharge to the trap.

Steam pressures: generally 5 to 125 psi with most frequently experienced pressures in the middle of this range.

Condensate loads: startup loads heaviest with running loads lighter.

Drainage to trap: condensate is passed to trap through use of a lift fitting that creates a water seal or reaches trap through syphon tube in case of tilting kettle.

Discharge from trap: may be either to an open drain or a closed pressurized return.

Ambient conditions: equipment is generally protected from the weather and unlikely to see extreme temperatures (either) hot or cold.

Air venting: frequent startup and the need to get equipment hot quickly requires a good air venting.

Shock, vibration and water hammer: may be present during startup.

Dirt and corrosion: poor drainage and frequent startups increases potential for corrosion.

Recommended traps
Desired characteristics: resistant to steam binding, rapid response, discharge condensate at close to steam temperatures, rugged, fail open, resistant to water hammer and shock.

Installation tips: auxiliary air vents are helpful. Lift leg or syphon should be a smaller pipe size than trap to reduce tendency for steam binding.

EQUIPMENT TYPE 2, CLASS A

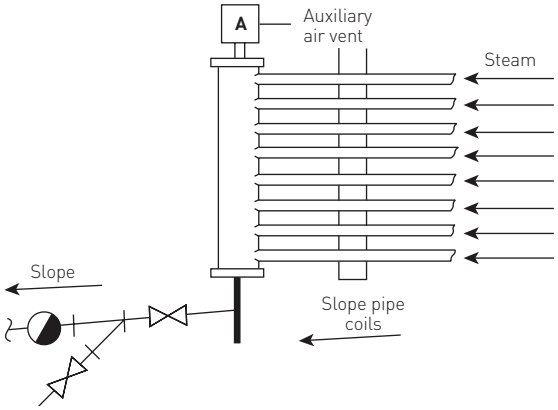

Steam heats air/gas indirectly through a metal wall

Typical equipment:
- Dry kiln (without fans)
- Drying room
- Greenhouse coil

Activity: space heating or drying of materials in enclosed equipment with natural air circulation. Fans or blowers are not employed.

Steam pressures: typically 5 to 50 psi with fluctuation occurring during startups. Normally constant pressure without control valves.

Condensate loads: will vary widely depending on the size of the exposed surface area of the coils. Loads will be heaviest at startup and rather steady thereafter.

Drainage to trap: gravity drainage is important with amply sized collecting leg required to prevent condensate backup into coils.

Discharge from trap: gravity to closed return, low pressure to vacuum.

Ambient conditions: generally protected from weather because installation is inside building or structure. Seasonal changes can expose shut-down system to freezing conditions.

Air venting: important to assure fast startups.

Shock, vibration and water hammer: on startup hot condensate, flowing into improperly drained coils or return system, can create shock and vibration.

Dirt and corrosion: may be heavy due to seasonal use, long shut-downs possibly in flooded conditions.

Recommended traps
Desired characteristics: rugged, good air handling, medium response rate, corrosion resistant.

Installation tips: provide collecting leg and strainer with suitable blowdown valve ahead of trap.

EQUIPMENT TYPE 2, CLASS B

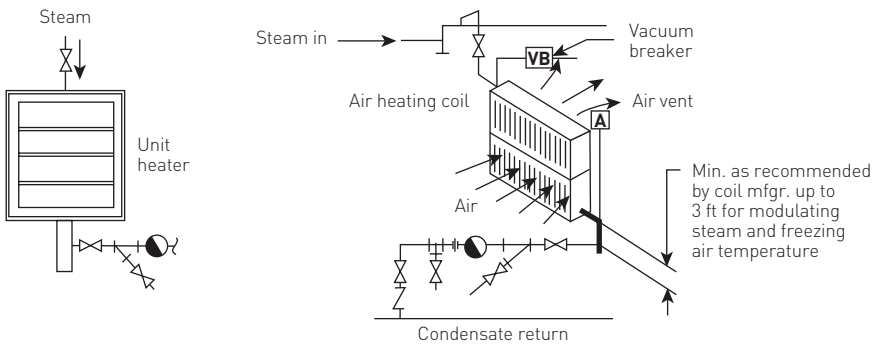

Steam heats air/gas indirectly through a metal wall

Typical equipment:
- Chamber dryer
- Pipe coils (circulating air)
- Conveyor dryer
- Air preheater
- Dry kiln (with fan)
- Unit heater
- Fin coil

Activity: forced circulation of air over or through coils for space heating. Also the drying or heating of materials in either open or closed containers or chambers with air circulation created by fans or blowers.

Steam pressures: generally 25 to 150 psi with 50-75 psi most common. Pressures can vary greatly due to cyclic off-on action, the changing of dampers and mix of makeup air. Sudden drafts of freezing outside air can lower coil steam pressure to below atmospheric.

Condensate loads: vary greatly due to variety of controls and changing inlet air temperatures. Coils in series will have highest loads on first coil with decreasing loads on successive coils. High loads and low pressures will occur when fan starts and cold air is blown over coils.

Drainage to trap: must be by gravity with a sufficiently large collecting leg to momentarily store condensate until trap can open and discharge.

Discharge from trap: generally, discharge is to a closed return system.

Ambient conditions: freezing is a major concern when cold outside air can be drawn into system. Dry kilns and heaters in hot areas may expose traps to such high temperature that some traps are adversely affected.

Air venting: very important to assure rapid startup. vacuum breakers are recommended to facilitate coil drainage on shut-down.

Shock, vibration and water hammer: often from return lines on startup or improperly trapped steam supply. Can also occur due to inadequate drainage from coils resulting from changes in load, pressures or the sagging of coils.

Dirt and corrosion: corrosion can be a significant problem if coils are manufactured of dissimilar materials.

Recommended traps
Desired characteristics: rugged, fast responding, hot discharge, fail open, self-draining good air handling when subject to frequent startups.

Installation tips: trap should be well below unit (2 ft to 3 ft) with amply sized collection leg. Air vents on larger equipment to aid in startup. Vacuum breakers help assure complete drainage of coils on shut-down. This is especially important if freezing temperatures are possible. Strainers with blow-down valves and test 'T' reduce maintenance and simplify trap troubleshooting.

EQUIPMENT TYPE 3, CLASS A

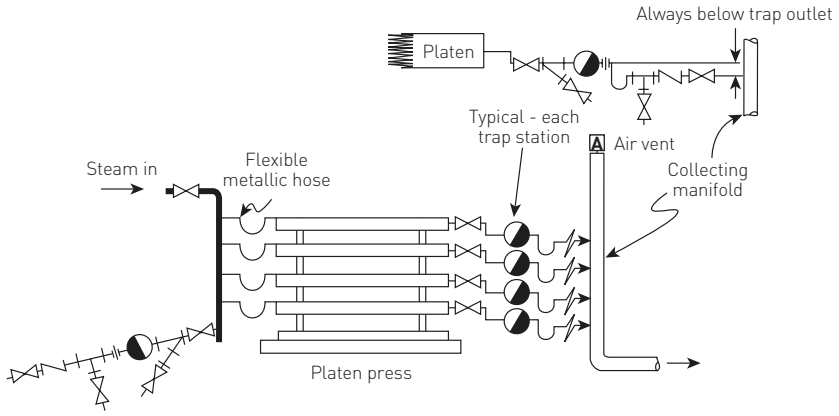

Steam heats a solid or slurry indirectly through a metal wall

Typical equipment:
- Belt press
- Molding press
- Tire mold press
- Drying table
- Plywood press
- Vulcanizing equipment

Activity: molding, bonding, curing, drying and vulcanizing materials such as plastics, rubber, particle board, and similar substances. Generally a 'finished' form is being developed using platens or steam heated molds.

Steam pressures: generally in the range of 50 to 150 psi. Batch operation associated with platens and vulcanizing presses can produce wide changes in pressures.

Condensate loads: are quite variable. Platens and presses have cyclic loads that are very high during warming and then much lower when maintaining temperatures. Some platens have cold water introduced to arrest or control the time temperature cycle.

Drainage to trap: typically drainage to the trap is by gravity.

Discharge from trap: most frequently to a closed return system.

Ambient conditions: processing is generally indoors. Temperatures are frequently hot due to heat from equipment.

Air venting: an important consideration for this class of equipment due to the frequency of startups.

Shock, vibration and water hammer: usually comes from return systems or improperly trapped steam supply. Rapid formation of condensate slugs produce shocks as will cold water injection into molds.

Dirt and corrosion: are significant factors, especially in platens with air venting. Frequent shut-downs encourages corrosion.

Recommended traps
Desired characteristics: rugged, having hot discharge and fast response. Good air handling due to frequent startup of equipment. Failure mode should be 'open'.

Installation tips: mount trap below platen's lowest (open or closed) position. Flexible hoses should be carefully selected for materials and proper bore diameter to assure easy drainage. They should be connected to provide positive head to the trap when it is stationary and downstream of hose. It is preferred that the trap be mounted on and below the platen outlet. A suitable flexible hose should be connected to the trap outlet and the drain header. The connection at the drain header should always be below the trap outlet, whether the platen is open or closed.

EQUIPMENT TYPE 3, CLASS B

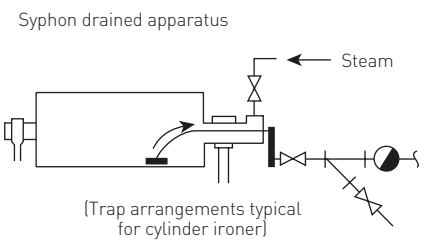

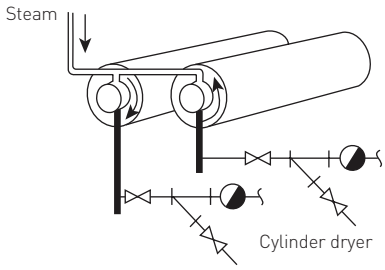

Steam heats a solid or slurry indirectly through a metal wall

Typical equipment:
- Calender
- Paper dryer
- Drum dryer
- Dry can
- Pulp dryer
- Fourdrinier
- Rotary dryer

Activity: continuous drying of materials is being performed by exposure to the heated surfaces of rotating cylinders or drums. Commonly used in the manufacture of felt, asbestos, rubber, textiles, paper and other sheet or fibrous materials, including foods and slurries of chemicals.

Steam pressures: generally in the range of 75-150 psi. Once warm up is complete, pressures are reasonably constant.

Condensate loads: high startup loads and moderate running loads are typical. When many dryers are in series, the first several have highest loads and those toward the end have progressively smaller loads.

Drainage to trap: syphon drainage is standard practice. Condensate moving up the syphon from the outer rim to the center of the drum is subject to reheating and flashing-steam binding of trap is common problem.

Discharge from trap: discharge is generally to a closed condensate return system.

Ambient conditions: generally hot due to heat from the equipment.

Air venting: an important requirement during startup when drums or cylinders contain large amounts of air.

Shock, vibration and water hammer: usually come from return systems or improperly trapped steam supply. Faulty or broken syphons can produce shocks.

Dirt and corrosion: can be a significant factor and is related to frequency of startups.

Recommended traps
Desired characteristics: rugged, having hot discharge and fast response. Ability to handle flash steam by means of small bleed passage is a necessity. Failure mode should be 'open'.

Installation tips: mount trap below cylinder. If flexible hose is used, care should be taken to assure it has an adequate bore and liner, materials suitable for steam service.

EQUIPMENT TYPE 4, CLASS A

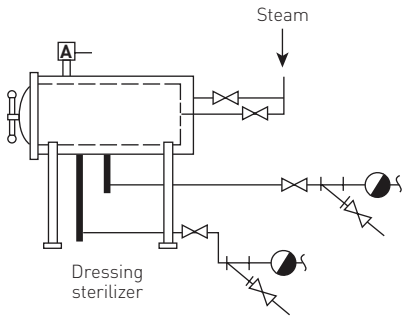

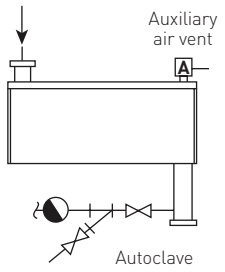

Steam heats a solid directly

Typical equipment:
- Reaction chamber
- Retort
- Pressure cooker

Activity: heating a material or producing a chemical reaction in an enclosed pressure vessel, by direct exposure to live steam. Condensate forms on product surfaces.

Steam pressures: range from 15 to 150 psi with 15 to 50 being most typical. When the process is temperature controlled, steam temperatures can vary. On startup, pressures may be unexpectedly low.

Condensate loads: can be very large on startup and quite low after temperature is reached.

Drainage to trap: must be gravity drainage with trap well below equipment.

Discharge from trap: good condensate drainage after the trap is especially important in preventing contamination due to flooding.

Ambient conditions: equipment is usually in a building and may be subject to generally hot conditions.

Air venting: very important consideration due to potentially large volumes involved. Separate air vents are frequently used.

Shock, vibration and water hammer: shock may be generated in the return system and as a result of condensate forming in slugs.

Dirt and corrosion: may be a problem because condensate can be contaminated from contact with material being heated. Because of frequent startups and exposure to air, corrosion problems can be expected.

Recommended traps
Desired characteristics: fail open and self draining desirable. Hot discharge and fast response with good air handling a must. Good dirt handling especially required in some applications.

Installation tips: place strainer (extra large where contamination is heavy) with blowdown valve ahead of trap and position for frequent servicing. Good drainage after trap is especially important with outdoor installations where freeze-up can be a problem. Bellows thermostatic trap mounted in vertical-up position is a good auxiliary air vent.

HOW TO TRAP STEAM MAINS

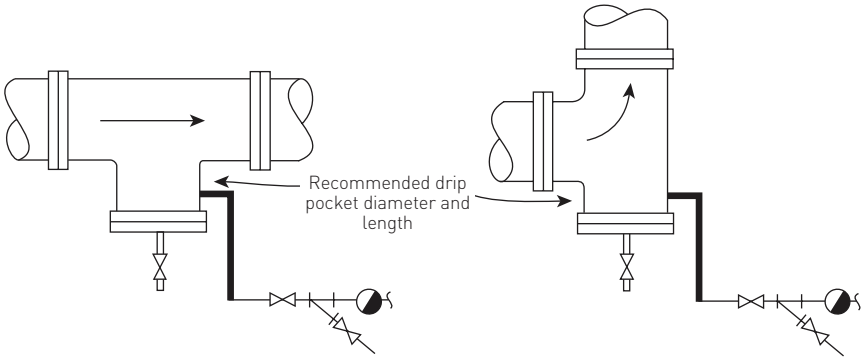

Activity: removal of condensate from steam mains to protect steam equipment, prevent water hammer and maintain steam quality between boiler and point of use.

Steam pressures: generally constant with some seasonal variation. Typical industrial pressures 100-600 psi. Utilities, pulp and paper, and chemical plants frequently higher.

Condensate loads: usually small and constant, 10 to 50 lb/hr per trap station except during startup when loads can be quite heavy. Larger at ends of mains especially if earlier trapping has been inadequate.

Drainage to trap: most commonly by gravity with trap below steam main. Occasionally piping in trenches will require lift fitting from a collector when trap is above main.

Discharge from trap: commonly to closed and pressurized return systems but also to open atmospheric drains.

Ambient conditions: vary widely. Range from underground tunnels to outdoor exposure to Arctic winters. Freezing is the most common concern.

Air venting: need is minimal because startups are infrequent. Some pipelines will have manual valves as air vents at startup.

Shock, vibration and water hammer: generally result from inadequate drainage of condensate Moving at high velocity. Excessive warm-up rates can produce thermal shocks in return system. Also, negative pipe pitch and inn properly located drip traps will produce problems.

Dirt and corrosion: no unusual problems beyond the oxides and dirt particles typical of any steam system.

Recommended traps
Desired characteristics: fail open, self draining, install in any position. Tolerant of superheat. Capability of operating over wide pressure ranges aids standardization.

Installation tips: use of a standard pipeline 'T' in main provides a drainage pocket so that condensate can get to a trap. An extension to 'T' is sometimes used to increase its storage volume. Strainers with blowdown valve and test 'T' are recommended in addition to standard block valves for maintenance and checking.

HOW TO ESTIMATE STEAM MAIN CONDENSATE LOADS

Condensate load, C_1
(Warming up)
lb/hr per 100 ft of pipe

Nominal pipe size	Operating steam pressure, psi						
in	10	100	200	300	400	600	1000
1	14	16	17	19	19	20	26
1½	22	25	27	30	32	36	42
2	30	35	38	40	46	48	57
3	60	69	74	78	81	92	108
4	93	99	107	113	126	131	154
6	166	185	198	208	220	239	280
8	250	277	298	313	329	357	414
10	315	352	375	395	415	449	521
12	337	419	448	472	495	541	623
14	416	461	493	519	545	591	686
16	478	532	578	592	628	681	789
18	536	596	638	670	703	763	884
20	605	673	719	757	793	860	997
24	721	802	857	900	945	1024	1189

Assumed conditions:

Warm-up rate, 400°F	Extra strong pipe
Ambient, 0 deg. °F	Wind, 0 MPH
Insulation 85% eff.	10% additional load for warming insulation
	50% of running load

Condensate load, C_2
(Normal)
lb/hr per 100 ft of pipe

Nominal pipe size	Operating steam pressure, psi						
in	10	100	200	300	400	600	1000
1	3	5	7	9	10	13	13
1½	4	8	11	13	15	19	26
2	5	10	13	16	19	24	33
3	8	15	20	24	28	35	49
4	10	19	26	31	36	45	63
6	15	29	38	46	53	66	93
8	20	38	50	60	69	87	121
10	25	47	62	75	87	108	151
12	30	56	74	89	103	128	179
14	33	62	81	98	113	141	197
16	38	70	93	112	129	161	225
18	43	79	105	126	145	181	253
20	48	88	116	140	161	202	280
24	57	106	140	168	194	242	337

Assumed conditions:
Ambient. 0 deg. °F: insulation efficient. Saturated steam, zero (0) wind velocity; pipe surface temperatures same as steam temperature.
Note: ambient temperature, wind and rain can influence loads.
Comments:
- Increasing ambient temperature from 0°F to 100°F will decrease condensate load approximately 30%.
- Increasing wind velocity from 0 mph to 15 mph will increase condensate load approximately 225%.

HOW TO TRAP STEAM TRACERS

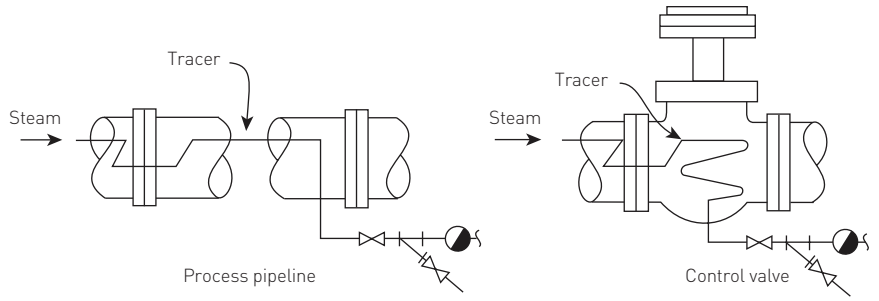

Activity:
- Maintaining the temperature of process material such as asphalt, sulfur, wax or other chemicals to aid in handling by preventing congealing, solidification or separation.
- Prevent water lines, safety showers, pumps, valves, etc. from freeze-ups.
- Maintain uniform temperatures in and around instruments.

Steam pressures: typically 75-400 psi when tracing process materials, but 15-150 psi more common in freeze protection applications. Below 40 psi, condensate return problems increase in closed system when pressure differentials are not adequate for good drainage.

Condensate loads: low (0-40 lb/hr) and relatively steady, varying with seasonal changes. Long tracing runs, poor insulation, submerged lines can produce higher loads.

Drainage to trap: most frequently by gravity, but lift drainage can be experienced when tracing occurs below grade in trenches.

Discharge from trap: by gravity to open drains or closed returns-some pressurized and elevated.

Ambient conditions: freezing is the main concern. Most tracing is exposed to the weather but is also used in unheated buildings.

Air venting: of limited importance when tracing process materials because of infrequent startups. If startups are frequent during seasonal changes, freeze protection systems may have modest air venting needs.

Shock, vibration and water hammer: a minimal problem.

Dirt and corrosion: generally modest in tracing of process lines. Dirt can be a problem in freeze protection systems due to corrosion products in seasonally activated lines and light sluggish condensate flows.

Recommended traps
Desired characteristics: fail open, self-draining, small and lightweight as frequently trap is not well supported. Easy checking is helpful as many traps are installed.

Installation tips: when possible, locate traps close together using condensate return manifold. This also simplifies maintenance and trap checking. Provide strainers, test 'T' and suitable block valves. Assure adequate pressure differential across trap for good drainage when discharging to a closed and elevated return system.

APPENDIX B – INTRODUCTION

This section is intended for those particularly interested in the laboratory testing technology of steam traps. It recommends test methods and procedures for use in making comparative evaluations of steam traps.
Steam trap checking is the process of determining in the field, whether or not a trap is functioning properly. (Refer to Chapter 6, Steam trap maintenance and troubleshooting). Steam trap evaluation is the practice of quantifying specific performance characteristics and then making judgments about the trap's suitability for various types of service. This requires the controlled conditions and precise measurements of a qualified laboratory.

Evaluation criteria
Selecting the performance-related criteria that should be evaluated requires a thorough knowledge of the specific needs of differing steam trap applications. For example, process traps and protection traps serve different needs and should be evaluated accordingly. Five important evaluation criteria can properly be listed in different relative orders of importance, depending on the intended service of the trap being evaluated.

Protection (drip and tracer) traps
1. Steam loss
2. Back pressure limit
3. Predominant failure mode
4. Capacity
5. Air handling on startup

Process traps
1. Capacity
2. Air handling on startup
3. Predominant failure mode
4. Back pressure limit
5. Steam loss

While the relative significance of these various criteria can be debated, it should be clear that an evaluation program should be tailored to specific application needs.

Criteria definitions
- **Steam loss:** the amount of saturated steam discharged during successive condensate removal operations expressed in pounds per hour. A measure of trap efficiency.
- **Capacity:** the amount of condensate that can be discharged continuously from a trap in a given period of time and under specific conditions or pressure differential and condensate temperature expressed in pounds per hour.
- **Back pressure limit:** back pressure limit is the maximum amount of back pressure that can be applied to the discharge side of the trap without causing malfunction. (A decrease in discharge capacity with increasing back pressure is normal and not considered a malfunction). Back pressure limits are expressed as the ratio of back pressure to supply pressure (in absolute units) expressed as a percent.
- **Failure mode:** the manner in which a trap is most likely to malfunction. It can be either open or closed, depending on the specific design.
- **Air handling on startup:** the capability of steam trap to vent air and other non-condensable gases during cold startup conditions. At the present time there is no generally recognized expression for this term. In its testing programs, Emerson expresses air handling capability in terms of actual cubic feet per hour passed under specific conditions of inlet and differential pressures.

Evaluation philosophy
In order to obtain meaningful results, traps should be tested under controlled conditions that are typical of actual field installations.
A minimum of three (3) identical traps is recommended for testing. This avoids basing conclusions on a single unit that may not be representative of the model being evaluated, due to manufacturing or other variations.
Well established trap manufacturers usually publish reliable technical information. Unfortunately, the test conditions used are not always clearly stated, making valid competitive comparisons difficult, if not impossible. Published catalog information should be used with caution when employed for this purpose. Evaluative judgments are improved when comparisons between trap types (thermodynamic, mechanical and thermostatic) are made in addition to the comparisons between traps of a common technology.

Emerson standard test conditions
Emerson has established its own test conditions for use when making comparative evaluations of all types of traps:

1. **Steam loss**
   - Protection traps: 100 psi supply, nominal condensate load 10 lb/hr
   - Process traps: 100 psi supply, nominal condensate load at 10% of stated condensate capacity at the same operating pressure.
2. **Capacity-all traps**
   - 100 psi supply.
   - Traps that discharge near saturated conditions should be tested within 5°F of saturation temperature.
   - Subcooled traps, usually thermostatic types, have a capacity that varies with the amount of condensate subcooling. These traps should be tested using different levels of condensate subcooling so that their relationship between subcooling and capacity can be properly established.
3. **Back pressure limit-all traps**
   - 100 psi supply, condensate loads same as steam loss test.
4. **Air handling**
   - 100 psi supply, condensate loads same as steam loss test.
5. **Characteristics such as failure mode or freeze resistance** can generally be evaluated satisfactorily from published data and technical analysis.

Steam loss – test method
Condensate discharge is collected from a trap operating under specific and constant conditions. Heat balance calculations determine the amount of steam discharged with the condensate. The test is referred to as a calorimeter test. Constant and controlled conditions for the duration of the test are required to obtain meaningful results. Atmospheric conditions such as ambient temperature must remain constant and error-causing influences such as drafts must be avoided.
Figure B.2 shows a typical calorimeter testing arrangement. Figure B.3 is a data sheet showing the type of information required and heat balance calculations used in determining steam loss. It has been completed using test data representative of a properly performing thermodynamic disc trap.
A note of caution: there are practical limits to the accuracy that can be achieved in this steam loss test. The applicable code (ANSI PTC 39.1) states: "The average result from three consecutive tests must agree within 10 percent or 1 pound per hour, whichever is greater". Obviously energy efficiency judgments concerning steam traps can not properly be based on differences that are smaller than the accuracy of the test itself.

FIGURE B.2
Typical test arrangement for steam loss tests

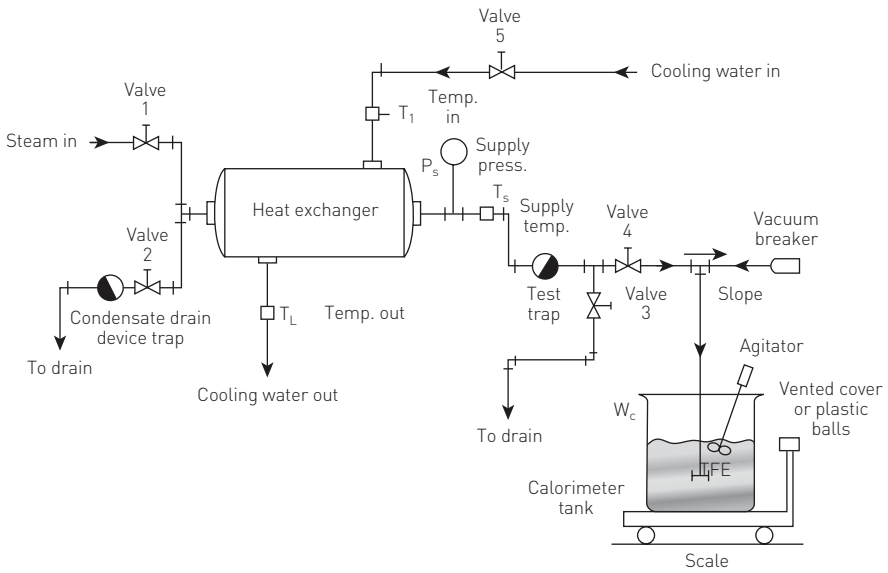

Test procedure

Start with all valves closed and tank empty (reference Figure B.2).

1. Open valves 1, 2 and 3 to permit trap draining steam inlet line and test trap to operate at test pressure P_s.
2. During warm-up, weigh and record weight of empty calorimeter tank W_t, and record steam pressure Ps and steam temperature T_s.
3. Open valves 5 and 6 to allow flow of cooling water through heat exchanger to create desired condensate load on test device. Allow system to come to equilibrium.
4. Fill calorimeter tank with enough water having a temperature T_1 at least 15°F below ambient temperature T_a to obtain a test run of reasonable duration. Weight and record water temperature T_1 and weight of water plus calorimeter tank, T_L.
5. Rapidly close valve 3 and open valve 4. Start timing interval when valve 4 is open. (Use of a 3-way valve is recommended to facilitate rapid closing and opening).
6. Agitate the water in the calorimeter tank as necessary to ensure uniform water temperature.
7. When the temperature of the water in the calorimeter tank is as many degrees above ambient as the initial temperature was below, rapidly close valve 4 and open valve 3, simultaneously recording the elapsed time, then the final water temperature T_2 , and weight of water plus calorimeter tank, W_2.
8. Enter data in the calorimeter test data sheet and calculate steam loss. Refer to steam tables Appendix D for enthalpy values (i.e., sensible heat of liquid and latent heat of evaporation) required by data sheet.

For reference, calorimeter test guidelines are published in the ANSI/ASME PTC 39.1 performance test code for condensate removal devices by the American Society of Mechanical Engineers, United Engineering Center, 345 East 47th Street, New York, N.Y. 10017

Discharge capacity – test method

Condensate discharge capacity of steam traps varies with each type and make. Interest is directed to two distinct flow rates: (1) cold condensate capacity for startups; and (2) hot condensate capacity that will be available in the actual installation.

For on-off type traps that discharge near steam temperature, usually thermodynamic and mechanical traps, the discharge capacity is primarily a function of differential pressure and is proportional to the square root of differential pressure. (For estimating purposes, the steam temperature discharge capacity is approximately ⅓ of the cold water capacity due to the choking effects of flash steam and changes in liquid density.)

For certain modulating traps (usually bimetallic thermostatic type traps), the discharge capacity is a function of both differential pressure and temperature. The discharge capacity will increase with increasing amounts of condensate subcooling until the maximum capacity is reached. Capacity data for a modulating type trap must reference both temperature and pressure.

Typical condensate capacity discharge curves are presented in Figures B.4 and B.5. their different form results from the different operating principles of the traps being tested.

FIGURE B.3
Yarway calorimeter test data

YARWAY CALORIMETER TEST DATA

				Log #:	0973	
Trap type:	Yarway 720 A	**Size:**	½"	**Date:**	18 May 1983	
Age and service:	1 year, 150 psi drip			**Test station:**	5	
Data recorded by:	D. Kalix		**Trap number:**	1	1	1
			Run number:	1	2	3
P	Nominal steam test pressure (psig)			100.00	100.00	100.00
P_a	Barometric pressure (psia) 1 in. Hg. = .4914 psia			15.00	15.00	15.00
P_s	Inlet steam pressure (psia)			115.00	115.00	115.00
T_s	Inlet steam temperature (°F)			338.00	338.00	338.00
H_{fs}	Enthalpy of saturated liquid at T_s (BTU/lbm)			309.10	309.10	309.10
H_{fgs}	Latent heat of evaporation at T_s (BTU/lbm)			880.60	880.60	880.60
W_c	Weight of container (lbm)			15.45	15.45	15.45
W_e	Equiv. water weight of container = *W_c x .225 (lbm)			2.70	2.70	2.70
W_1	Weight of initial water + container (lbm)			40.70	40.70	40.70
T_a	Ambient temperature (°F)			70.00	69.00	68.00
T_1	Initial temperature of water (°F)			59.10	60.50	58.80
H_{f1}	Enthalpy of water initially at T_1 (BTU/lbm)			27.16	28.56	26.86
W_2	Weight of final water plus container (lbm)			42.95	45.95	43.20
T_2	Final temperature of water and condensate (°F)			81.00	78.00	78.00
H_{f2}	Enthalpy of water finally at T_2 (BTU/lbm)			49.02	46.02	46.02
Øt	Time of test (seconds)			596.00	560.00	512.00
ØW	Weight added to scale = $W_2 - W_1$ (lbm)			2.25	2.10	1.95
E_1	Initial total enthalpy	$= (W_1 - W_c + W_e)H_{f1}$		759.00	888.00	766.00
		$= (W_1 - 12.75)H_{f1}$ (BTU)				
E_2	Final total enthalpy	$= (W_2 - W_c + W_e)H_{f2}$		1480.00	1528.00	1401.00
		$= (W_2 - 12.75)H_{f2}$ (BTU)				
$E_2 - E_1$	BTU provided by discharge (lbm/hr)			721.00	640.00	635.00
E_s	Discharge enthalpy of saturated water = H_{fs} x ØW			695.00	649.00	603.00
Total discharge = ØW x 3600/Øt (lbm/hr)				13.60	13.50	13.70
Steam loss = $\frac{W_L = (E_2 - E_1) - E_s}{H_{fgs}} \times \frac{3600 \text{ (lbm/hr)}}{Øt}$				0.20	-	0.30
			Cycles/minute:	5.00	3.00	4.00
			Back pressure limit:	-	-	-
			Discharge temperature (°F):	336.00	336.00	337.00

NOTES

Back pressure limit test not performed

* Excludes weight of nipples and valve

FIGURE B.4
Condensate capacity near steam temperature (typical for on-off type traps)

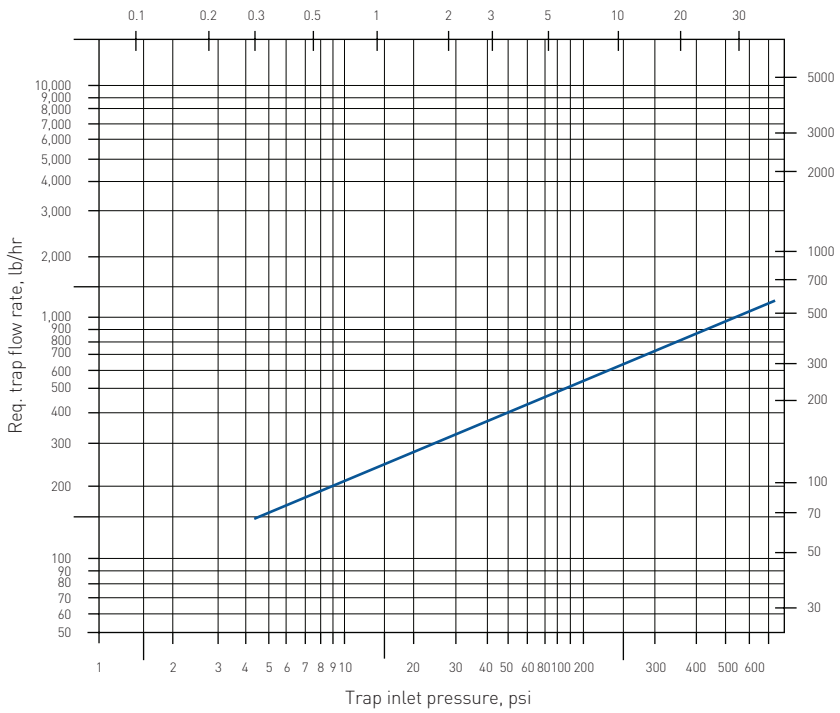

FIGURE B.5
Condensate capacity vs discharge temperature (typical for subcooled thermostatic traps)

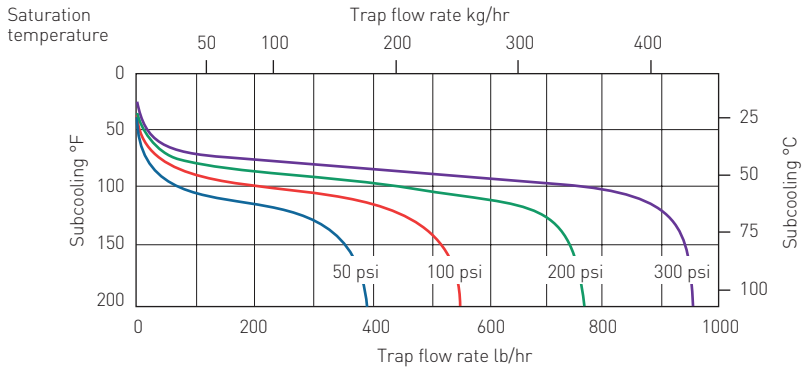

Discharge capacity test procedure (dynamic weight method)

Start with all valves closed (reference Figure B.6).

1. Open valves 1 and 2 and fill accumulator tank to desired level. Close valve 1.
2. Open valve 3 and heat water in accumulator tank to desired temperature. Close valves 2 and 3 and open valve 4.
3. Fill barrel approximately half full of cold water. The end of the discharge pipe should be under water in the weigh tank. Balance scale lever arm, then add an appropriate weight to allow time for opening and closing valves.
4. Open valves 5 and 6 to heat pipe and test trap.
5. When thermal equilibrium is reached, close valve 6 and open valve 7.
6. When scale lever arm is balanced, start timing and add an appropriate weight to the yoke corresponding to the number of pounds of condensate to be collected. This should be less than the amount necessary to cause boiling of the water in the weigh tank.
7. When scale lever arm is again balanced, stop timing and close valve 5.
8. Observe and record the following data:
   a. Elapsed time
   b. Ambient temperature T_a (°F)
   c. Barometric pressure, P_a (psia)
   d. Steam pressure and temperature, P_s (psig) and T_s (°F)
   e. Weight of condensate plus barrel at start and finish, W_e (lb)
   f. Initial and final values of the following:
      (i) Temperature differential (T_5 – Tcl °F)
      (ii) Inlet pressure, P_1 (psig)
      (iii) Back pressure, P_2 (psig)
9. Calculate capacity in lb/hr.

Discharge capacity test guidelines are published in ANSI/ASME PTC 39.1 performance test code for condensate removal devices.

Back pressure – test method

At the present time there is no generally accepted standard procedure for performing back pressure tests. Experience has shown that back pressure limitations can be determined easily by installing a trap into a test rig having controlled inlet conditions, and with an outlet connected to a receiving tank, whose pressure can be regulated, to simulate a closed return system. Either steam or air may be used to pressurize the tank. Assure its pressure rating is adequate for the test. This test is usually performed on thermodynamic traps.

FIGURE B.6
Typical arrangement for discharge capacity testing (dynamic weight method)

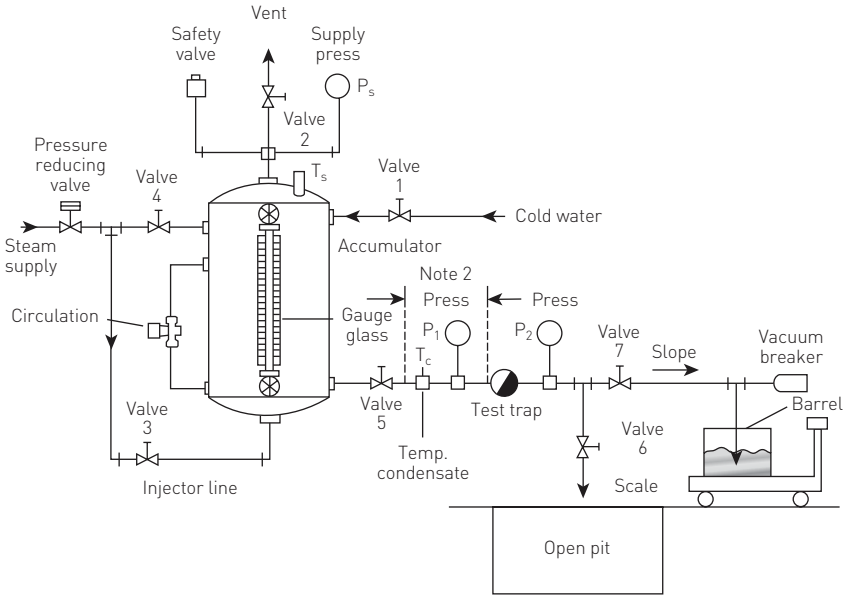

NOTES

1. The piping from the accumulator to the test device shall be of the same diameter as the inlet connection on the test device. The inlet to the piping from the accumulator shall be in the form of a well rounded entrance.
2. The distance between the sensors and the test device shall not exceed 20 internal pipe diameters.

Test procedure (for trap closing limit)

1. Confirm normal operation of the trap with a suitable listening device.
2. Gradually increase the back pressure in steps of 5 psi, waiting approximately three minutes after each adjustment to allow the trap time to stabilize itself. Listen for the opening and closing action.
3. When the trap stays open and stops functioning, the back pressure limit has been reached.
4. Confirm the limit by repeating the test 2 or 3 times.

Test procedure (for discharge temperature reduction)

In a similar manner the effects of back pressure on discharge temperature can be established. Depending on the type and make of trap, 40°F to 120°F reductions in discharge temperature can result when subjecting it to back pressures up to 80%.

1. Install the trap (usually a bimetallic thermostatic trap) in the same system. Provision to measure the inlet temperature of the trap is required.
2. Allow 3 to 5 minutes for the trap to stabilize itself before recording the inlet temperature.
3. Increase back pressure in 5 psi increments. Allow sufficient time for the trap to stabilize its operations and the record inlet temperature.

Repeat the process over the desired back pressure testing range in order to establish a complete profile of discharge temperature reduction.

Note: in evaluating the effects of back pressure on a steam trap, it is important that the condensate flow not exceed the trap's capacity for the pressures involved. 'Flooding' of the trap will give erroneous results.

Air handling capability – test method

Currently there is no generally recognized test standard for evaluating a steam trap's air handling capability. Emerson has developed a simple and reliable method for comparing the relative air handling capabilities of various types of traps. Figure B.7 is a schematic representation of its air handling test arrangement. The test requires the installation of a trap in a steam line and allowing it sufficient time to heat up and stabilize its performance. Then a known volume of air is injected (under supply pressure conditions) into the supply line ahead of the trap. The time required to discharge the air is then measured. By comparing the times required to remove the air, it is possible to rank various types of traps according to their relative air handling capability.

Test procedure

1. Allow temperatures of test trap and rig to warm up by opening V-1, V-2, V-3 and V-4. Normal steam pressure 100 psig, (338°F).
2. After temperatures have stabilized, blowdown air cylinder by closing V-2, V-3 and opening V-5 and A-1. Blowdown until an air temperature of 200°F is attained at T_2.
3. Close V-4 and V-5 and pressurize the air cylinder to 90 psig.
4. Open V-4 and V-2.
5. If using a recorder to measure temperature at T_1 start the recorder.
6. Shut V-1 and immediately open V-3. If using a timer, start the timer.
7. Stop the timer when the inlet temperature at T_1 returns to normal operating temperature.

FIGURE B.7
Steam trap air handling capability – test rig

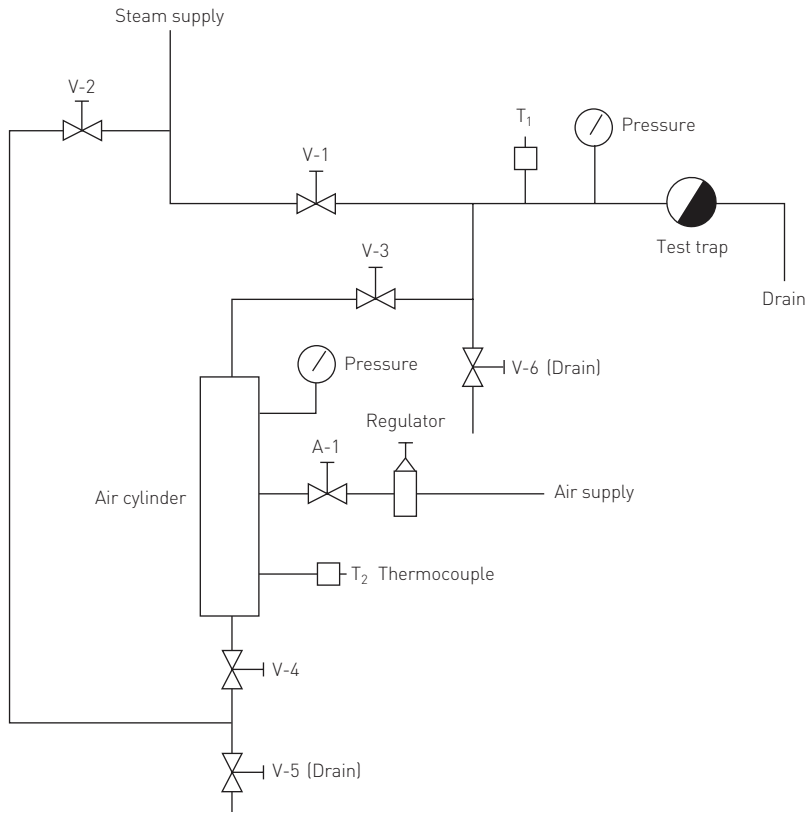

APPENDIX C

Air binding: the process of a steam trap closing due to the presence of air rather than steam. This slows down the discharge of condensate and the ability of a steam system to reach its desired temperature (reference Chapter 5).

Blow-down valve: a valve used when blowing pipeline dirt or scale from a strainer screen or boiler drum (reference Chapter 5, Figure 5.1).

British Thermal Unit (BTU): The quantity of heat required to raise one pound of water one (1) degree fahrenheit (reference Chapter 2).

Capacity: the maximum amount of condensate that can be discharged by a steam trap at specific conditions of temperature and pressure differential (between its inlet and outlet)-capacity is measured in pounds per hour (reference Chapter 4).

Condensate: the result of steam changing from vapor to a liquid.

Cycle: the opening and closing action of a steam trap that allows it to pass condensate and then stop the passage of steam.

Dirt pocket: a length of pipe in the discharge line of steam heated equipment that allows the collection (by gravity) of pipeline scale and dirt (reference Figure 5.1).

Discharge temperature: the temperature of condensate (measured at a steam trap's inlet) while it is being discharged. Sometimes referred to as the temperature at which a steam trap starts to open (reference Chapter 2 and Chapter 4).

Efficiency: see also ASME power test code ANSI PTC39.1.

Enthalpy: the energy content of a fluid, including both heat and mechanical energy, BTU/lb-see Sensible, latent heat, and total heat of steam.

Flash steam: steam that results when saturated water or condensate is discharged to a lower pressure. It is steam that could not exist at a higher pressure (reference Chapter 2).

Flash tank: a vessel or tank where flash steam is accumulated for subsequent use (reference Chapter 5, Figure 5.3).

Latent heat of vaporization: heat that produces a change of state without a change in temperature, such as changing water into steam-sometimes referred to simply as 'latent heat' (reference Chapter 2).

Modulate: the partial opening and closing of a steam trap, thereby regulating the discharge flow of condensate. Modulation is in contrast to a full open/full closed mode of operation.

psia: pounds per square inch absolute-a measure of pressure including atmospheric pressure (about 14.69 psi).

psig: pounds per square inch gage – a measure of pressure excluding atmospheric pressure (about 14.69 psi).

Safety load factor: a factor, by which the calculated condensate load is multiplied, to determine the capacity a trap should possess to properly serve its selected application. The safety load factor is used to accommodate system variables and uncertainties affecting the condensate flow rate (reference Chapter 4).

Sizing: the process of matching the condensate drainage requirements of an application to a steam trap having a suitable capacity (reference Chapter 4).

Saturated condensate: condensate that has a temperature equal to that of the steam with which it is in contact (reference Chapter 2).

Saturated steam: steam that has a temperature equal to that of the condensate with which it is in contact (reference Chapter 2).

Saturation curve: graphic representation of the boiling point of water at various pressures (the pressure and temperature at which saturated steam and condensate exist) (reference Chapter 2).

Saturation temperature: the temperature at which saturated steam and condensate exist (reference Chapter 2, Figure 2.3).

Sensible heat: heat that produces a temperature rise in a body (such as water) (reference Chapter 2).

Steam:
- **Dry:** steam having no water droplets suspended in it (reference Chapter 2).
- **Live:** 'live steam' is an expression commonly used to describe steam that is still able to do useful work-in contrast to flash steam at atmospheric pressure.
- **Wet:** steam having fine water droplets suspended in it, and as a result, having a lower heat content than dry steam (reference Chapter 2).
- **Total heat of:** the sum of BTUs per pound of both the sensible heat (of condensate) and the latent heat (of vaporization) (reference Chapter 2).

Steam binding: the process of steam keeping a steam trap closed and thereby preventing the discharge of condensate that has formed upstream of the trap. This condition results when the condensate discharge line to a steam trap is subjected to sufficient heating that the condensate in it is changed back into steam, thereby blocking the flow of condensate to the trap (reference Chapter 5).

Steam separator: a device that removes entrained water droplets from steam flow (reference Chapter 5).

Steam tables: tables that list the properties of steam and condensate at various pressures and temperatures (reference Chapter 2).

Steam tracing: the use of steam to: (1) heat or maintain the temperature of a process liquid in a pipeline, (2) prevent water lines and related equipment from winter freeze-ups, and (3) provide uniform temperature in and around instruments so as to help maintain their calibration (reference Appendix A-11).

Steam trap: a self-contained valve which automatically drains condensate and discharges air and non-condensible gases from a steam-containing pipe or vessel (reference Chapter 3).
- **Cool:** a steam trap that discharges condensate at temperatures significantly below saturation temperature is referred to as a 'cool trap' even though it may be at a temperature well above 212°F (reference Chapter 4).
- **Hot:** a steam trap that discharges condensate at temperatures up to 10 degrees below saturation temperature (reference Chapter 4).
- **Process:** a steam trap that discharges condensate from equipment used in the heating or production of some product as distinct from a 'protection service' application.
- **Protection:** a steam trap that discharges condensate from an application such as a steam main (to protect it from water hammer) or from a tracer application providing protection from freezing.

Steam trap standard: a preferred type of steam trap and piping configuration for removing condensate from each designated piece of equipment in a steam system.

Superheat: heat that is added to dry saturated steam.

Subcooling: the temperature difference between that of steam and the condensate being discharged by a steam trap. This subcooling or suppression will be at least 2 or 3 degrees and sometimes much more. Certain applications benefit from steam traps that discharge condensate with a small amount of subcooling, while others will benefit from a large amount of subcooling.

Suppression: (see 'Subcooling').

Water hammer: the shock created when accumulated condensate is swept down a pipeline at high velocities and is slammed into valves, elbows, steam traps, or other fittings.

APPENDIX D – CONTENTS

CONVERSION FACTORS

Length
1 in = 25.4 mm
1 mm = .03937 in
1 ft = 30.48 em
1 m = 3.28083 ft
1 micron = .001 mm

Area
1 in^2 = 6.4516 cm^2
1 ft^2 = 929.03 cm^2
1 cm^2 = 0.155 in^2
1 cm^2 = 0.0010764 ft^2

Volume
1 in^3 = 16.387 cm^3
1 ft^3 = 1728 in^3
1 ft^3 = 7.4805 U.S. gal
1 ft^3 = 6.229 British gal
1 ft^3 = 28.317 liters
1 U.S. gal = 0.1337 ft^3
1 U.S. gal = 231 in^3
1 U.S. gal = 3.785 liters
1 British gal = 1.20094 U.S. gal
1 British gal = 277.3 in^3
1 British gal = 4.546 liters
1 liter = 61.023 in^3
1 liter = 0.03531 ft^3
1 liter = 0.2642 U.S. gal

Velocity
1 ft per sec = 30.48 cm per sec
1 cm per sec = .032808 ft per sec

Weight
1 ounce av = 28.35 g
1 lb av = 453.59 g
1 gram = 0.03527 oz av
1 kg = 2.205 lb av
1 ft^3 of water = 62.425 lb
1 U.S. gal of water = 8.33 lb
1 in^3 of water = 0.0361 lb
1 British gal of water = 10.04 lb
1 ft^3 of air at 60°F and 1 atm = 0.0764 lb

Flow
1 ft^3 per sec = 448.83 gal per min
1 ft^3 per sec = 1699.3 liters per min
1 U.S. gal per min = 0.002228 ft^3 per sec
1 U.S. gal per min = 0.06308 liters per sec
1 cm^3 per sec = 0.0021186 ft^3 per min

Density
1 lb per ft^3 = 16.018 kg per m^3
1 lb per ft^3 = .0005787 lb per in^3
1 kg per m^3 = 0.06243 lb per ft^3
1 g per cm^3 = 0.03613 lb per in^3

Energy
1 BTU = 777.97 ft·lb
1 erg = 9.4805 x 10^{-11} BTU
1 erg = 7.3756 x 10^{-6} ft·lb
1 kilowatt hour = 2.655 x 10^{6} ft·lb
1 kilowatt hour = 1.3410 hp hr
1 kg calorie = 3.968 BTU

Pressure
1 in of water = 0.03613 lb per in^2
1 in of water = 0.07355 in of Hg
1 ft of water = 0.4335 lb per in^2
1 ft of water = 0.88265 in of Hg
1 in of mercury = 0.49116 lb per in^2
1 in of mercury = 13.596 in of water
1 in of mercury = 1.13299 ft of water
1 atmosphere = 14.696 lb per in^2
1 atmosphere = 760 mm of Hg
1 atmosphere = 29.921 in of Hg
1 atmosphere = 33.899 ft of water
1 lb per in^2 = 27.70 in of water
1 lb per in^2 = 2.036 in of Hg
1 lb per in^2 = .0703066 kg per cm^2
1 kg per cm^2 = 14.223 lb per in^2
1 dyne per cm^2 = .0000145 lb per in^2
1 micron = .00001943 lb per in^2

Power
1 horsepower = 33,000 ft·lb per min
1 horsepower = 550 ft·lb per sec
1 horsepower = 2,546.5 BTU per hr
1 horsepower = 745.7 watts
1 watt = 0.00134 horsepower
1 watt = 44.26 ft·lb per min

Viscosity
1 Centipoise = .000672 lb per ft sec
1 Centistoke = .00001076 ft^2 per sec

Temperature
Temperature Fahrenheit (F) = 9/5 Celsius (C) + 32 = 9/4 R + 32
Temperature Celsius (C) = 5/9 Fahrenheit (F) – 32 = 5/4 R
Temperature Reaumur (R) = 4/9 Fahrenheit (F) – 32 = 4/5 C
Absolute temperature Celsius or Kelvin (K) = Degrees C + 273.16
Absolute temperature Fahrenheit or Rankine (R) = Degrees F + 459.69

Heat transfer
1 BTU per ft^2 = .2712 g cal per cm^2
1 g calorie per cm^2 = 3.687 BTU per ft^2
1 BTU per hr per ft^2 per °F = 4.88 kg cal per hr per m^2 per °C
1 kg cal per hr per m^2 per °C = .205 BTU per hr per ft^2 per °F
1 Boiler horsepower = 33479 BTU per hr

TEMPERATURE CONVERSION TABLES

Fahrenheit and Celsius (Centigrade)														
C	*	F	C	*	F	C	*	F	C	*	F	C	*	F
-273.15	-459.67	-	-17.2	1	33.8	10.6	51	123.8	43	110	230	266	510	950
-268	-450	-	-16.7	2	35.6	11.1	52	125.6	49	120	248	271	520	968
-262	-440	-	-16.1	3	37.4	11.7	53	127.4	54	130	266	277	530	986
-257	430	-	-15.6	4	39.2	12.2	54	129.2	60	140	284	282	540	1004
-251	-420	-	-15.0	5	41.0	12.8	55	131.0	66	150	302	288	550	1022
-246	-410	-	-14.4	6	42.8	13.3	56	112.8	71	160	320	293	560	1040
-240	-400	-	-13.9	7	44.6	13.9	57	134.6	77	170	338	299	570	1058
-234	-390	-	-13.3	8	46.4	14.4	58	136.4	82	180	356	304	580	1076
-229	-380	-	-12.8	9	48.2	15.0	59	138.2	88	190	374	310	590	1094
-223	-370	-	-12.2	10	50.0	15.6	60	140.0	93	200	392	316	600	1112
-218	-360	-	-11.7	11	51.8	16.1	61	141.8	99	210	410	321	610	1130
-212	-350	-	-11.1	12	53.6	16.7	62	143.6	-	-	-	327	620	1148
-207	-340	-	-10.6	13	55.4	17.2	63	145.4	-	-	-	332	630	1166
-201	-330	-	-10.0	14	57.2	17.8	64	147.2	-	-	-	338	640	1184
-196	-320	-	-9.4	15	59.0	18.3	65	149.0	-	-	-	343	650	1202
-190	-310	-	-8.9	16	60.8	18.9	66	150.8	100	212	413	349	660	1220
-184	-300	-	-8.3	17	62.6	19.4	67	152.6	-	-	-	354	670	1238
-179	-290	-	-7.8	18	64.4	20.0	68	154.4	-	-	-	360	680	1256
-173	-280	-	-7.2	19	66.2	20.6	69	156.2	-	-	-	366	690	1274
-169	-273	-459.4	-6.7	20	68.0	21.1	70	158.0	-	-	-	371	700	1292
-168	-270	-454	-6.1	21	69.8	21.7	71	159.8	-	-	-	377	710	1310
-162	-260	-436	-5.6	22	71.6	22.2	72	161.6	104	220	428	382	720	1328
-157	-250	-418	-5.0	23	73.4	22.8	73	163.4	110	230	446	388	730	1346
-151	-240	-400	-4.4	24	72.5	23.3	74	165.2	116	240	464	393	740	1364
-146	-230	-382	-3.9	25	77.0	23.9	75	167.0	121	250	482	399	750	1382
-140	-220	-364	-3.3	26	78.8	24.4	76	168.8	127	260	500	404	760	1400
-134	-210	-346	-2.8	27	80.6	25.0	77	170.6	132	270	518	410	770	1418
-129	-200	-328	-2.2	28	82.4	25.6	78	172.4	138	280	536	416	780	1436
-123	-190	-310	-1.7	29	84.2	26.1	79	174.9	143	290	554	421	790	1454
-118	-180	-292	-1.1	30	86.0	26.7	80	176.0	149	300	572	427	800	1472
-112	-170	-274	-0.6	31	87.8	27.2	81	177.8	154	310	590	432	810	1490
-107	-160	-256	0.0	31	89.6	27.8	82	179.6	160	320	608	438	820	1508
-101	-150	-238	0.6	33	91.4	28.3	83	181.4	166	330	626	443	830	1526
95.6	-140	-220	1.1	34	93.2	28.9	84	183.2	171	340	644	449	840	1544
-90.0	-130	-202	1.7	35	95.0	29.4	85	185.0	177	350	662	454	850	1562
-84.4	-120	-184	2.2	36	96.8	30.0	86	186.8	182	360	680	460	860	1580
-78.9	-110	-166	2.8	37	98.6	30.6	87	188.6	188	370	698	466	870	1598
-73.3	-100	-148	3.3	38	100.4	31.1	88	190.4	193	380	716	471	880	1616
-67.8	-90	-130	3.9	39	102.2	31.7	89	192.2	199	390	734	477	890	1634
-62.2	-80	-112	4.4	40	104.0	32.2	90	194.0	204	400	752	482	900	1652
-56.7	-70	-94	5.0	41	105.8	32.8	91	195.8	210	410	770	488	910	1670
-51.1	-60	-76	5.6	42	107.6	33.3	92	197.6	216	420	788	493	920	1688
-45.6	-50	-58	6.1	43	109.4	33.9	93	199.4	221	430	806	499	930	1706
-40.0	-40	-40	6.7	44	111.2	34.4	94	201.2	227	440	824	504	940	1724
-34.4	-30	-22	7.2	45	113.0	35.0	95	203.0	232	450	842	510	950	1742
-28.9	-20	-4	7.8	46	114.8	35.6	96	204.8	238	460	860	516	960	1760
-23.3	-10	14	8.3	47	116.6	36.1	97	206.6	243	470	878	521	970	1778
-17.8	0	32	8.9	48	118.4	36.7	98	208.4	249	480	896	527	980	1796
			9.4	49	120.2	37.2	99	210.2	254	490	914	532	990	1814
			10.0	50	122.0	37.8	100	212.0	260	500	932	538	1000	1832

* In the center column, find the temperature to be converted. The equivalent temperature is in the left column, if converting to Celsius, and in the right column, if converting to Fahrenheit.

INTERPOLATION VALUES

C	*	F	C	*	F
0.56	1	1.8	3.33	6	10.8
1.11	2	3.6	3.89	7	12.6
1.67	3	5.4	4.44	8	14.4
2.22	4	7.2	5.00	9	16.2
2.78	5	9.0	5.56	10	18.0

TEMPERATURE CONVERSION TABLES (CONTINUED)

Fahrenheit and Celsius (Centigrade)											
C	*	F	C	*	F	C	*	F	C	*	F
543	1010	1850	821	1510	2750	1099	2010	3650	1377	2510	4550
549	1020	1868	827	1520	2768	1104	2020	3668	1382	2520	4568
554	1030	1886	832	1530	2786	1110	2030	3686	1388	2530	4586
560	1040	1904	838	1540	2804	1116	2040	3704	1393	2540	4604
566	1050	1922	843	1550	2822	1121	2050	3722	1399	2550	4622
571	1060	1940	849	1560	2840	1127	2060	3740	1404	2560	4640
577	1070	1958	854	1570	2858	1132	2070	3758	1410	2570	4658
582	1080	1976	860	1580	2876	1138	2080	3776	1416	2580	4676
588	1090	1994	866	1590	2894	1143	2090	3794	1421	2590	4694
593	1100	2012	871	1600	2912	1149	2100	3812	1427	2600	4712
599	1110	2030	877	1610	2930	1154	2110	3830	1432	2610	4730
604	1120	2048	882	1620	2948	1160	2120	3848	1438	2620	4748
610	1130	2066	888	1630	2966	1166	2130	3866	1443	2630	4766
616	1140	2084	893	1640	2984	1171	2140	3884	1449	2640	4784
621	1150	2102	899	1650	3002	1177	2150	3902	1454	2650	4802
627	1160	2120	904	1660	3020	1182	2160	3920	1460	2660	4820
632	1170	2138	910	1670	3038	1188	2170	3938	1466	2670	4838
638	1180	2156	916	1680	3056	1193	2180	3956	1471	2680	4856
643	1190	2174	921	1690	3074	1199	2190	3974	1477	2690	4874
649	1200	2192	927	1700	3092	1204	2200	3992	1482	2700	4892
654	1210	2210	932	1710	3110	1210	2210	4010	1488	2710	4910
660	1220	2228	938	1720	3128	1216	2220	4028	1493	2720	4928
666	1230	2246	943	1730	3146	1221	2230	4046	1499	2730	4946
671	1240	2264	949	1740	3164	1227	2240	4064	1504	2740	4964
677	1250	2282	954	1750	3182	1232	2250	4082	1510	2750	4982
682	1260	2300	960	1760	3200	1238	2260	4100	1516	2760	5000
688	1270	2318	966	1770	3218	1243	2270	4118	1521	2770	5018
693	1280	2336	971	1780	3236	1249	2280	4136	1527	2780	5036
699	1290	2354	977	1790	3254	1254	2290	4154	1532	2790	5054
704	1300	2372	982	1800	3272	1260	2300	4172	1538	2800	5072
710	1310	2390	988	1810	3290	1266	2310	4190	1543	2810	5090
716	1320	2408	993	1820	3308	1271	2320	4208	1549	2820	5108
721	1330	2426	999	1830	3326	1277	2330	4226	1554	2830	5126
727	1340	2444	1004	1840	3344	1282	2340	4244	1560	2840	5144
732	1350	2462	1010	1850	3362	1288	2350	4262	1566	2850	5162
738	1360	2480	1016	1860	3380	1293	2360	4280	1571	2860	5180
743	1370	2498	1021	1870	3398	1299	2370	4298	1577	2870	5198
749	1380	2516	1027	1880	3416	1304	2380	4316	1582	2880	5216
754	1390	2534	1032	1890	3434	1310	2390	4334	1588	2890	5234
760	1400	2552	1038	1900	3452	1316	2400	4352	1593	2900	5252
766	1410	2570	1043	1910	3470	1321	2410	4370	1599	2910	5270
771	1420	2588	1049	1920	3488	1327	2420	4388	1604	2920	5288
777	1430	2606	1054	1930	3506	1332	2430	4406	1610	2930	5306
782	1440	2624	1060	1940	3524	1338	2440	4424	1616	2940	5324
788	1450	2642	1066	1950	3542	1343	2450	4442	1621	2950	5342
793	1460	2660	1071	1960	3560	1349	2460	4460	1627	2960	5360
799	1470	2678	1077	1970	3578	1354	2470	4478	1632	2970	5378
804	1480	2696	1082	1980	3596	1360	2480	4496	1638	2980	5396
810	1490	2714	1088	1990	3614	1366	2490	4514	1643	2990	5414
816	1500	2732	1093	2000	3632	1371	2500	4532	1649	3000	5432

TEMPERATURE CONVERSION FORMULAS

Degrees Celsius (formerly Centigrade °C)	Degrees Fahrenheit - ° F	Degrees Reaumur - °R
°C + 273.15 = °K Kelvin	°F + 459.67 = °Rankine	°R x % = °C Celsius
(°C x %) + 32 = °F Fahrenheit	(°F – 32) x % = °C Celsius	(°R x %) + = °F Fahrenheit
°C x o/s = °R Reaumur	(°F – 32) x % = °R Reaumur	

STEAM TABLES

Steam pressure psig	Steam temperature °F	Heat BTU/lb Sensible	Latent	Total heat of steam	Specific volume ft^3·lb Saturated steam
28*	101	60	1037	1105	339.0
26*	126	93	1023	1116	177.0
24*	141	109	1014	1122	121.0
22*	152	120	1007	1127	92.0
20*	162	130	1001	1131	75.0
18*	169	137	997	1134	63.0
16*	176	144	993	1137	55.0
14*	182	150	989	1139	48.0
12*	187	155	986	1141	43.0
10*	192	160	983	1143	39.0
8*	197	165	980	1145	36.0
6*	201	169	977	1146	33.0
4*	205	173	975	1148	31.0
2*	209	177	972	1149	29.0
0*	212	180	970	1150	27.0
1	216	183	968	1151	25.0
2	219	187	965	1152	24.0
3	222	190	964	1154	22.5
4	224	193	962	1155	21.0
5	227	195	961	1156	20.0
6	230	198	959	1157	19.5
7	232	201	957	1158	18.5
8	235	203	956	1159	18.0
9	237	206	954	1160	17.0
10	240	208	952	1160	16.5
15	250	218	945	1163	14.0
20	259	227	940	1167	12.0
25	267	236	934	1170	10.5
30	274	243	929	1172	9.5
35	281	250	924	1174	8.5
40	287	256	920	1176	8.0
45	292	262	915	1177	7.0
50	298	267	912	1179	6.7
55	303	272	908	1180	6.2
60	307	277	905	1182	5.8
65	312	282	901	1183	5.5
70	316	286	898	1184	5.2
75	320	290	895	1185	4.9
80	324	294	892	1186	4.7
85	328	298	889	1187	4.4
90	331	302	886	1188	4.2
95	335	306	883	1189	4.0
100	338	309	881	1190	3.9
110	344	316	876	1192	3.6
120	350	322	871	1193	3.3
125	353	325	868	1193	3.2
130	356	328	866	1194	3.1
140	361	334	861	1195	2.9
150	366	339	857	1196	2.7
160	371	344	853	1197	2.6
170	375	348	849	1197	2.5
180	380	353	845	1198	2.3
190	384	358	841	1199	2.2

* Vacuum in Mercury

STEAM TABLES (CONTINUED)

Steam pressure psig	Steam temperature °F	Heat BTU/lb Sensible	Heat BTU/lb Latent	Heat BTU/lb Total heat of steam	Specific volume ft³·lb Saturated steam
200	388	362	837	1199	2.10
220	395	370	830	1200	2.00
240	403	378	823	1201	1.80
250	406	381	820	1201	1.75
260	409	385	817	1202	1.70
280	416	392	811	1203	1.60
300	422	399	805	1204	1.50
350	436	414	790	1204	1.30
400	448	428	776	1204	1.10
450	460	441	764	1205	1.00
500	470	453	751	1204	0.90
600	489	475	728	1203	0.75
750	513	503	697	1200	0.45
1100	558	560	629	1189	0.39
1450	593	607	565	1172	0.29
1800	622	650	501	1151	0.22
2200	650	697	424	1121	0.16
2600	675	746	334	1080	0.12
3000	696	805	211	1016	0.08
3193	705	906	0	906	0.05

To facilitate steam trap calculations, values are rounded to the values shown.

SUPERHEATED STEAM

Steam pressure psig	Saturated steam Temperature °F	Saturated steam Total heat of saturated steam BTU/lb	Total temperature, °F 400	600	800	1000
			Total heat of superheated steam BTU/lb			
200	388	1199	1207	1322	1425	1529
400	448	1204	-	1306	1416	1523
600	489	1203	-	1289	1408	1517
1100	558	1189	-	1235	1384	1502
2200	650	1121	-	-	1323	1467
3193	705	906	-	-	1250	1432

To facilitate steam trap calculations, values are rounded to the values shown.

SENSIBLE HEAT OF LIQUID (BTU/lb)

Temperature °F	Sensible heat (BTU/lb)	Temperature °F	Sensible heat (BTU/lb)
32	0.00	68	36.04
34	2.02	70	38.04
36	4.03	72	40.04
38	6.04	74	42.03
40	8.05	76	44.03
42	10.05	78	46.02
44	12.06	80	48.02
46	14.06	82	50.01
48	16.07	84	52.01
50	18.07	86	54.00
52	20.07	88	56.00
54	22.07	90	57.99
56	24.06	92	59.99
58	26.06	94	61.98
60	28.06	96	63.98
62	30.05	98	65.97
64	32.05	100	67.97
66	34.05		

PROPERTIES OF PIPE - SCHEDULE 40 PIPE DIMENSIONS

Size	Diameters, in		Nom.	Transverse areas, in			Length of pipe per ft² of		ft³ per ft of	Wt per ft	No. thrds per
in	External	Internal	thick., in	External	Internal	Metal	Ext. surface feet	Int. surface feet	pipe	lb	in of screw
⅛	.405	.269	.068	.129	.057	.072	9.431	14.199	.00039	.244	27
¼	.540	.364	.088	.229	.104	.125	7.073	10.493	.00072	.424	18
⅜	.675	.493	.091	.358	.191	.167	5.658	7.747	.00133	.567	18
½	.840	.622	.109	.554	.304	.250	4.547	6.141	.00211	.850	14
¾	1.050	.824	.113	.866	.533	.333	3.637	4.635	.00370	1.130	14
1	1.315	1.049	.133	1.358	.864	.494	2.904	3.641	.00600	1.678	11½
1¼	1.660	1.380	.140	2.164	1.495	.669	2.301	2.767	.01039	2.272	11½
1½	1.900	1.610	.145	2.835	2.036	.799	2.010	2.372	.01414	2.717	11½
2	2.375	2.067	.154	4.430	3.355	1.075	1.608	1.847	.02330	3.652	11½
2½	2.875	2.469	.203	6.492	4.788	1.704	1.328	1.547	.03325	5.793	8
3	3.500	3.068	.216	9.621	7.393	2.228	1.091	1.245	.05134	7.575	8
3½	4.000	3.548	.226	12.560	9.886	2.680	.954	1.076	.06866	9.109	8
4	4.500	4.026	.237	15.900	12.730	3.174	.848	.948	.08840	10.790	8
5	5.563	5.047	.258	24.300	20.000	4.300	.686	.756	.13890	14.610	8
6	6.625	6.065	.280	34.470	28.890	5.561	.576	.629	.20060	18.970	8
8	8.625	7.981	.322	58.420	50.020	8.399	.442	.478	.35520	28.550	8
10	10.750	10.020	.365	90.760	78.850	11.900	.355	.381	.54760	40.480	8
12	12.750	11.938	.406	127.640	111.900	15.740	.299	.318	.77630	53.600	-
14	14.000	13.125	.437	153.940	135.300	18.640	.272	.280	.93540	63.000	-
16	16.000	15.000	.500	201.050	176.700	24.350	.238	.254	1.22300	78.000	-
18	18.000	16.874	.563	254.850	224.000	30.850	.212	.226	1.55500	105.000	-
20	20.000	18.814	.593	314.150	278.000	36.150	.191	.203	1.92600	123.000	-
24	24.000	22.626	.687	452.400	402.100	50.300	.159	.169	2.79300	171.000	-

PROPERTIES OF PIPE - SCHEDULE 80 PIPE DIMENSIONS

Size	Diameters, in		Nom.	Transverse areas, in			Length of pipe per ft² of		ft³ per ft of	Wt per ft	No. thrds per
in	External	Internal	thick., in	External	Internal	Metal	Ext. surface feet	Int. surface feet	pipe	lb	in of screw
⅛	.405	.215	.095	.129	.036	.093	9.431	17.750	.00025	.314	27
¼	.540	.302	.119	.229	.072	.157	7.073	12.650	.00050	.535	18
⅜	.675	.423	.126	.358	.141	.217	5.658	9.030	.00098	.738	18
½	.840	.546	.147	.554	.234	.320	4.547	7.000	.00163	1.000	14
¾	1.050	.742	.154	.866	.433	.433	3.637	5.150	.00300	1.470	14
1	1.315	.957	.179	1.358	.719	.639	2.904	3.995	.00500	2.170	11½
1¼	1.660	1.278	.191	2.164	1.283	.881	2.301	2.990	.00891	3.000	11½
1½	1.900	1.500	.200	2.835	1.767	1.068	2.010	2.542	.01227	3.650	11½
2	2.375	1.939	.218	4.430	2.953	1.477	1.608	1.970	.02051	5.020	11½
2½	2.875	2.323	.276	6.492	4.238	2.254	1.328	1.645	.02943	7.660	8
3	3.500	2.900	.300	9.621	6.605	3.016	1.091	1.317	.04587	10.300	8
3½	4.000	3.364	.318	12.560	8.888	3.678	.954	1.135	.06172	12.500	8
4	4.500	3.826	.337	15.900	11.497	4.407	.848	.995	.07980	14.900	8
5	5.563	4.813	.375	24.300	18.194	6.112	.686	.792	.12630	20.800	8
6	6.625	5.761	.432	34.470	26.067	8.300	.576	.673	.18100	28.600	8
8	8.625	7.625	.500	58.420	45.663	12.760	.442	.501	.31710	43.400	8
10	10.750	9.564	.593	90.760	71.840	18.920	.355	.400	.49890	64.400	8
12	12.750	11.376	.687	127.640	101.640	26.000	.299	.336	.70580	88.600	-
14	14.000	12.500	.750	153.940	122.720	31.220	.272	.306	.85220	107.000	-
16	16.000	14.314	.843	201.050	160.920	40.130	.238	.263	1.11700	137.000	-
18	18.000	16.126	.937	254.850	204.240	50.610	.212	.237	1.41600	171.000	-
20	20.000	17.938	1.031	314.150	252.720	61.430	.191	.208	1.75500	209.000	-
24	24.000	21.564	1.218	452.400	365.220	87.180	.159	.177	2.53600	297.000	-

OVERALL HEAT TRANSFER COEFFICIENTS

The 'U' value, or overall heat transfer coefficient, represents the total BTU transmitted in one hour for each square foot of heat transfer surface at a temperature difference of one degree Fahrenheit (BTU/hr ft^2 °F). 'U' values are the arithmetical result of experiments, research, tests, practice and operations in controlled installations. Most 'U' values are given for bare metal heat transfer surface in intimate contact with the product. In general, the 'U' value is relatively high when a) the temperature of operation is high, b) there is mechanical circulation, c) surfaces are smooth and clean, and d) the viscosity of the fluid is low. In the table below, two 'U' values, the low and high values normally experienced in general practice, are given for several of the more common heat transfer media/product applications.

OVERALL HEAT TRANSFER COEFFICIENTS

Service	Saturated steam			Water		
Alphabetical listing	Free convection	Forced convection	Clamp on*	Free convection	Forced convection	Clamp on*
Air	1-2	6-8	2	2-3	5-8	2
Anodize solution	100-200	150-300	25-30	50-90	100-180	18-20
Asphalt	18-25	40-60	7-10	5-9	10-15	3-5
Brine, salt	100-175	150-275	25-30	60-100	100-150	18-20
Fatty acid (tallow)	50-100	125-250	12-20	15-30	30-55	6-10
Molasses	20-40	60-90	10-15	6-10	10-15	5-8
Oil, heavy	15-40	50-90	7-10	6-10	12-25	3-5
Oil, medium	30-50	50-100	9-12	6-10	12-25	5-7
Paraffin wax	25-45	40-60	10-15	6-10	30-50	5-8
Phosphatizing solution	100-200	150-300	25-30	50-90	100-180	18-20
Plating solution	100-225	160-300	25-30	50-100	100-200	18-20
Slurry, light	75-150	140-280	20-25	30-90	60-160	16-18
Syrup	20-40	70-90	10-15	6-10	10-20	5-8
Sugar solution	40-80	100-200	12-20	15-30	30-60	6-10
Sulphur, molten	25-40	40-50	10-15	6-10	10-15	5-8
Tar	15-25	40-60	7-10	5-9	10-15	3-5
Water	125-225	150-300	25-30	70-100	100-200	18-20

* All values except as noted by '*' are for immersion or integral installations.

Selection of the 'U' value should be on the conservative side and depends on the accuracy of data describing the actual operating conditions and heat transfer characteristics of the product. 'U' value estimates should be influenced by the following considerations: is the fluid thick or viscous? Will it precipitate or cling to the heat transfer surface? What degree of fouling can be expected during the operating cycle?

PHYSICAL PROPERTIES OF GASES

Material	Density	Spec. heat at 60°F (BTU/lb °F)
Air	0.075	0.24
Ammonia	0.048	0.52
Chlorine	0.020	0.12
Nitrogen	0.073	0.25
Oxygen	0.083	0.23
Sulphur dioxide	0.183	0.16
Water, vapor (STM)	-	0.45

PHYSICAL PROPERTIES OF LIQUIDS AND SOLIDS

Material	State	Spec. grav. at 60-70°F	Spec. heat at 60°F (BTU/lb °F)
Acetic acid – 100%	L	1.05	0.48
Alcohol – ethyl 95%	L	0.81	0.60
Aluminum	S	2.64	0.23
Asphalt	S	1.30	0.22-0.40
Benzene	L	0.84	0.41
Brine (CaCl – 25%)	L	1.24	0.69
Brine (NaCl – 25%)	L	1.19	0.79
Chocolate mixture	L	1.15	0.39
Cotton seed oil	L	0.95	0.47
Coal tars	S	1.20	0.35 at 105°F
Dowtherm a	L	1.00	0.63
Ethylene glycol	L	1.11	0.58
Fuel oil #1 (Kerosene)	L	0.81	0.47
Fuel oil #3 (PS 200)	L	0.89	0.43
Fuel oil #6 (Bunker C)	L	0.96	0.40
Fatty acid	L	0.86	0.65
Gasoline	L	0.60	0.53
Glue (2 Pts H20,1 Pt dry glue)	L	1.09	0.89
Glycerin	L	1.26	0.58
Glass, pyrex	S	2.25	0.20
Hydrochloric acid – 10%	L	1.05	0.75
Ice	S	0.90	0.50
Ice cream	S	-	0.70
Kerosene	L	0.80	0.47
Lard	S	0.92	0.64
Lead	S	11.36	0.031
Leather	S	0.86-1.02	0.36
Linseed oil	L	0.93	0.44
Magnesia 10%	S	0.21	0.27
Meat, fresh, avg.	S	-	0.70
Machine oil	L	0.93	0.40
Nickel, rolled	S	8.66	-
Nitric acid – 95%	L	1.50	0.50
Nitric acid – 20%	L	1.12	0.81
Olive oil	L	0.93	0.47
Paper	S	0.93	0.45
Paraffin, solid	S	0.86-0.91	0.62
Paraffin, melted	L	0.90	0.69
Petroleum	L	0.87	0.51
Phosphoric acid – 20%	L	1.11	0.85
Rubber goods	S	1.50	1.0-2.0
Sodium hydroxide – 50% caustic soda	L	1.53	0.78
Starch	S	1.53	-
Steel, mild at 70°F	S	7.90	0.11
Steel, mild at 160°F	S	8.00	0.16
Steel, stainless (300 Series)	S	8.00	0.12
Sucrose – 60% sugar syrup	L	1.29	0.74
Sucrose – 40% sugar syrup	L	1.18	0.66
Sugar, cane and beet	S	1.66	0.30
Sulphuric acid – 98%	L	1.84	0.35
Sulphuric acid – 60%	L	1.50	0.52
Sulphuric acid – 10%	L	1.14	0.84
Trichloroethylene	L	1.62	0.22
Turpentine, spirits of	L	0.86	0.42
Vegetables, fresh, avg.	S	-	0.92
Water, pure, 32°F	L	1.00	1.00
Water, sea	L	1.03	0.94
Wines, table, avg.	L	1.03	0.90
Wool	S	1.32	0.33
Zinc	S	7.04	0.10

SPECIFIC HEATS OF FOODSTUFFS

Product	Specific heat BTU per lb per °F		Product	Specific heat BTU per lb per °F		Product	Specific heat BTU per lb per °F	
	Above freezing	Below freezing		Above freezing	Below freezing		Above freezing	Below freezing
Apples	.87	.42	Chicken, capons	.88	.44	Halibut	.80	.40
Apricots, fresh	.88	.43	Clams. meat only	.84	.41	Herring, smoked	.71	.37
Artichokes	.87	.42	Coconut, meat and milk	.68	.36	Horseradish, fresh	.79	.40
Asparagus	.94	.45	Coconut. milk only	.95	.45	Horseradish, prepared	.88	.43
Avocados	.72	.37	Codfish	.86	.42	Ice cream	.74	.45
Bananas	.80	.40	Cod Roe	.76	.39	Kale	.89	.43
Barracuda	.80	.40	Cowpeas, fresh	.73	.39	Kidneys	.81	.40
Bass	.82	.41	Cowpeas, dry	.28	.22	Kidney beans, dried	.28	.23
Beef, carcass	.68	.48	Crabs	.84	.41	Kohlrabi	.92	.44
Beef, flank	.56	.32	Crab apples	.85	.41	Kumquats	.85	.41
Beef. loin	.66	.35	Cranberries	.90	.43	Lamb, carcass	.73	.38
Beef, rib	.67	.36	Cream	.90	.38	Lamb, leg	.71	.37
Beef, round	.74	.38	Cucumber	.97	.45	Lamb, rib cut	.61	.34
Beef, rump	.62	.34	Currants	.97	.45	Lamb, shoulder	.67	.35
Beef, corned	.63	.34	Dandelion greens	.88	.43	Lard	.54	.31
Beer	.89	-	Dates	.20	.007	Leeks	.91	.44
Beets	.90	.43	Eels	.77	.39	Lemons	.91	.44
Blackberries	.87	.42	Eggs	.76	.40	Lemon juice	.92	.44
Blueberries	.87	.42	Eggplant	.94	.45	Lettuce	.96	.45
Brains	.84	.41	Endive	.95	.45	Lima beans	.73	.38
Broccoli	.92	.44	Figs, fresh	.82	.41	Limes	.89	.43
Brussels sprouts	.88	.43	Figs. dried	.39	.26	Lime juice	.93	.44
Butter	.65	.34	Figs, candied	.37	.26	Lobsters	.82	.41
Butterfish	.77	.39	Flounders	.86	.42	Loganberries	.86	.42
Cabbage	.94	.45	Flour	.38	.28	Loganberry juice	.91	.44
Candy	.93	-	Frog legs	.88	.44	Milk, cow	.94	.47
Carp	.82	.41	Garlic	.79	.40	Mushrooms, fresh	.93	.44
Carrots	.91	.44	Gizzards	.78	.39	Mushrooms, dried	.30	.23
Cauliflower	.93	.44	Goose	.61	.34	Muskmelons	.94	.45
Celery	.94	.45	Gooseberry	.86	.42	Nectarines	.86	.42
Chard	.93	.44	Granadilla	.84	.41	Nuts	.28	.24
Cheese	.65	-	Grapefruit	.91	.44	Olives, green	.80	.40
Cherries. sour	.88	.43	Grapes	.86	.42	Onions	.90	.43
Chicken, squab	.80	.40	Grape juice	.82	.41	Onions, welsh	.91	.44
Chicken, broilers	.77	.39	Guavas	.86	.42	Oranges, fresh	.90	.43
Chicken, fryers	.74	.38	Guinea hen	.75	.38	Orange juice	.89	.43
Chicken. hens	.65	.35	Haddock	.85	.42	Oysters	.84	.41

SPECIFIC HEATS OF FOODSTUFFS (CONTINUED)

Product	Specific heat BTU per lb per °F		Product	Specific heat BTU per lb per °F		Product	Specific heat BTU per lb per °F	
	Above freezing	Below freezing		Above freezing	Below freezing		Above freezing	Below freezing
Peaches, Georgia	.87	.42	Pork, ham	.62	.34	Strawberries	.95	.45
Peaches, N. Carolina	.89	.43	Pork, loin	.66	.35	String beans	.91	.44
Peaches, Maryland	.90	.43	Pork shoulder	.59	.33	Sturgeon, raw	.83	.41
Peaches, New Jersey	.91	.44	Pork, spareribs	.62	.34	Sugar apple, fresh	.79	.39
Peach juice, fresh	.89	.43	Pork, smoked ham	.65	.35	Sweet potatoes	.75	.38
Pears, Bartlett	.89	.43	Pork, salted	.31	.24	Swordfish	.80	.40
Pears, Beurre Bosc	.85	.41	Potatoes	.82	.41	Terrapin	.80	.40
Pears, dried	.39	.26	Prickly pears	.91	.43	Tomatoes	.95	.45
Peas, young	.85	.41	Prunes	.81	.40	Tomato juice	.95	.45
Peas, medium	.81	.40	Pumpkin	.92	.44	Tongue, beef	.74	.38
Peas, old	.88	.43	Quinces	.88	.43	Tongue, calf	.79	.40
Peas, split	.28	.23	Rabbit	.76	.39	Tongue, lamb	.76	.38
Peppers, ripe	.91	.44	Radishes	.95	.45	Tongue, pork	.74	.39
Perch	.82	.41	Raisins	.39	.26	Tripe, beef	.83	.41
Persimmons	.72	.37	Raspberries, black	.85	.41	Tripe, pickled	.89	.43
Pheasant	.75	.38	Raspberries, red	.89	.43	Trout	.82	.41
Pickerel	.84	.41	Raspberry juice, black	.91	.44	Tuna	.76	.39
Pickles, sweet	.82	.41	Reindeer	.73	.37	Turkey	.67	.35
Pickles, sour and dill	.96	.45	Rhubarb	.96	.45	Turnips	.93	.44
Pickles, sweet mixed	.78	.29	Rutabagas	.91	.44	Turtle	.84	.41
Pickles, sour mixed	.95	.45	Salmon	.71	.37	Veal, flank	.65	.35
Pig's feet, pickled	.50	.31	Sapote	.73	.37	Veal, loin	.75	.38
Pike	.84	.41	Sauerkraut	.93	.44	Veal, rib	.73	.37
Pineapple, fresh	.88	.43	Sausage, beef and pork	.56	.32	Veal, shank	.77	.39
Pineapple, sliced	.82	.41	Sausage, bockwurst	.71	.37	Veal, quarter	.74	.38
Pineapple juice	.90	.43	Sausage, bologna	.71	.37	Venison	.78	.39
Plums	.89	.43	Sausage, Frankfurt	.69	.36	Watercress	.95	.45
Pomegranate	.85	.41	Sausage, salami	.45	.28	Watermelons	.94	.45
Pompano	.77	.39	Sardines	.77	.39	Whitefish	.76	.39
Porgy	.81	.40	Shrimp	.83	.41	Wines	.90	-
Pork, bacon	.36	.25	Spanish mackerel	.73	.39	Yams	.78	.39

PIPING SYMBOLS

Item	Symbol	Item	Symbol
Bushing		Union	
Cap		Valve – Check, angle	
Cross		Valve – Check, straight	
Elbow – 45°		Valve – Cock	
Elbow – 90°		Valve – Diaphragm	
Gauge – Pressure		Valve – Float	
Gauge – Temperature		Valve – Gate, angle	
Orifice		Valve – Isolation, gate or ball	
Plug – Pipe		Valve – Globe, angle	
Pump – Centrifugal		Valve – Globe, straight	
Reducer – Concentric		Air Vent	
Reducer – Eccentric		Vacuum Breaker	
Steam Trap		Valve – Quick opening	
Strainer		Valve – Safety	
Tee		Valve – Solenoid	

Emerson Electric Co.
Global Headquarters
8000 West Florissant Avenue
St. Louis, Missouri, 63136
United States
T +1 314 679 8984
ContactUs@Emerson.com
Emerson.com/FinalControl

Final Control
North America

Marshalltown
301 South 1st Avenue
Marshalltown, Iowa, 50158
United States
T +1 641 754 3011

McKinney
3200 Emerson Way
McKinney, Texas, 75070
United States
T +1 800 558 5853

Stafford
3950 Greenbriar Drive
Stafford, Texas, 77477
United States
T +1 281 274 4400

Guadalajara
Calle 3 Lotes 13, 14 y 15 Manzana 3
Parque Industrial El Salto/El Salto
Jalisco, Mexico
T +52 33 3668 4002

Emerson Automation Solutions
World Area Headquarters

Asia Pacific
1 Pandan Crescent
Singapore 128461
T +65 6777 8211

Europe
Neuhofstrasse 19a P.O. Box
1046 CH 6340 Baar,
Switzerland
T +41 41 768 6111

Latin America
1300 Concord Terrace Suite 400
Sunrise, Florida 33323,
United States
T +1 954 846 5030

Middle East & Africa
Emerson FZE P.O. Box 17033,
Jebel Ali Free Zone - South 2,
Dubai, United Arab Emirates
T +971 4 8118100

Emerson.com
Facebook.com/EmersonAutomationSolutions
LinkedIn.com/company/Emerson-Automation-Solutions
Twitter.com/EMR-Automation

VCHBK-00028-EN 18/05

EMERSON

CONSIDER IT SOLVED