KEYSTONE RMI DUBEX BUTTERFLY VALVES

INSTALLATION AND MAINTENANCE INSTRUCTIONS

Please read these instructions carefully

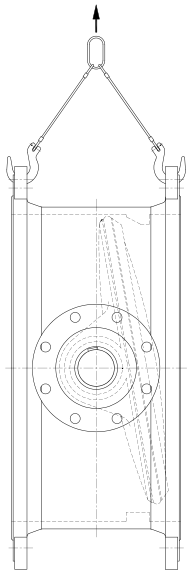

INTENDED VALVE USE

The valve is intended to be used only in applications within the pressure/temperature limits indicated in the P/T diagram of the product manual.

1 STORAGE AND HANDLING

1.1 Storage

When valves are to be stored for some time (2 months or more) before being fitted, storage should be in the original delivery crates or cases.

1.1.1 Storage conditions

The valves should be stored off the ground in a clean, dry indoor area.
Protect the valve from temperature and humidity extremes, and exposure to excessive dust, moisture, vibration, deformations, sunlight and ozone.

Recommendations

1. Temperature: storage temperature below 25°C, above 0°C preferable below 15°C.
2. Humidity: storage conditions should be such that condensation does not occur, store in a dry environment. Maximal 50% relative humidity.
3. Light: valve rubbers should be protected from light, in particular direct sunlight or strong artificial light with high ultra violet.
4. Ozone: storage rooms should not contain any equipment generating ozone. E.g. lamps, electric motors.

IMPORTANT

Before valves are being installed or used the following actions are recommended.

1. *Valves/parts have to be inspected and thoroughly cleaned if required.*
2. *Rubber parts need to be greased with silicone grease if not present anymore.*
3. *All surfaces in contact with seats have to be thoroughly cleaned and greased with silicone grease if stored for more than 5 months.*

1.2 Handling

To prevent damage during lifting, the valves should be lifted by hand or with appropriate lifting equipment. The valves should be protected from external events e.g. (bumps, hitting and vibration) during transport.
Any flange protection caps need to be removed before the valve is mounted in the pipeline.
Lift the valve with great care from the transport package (crate, pallet). While handling or installing the valve, ensure that no damage occurs to the valve, the pneumatic/electrical/hydraulic actuator or other instrumentation.

2 SPARE PARTS

Only original RMI spare parts are allowed to be used. Safe operation can not be guaranteed if third party spare parts are used.

3 INSTALLATION

WARNING

For safety reasons, it is important to take the following precautions before starting to work on the valve:

1. *Personnel making any adjustments to the valves should utilize suitable equipment. All required personal protection means should be worn.*
2. *The line must be depressurized before installing the valve.*
3. *Installation and handling of valves should be done only by personnel that is trained in all aspects of manual and mechanical handling techniques.*
4. *Misuse of the valve is not allowed. For example: the valve, handles, actuators or other parts may not be used as 'climbing tools'.*
5. *Ensure that valve pressure/temperature limitations marked on the valve's tagplate are within the service conditions. The trim number on the valve's tagplate identifies the valve materials. See Product Manual for valve specific P/T diagram and trim number definition.*
6. *Ensure that valve materials are compatible with the pipeline fluid.*

3.1 Visual valve inspection

1. Confirm that the materials of construction listed on the valve tagplate are appropriate for the service intended and are as specified.
2. Tag/name plate identification

Manufacturer:	Emerson RMI
Figure:	Dubex
Material trim:	e.g. 804
Direction:	U(nidirectional) or B(idirectional)
Size:	e.g. DN 1000
Tag no.:	if required
Design pressure:	e.g. PN 16
Design temperature:	e.g. 20°C
Year of construction:	e.g. 2004
Mass:	e.g. 2500 kg

3.2 Flange and pipe compatibility

Check matching of flange drilling pattern of valve and pipe before assembly.
Flanges have to meet the following requirements:
- The face inside diameter should be:
D min.: The valve Q-dimension + adequate disc clearance.
D max.: The inside diameter (ID) of standard pipe for the nominal size ISO 4200.
Use flange bolting in agreement with appropriate standard.

3.3 Valve installation

The valves are delivered as uni- or bidirectional. An uni-directional valve is equipped with an arrow on the body. The arrow points from the high pressure side to the low pressure side. The preferred direction in the pipeline is positioning the valve with the seat downstream of the shaft valve. The valve will control flow not exactly equal in both directions. The recommended installation position is shaft horizontal and the lower disc edge opening downstream (especially for slurry service and media with a tendency for sedimentation).
For optimum valve control and smooth performance, it is recommended to have 10 to 20 pipe diameters of straight run inlet piping and 3 to 5 pipe diameters straight outlet piping.
Do not use the valve to spread the flanges.

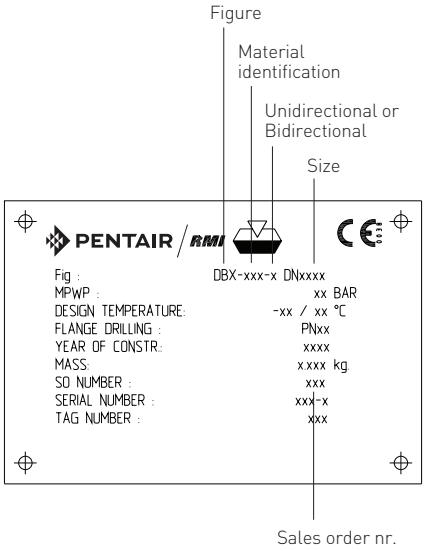

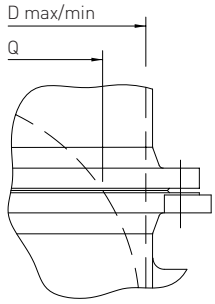

NOTES

- The valve can be installed in the pipe-line either with or without the actuator mounted on the valve. Make sure that you can turn the disc so you can check on interference of the disc with the adjacent piping.
- Do not use the valve as a support for the pipeline construction.
- Adjacent piping must be positioned so that minimal piping stresses are transmitted to the valve flanges during or after installation.
- Handling and lifting of the valves during installation MUST be performed following the same instructions described in previous section '1.2 Handling'.

IMPORTANT

Mating flange faces should be in good condition and free of dirt and/or inclusions. Both pipe insides to be well cleaned.

1. Check whether the distance between flanges meets the face-to-face valve dimensions. Spread the flanges with adequate tooling for easy insertion of the valve.
2. Close the valve so that the disc is at least 10 mm within the valve face.
3. Insert the valve with the gaskets between the flanges. Center the valve body and insert all flange bolts.
4. Maintain the valve flange alignment while gradually removing the flange spreaders and tighten the flange bolts hand tight.
5. Slowly open and close the valve to check for adequate disc clearance. Do not close the valve in dry condition. Coat the seat with silicon grease if no water is available.
6. Cross tighten all bolting to the proper torque.

3.4 Valve verification

Check the operation of the valve by operating it to 'full open' and 'full close' to verify the valve operation. The disc position indicator on the actuator or the manual operator should rotate between the 'full open' and 'full close' indicators. The valve disc rotates clockwise to close. Do not close the valve in dry condition, use silicon grease if no water is available.

3.5 Sources of possible danger

This section contains some examples of possible foreseen danger sources.

3.5.1 Mechanical

When manual operators are used, available space should be checked in order to avoid hands being clamped.
Mechanical sparks caused on impact of valve and e.g. tooling are a potential source of ignition of surrounding atmosphere.

3.5.2 Electrical

If static charges or stray electrical currents can initiate explosions the valve should be grounded.

3.5.3 Thermal

If the valve is used in applications with a fluid temperature > +40°C and < -20°C, the outside of the body should be protected by means of isolation against touching to avoid burning.
In case the valve is used in hot gas/fluid applications that might give exothermic reactions, precautions must be taken so that the valve surface can not lead to danger for people or the direct environment.

3.5.4 Operational

Closing a valve too fast may result in waterhammer in the upstream part of the pipeline. Waterhammer results in excessive stresses in the valve and will cause severe damage. Waterhammer should be avoided in all circumstances.
Due to differential pressure across the valve disc, butterfly valves have the tendency to be closed by the flow. This is called dynamic torque. Take care when unlatching or removing the valve operating mechanism.

3.6 TROUBLESHOOTING GUIDE

Symptom	Possible cause	Solution
Valve will not rotate	1. Actuator has failed	1. Repair or replace
	2. Valve packed with debris	2. Flush or clean to remove debris
Valve leaking	1. Valve not fully closed	1. Close valve
	2. Debris trapped in valve	2. Cycle and flush (with valve open) to remove debris
	3. Seat leakage	3. Re-adjust seat
	4. Seat is damaged	4. If possible rework seat and re-adjust
Jerky operation	1. Debris trapped in valve	1. Cycle and flush (with valve open) to remove debris
	2. Air supply actuator inadequate	2. Increase air supply pressure and/or volume

4 MAINTENANCE

The Dubex valve is designed to require a minimum of maintenance.

WARNING
Depressurize and, if necessary (i.e. in case of dangerous fluids) drain the line and flush with appropriate cleaning fluid before starting any maintenance. Failure to do so may cause serious personal injury and/or equipment damage.
Before disassembling the valve, ensure the valve has been decontaminated correctly from any harmful gasses or liquids and that it is within a safe temperature range for handling.
Personnel making any adjustments to the valves should utilize suitable equipment. All required personal protection means should be worn.
We recommend that personnel should be trained in all aspects of these instructions before carrying out handling of any valve.

4.1 Routine maintenance
Routine maintenance or lubrication is not required other than periodic inspection to ensure satisfactory operation and sealing. If problems occur with valve pressure tightness, the seat can be adjusted or replaced.

4.2 Replacement of the seat
It is not necessary to remove the valve from the pipeline in order to replace the seat. However, the disc must be accessible from the upstream side.
1. Turn the disc in the 'fully open' position.
2. Remove the retaining ring.
3. Replace the old seat by a new seat.
4. Replace the retaining ring.
5. Tighten the retaining ring screws.

Note: for detailed seat adjustment, contact factory.

4.3 Valve (dis)assembly
Contact factory for complete valve (dis) assembly instructions and illustrated parts.

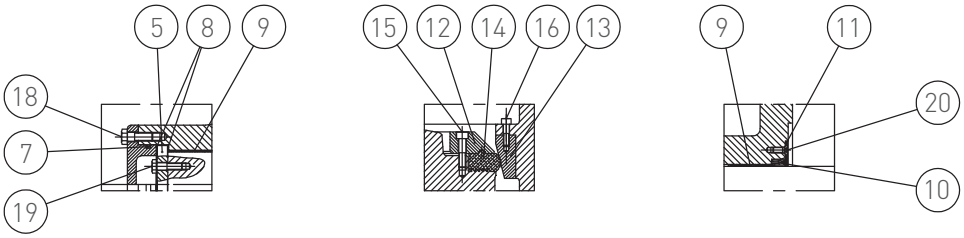

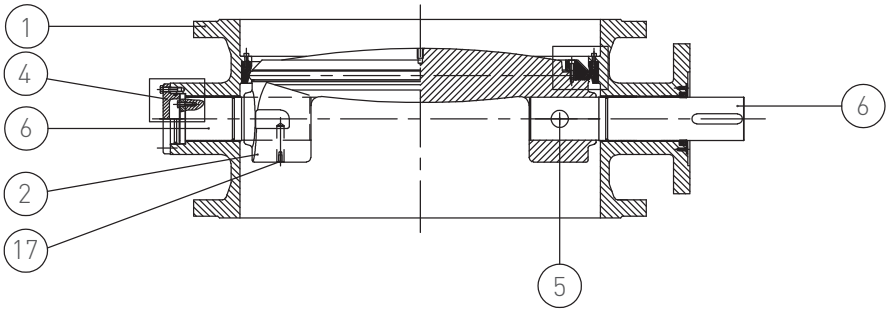

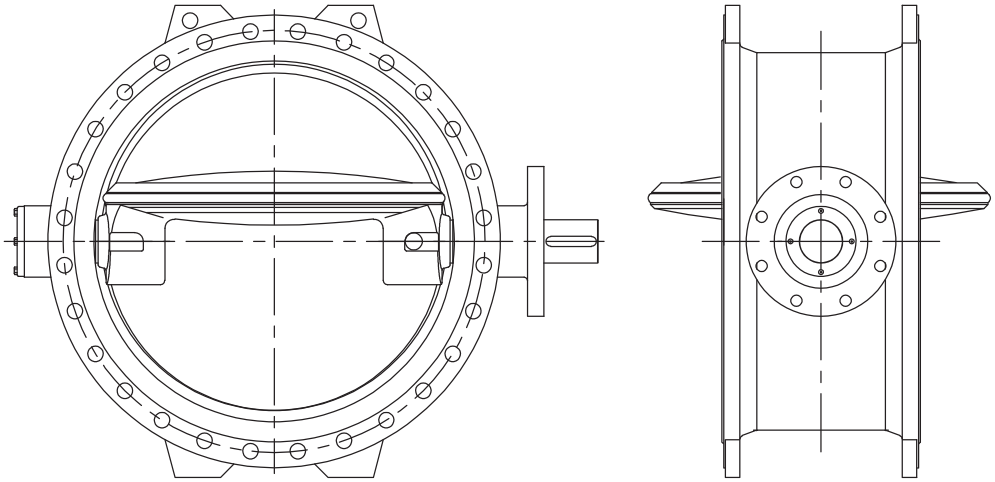

PARTS LIST

Part	Name	Part	Name
1	Body	11	Axial ring
2	Disc	12	Retaining ring
3	Disc pin top shaft	13	Body seat
4	Bottom cover	14	Disc seat
5	Positioning ring	15	Retaining ring bolts
6	Shafts	16	Seat ring bolts
7	O-ring	17	Disc pin bottom shaft
8	Axial bearing	18	Bottom cover bolts
9	Shaft bearing	19	Positioning ring bolts
10	Shaft seal	20	Axial ring bolts