KEYSTONE KNIFE GATE VALVES

FIGURE 955/956

Storage and installation instructions for F955 ported slide gate valves and F956 dual gland ported slide gate valves

STORAGE

IMPORTANT

Do not remove any identification or instruction tags from the valve assembly.
For optimum protection, undercover storage is desirable.

Valves

Flange faces should be protected at all times with wooden, or heavy cardboard shields. Valves should be handled carefully to prevent damage to exterior protective coating. Flange bolt holes should be coated with a suitable rust inhibitor for prolonged or exterior storage. Care should be taken in the placement of valves in storage to assure excessive pressure is not placed on polymer body shrouds or spindle covers so as to cause component damage.
F955 valves should be stored in the closed position.
F956 valves should be stored in the open position.
Handwheel spindle thread should NOT be lubricated as dirt will accumulate in threads.

Actuators

All air line and electrical cable entries should be plugged to prevent the ingress of foreign material. Actuator cylinders, where not fitted to a valve, should be stored with the piston rod fully retracted. Internal cylinder components should not require any corrosion inhibitor as they are assembled with a light coating of grease.

Spare parts

Seats, cord and packing should be carefully stored and protected from sharp edges or heavy objects which could damage sealing faces.

INSTALLATION INSTRUCTIONS

Heavy valves will require a chain block or crane to assist in the installation.
In difficult installations, large actuator cylinders may be removed from the valve and re-fitted after installation. When re-fitting the actuator cylinder care must be taken to ensure the cylinder/valve alignment is maintained (refer cylinder fitting instruction sheet). Larger actuated valves installed in vertical pipework will require structural support to take the weight of the actuator. This support may also be desirable in larger valves installed in non-vertical positions.

The F955/F956 is configured for installation in conventional bolted flange connections. Flanges are required to support the seat by presenting a flat surface across the seat. If the flange does not present a flat surface then companion flanges can be used. The companion flanges should be raised or flat face type to ensure full sleeve support and a continuous, unvarying I.D. If slip-on flanges are used without companion flanges, the pipe should be cut square and welded in position with the pipe end matched evenly with the flange face. (see below diagram)

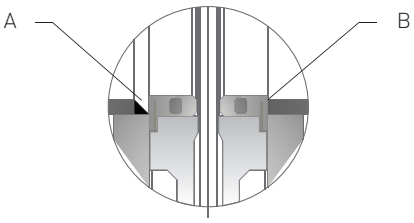

TYPICAL VALVE INSTALLATION WITH SCHEDULE 40 PIPE SHOWN.

A) Example of incorrect installation:
Void area of pipe flange/pipe connection does not support seat sufficiently. Fillet weld between pipe and flange shown creates this void area. Thin walled pipes can also fail to support seats.

B) Example of correct installation:
The inside diameter of the pipe/flange is Schedule 40 pipe inside diameter or less. The pipe/flange presents a flat face to the seat.

SAFETY PRECAUTIONS

Actuated valves are generally operated from a remote location.
Caution should be exercised when working in close proximity to these valves. The F955/F956 valves are supplied with upper body shrouds and spindle covers for environmental and safety purposes.
To ensure the long term operation and safety of the valves, the covers and shrouds must be maintained at all times.

CAUTION

Care must be taken with the installation of the F955/F956 valve to resilient faced companion flanges. Excessive tightening of the flange bolts will result in severe valve seat damage on valve actuation. Companion flange bolts must only be tightened as noted below.

1. Close valve.
2. Check the valve size is correct and there is adequate clearance to install the valve.
3. Check valve and pipe flange faces are clean and smooth, and that the valve bolt pattern is the same as the flange.
4. Check flange bolt sizing and ensure the bolt threads are clean (separate technical data is available).
5. Check the alignment of the upstream and downstream pipes and the squareness of the pipe flanges.

NOTE

If rubber coated pipe flanges are being used, the steel flange rings (minimum thickness of valve DN 50 - 200 (NPS 2 - 8) of 3 mm (0.12 inches) and DN 250 - 750 (NPS 10 - 30) of 5 mm (0.20 inches)) must be fitted on both sides of the valve and ensure correct opperation of seats.

6. Do not use flange gaskets with these valves as the seats form the seals.
7. Spread pipe flanges to clear valve, lower valve into position taking care to prevent damage to the valve seat flange as the valve is being lowered.
8. Liberally coat all flange bolt threads with an effective rust inhibitor/anti-seize compound, and install all flange bolts. Tighten bolts in a diagonally opposed sequence (see Figure 2) to assure even tightening of the flange faces. Ensure bolts in the chest area of the valve is not bottoming out in the blind holes. If the valve is being installed to resilient faced flange(s) care must be taken to assure the flange bolts are only tightened sufficiently to allow the resilient facing to contact the machined valve body face.
9. Ensure the valve flushing system is operational prior to cycling the valve with process pipeline media's.
10. Cycle the valve several times, checking for correct valve operation.
11. After pressurisation of the pipeline, check flanges and gate gland packing for leaks. Adjust if necessary.
12. Ensure upper body shrouds and spindle covers are in place.

FLANGE BOLTS

CAUTION

It is critical that flange bolts do not bottom out in the valve body tapped holes, as this could cause damage to the valve chest area. Stud bolts can be used in blind holes to alleviate the risk of flange bolts bottoming out.

To determine the bolt length for the blind holes in the flange bolting , add the width of the mating flange, + any washers to dimension 'R'.

Coating the flange bolt threads with an anti-seize compound (e.g. Loctite 729) is recommended to prevent bolt seizure.

BODY FLANGE TAPPING DEPTH

Valve size	Dimensions 'R'	
DN (NPS)	mm	inches
50 (2)	12	½
65 (2½)	12	½
80 (3)	12	½
100 (4)	12	½
125 (5)	15	9/16
150 (6)	15	9/16
200 (8)	18	¾
250 (10)	12	½
300 (12)	16	⅝
350 (14)	16	⅝
400 (16)	22	⅞
450 (18)	35	1⅜
500 (20)	32	1¼
600 (24)	30	1⅛
700 (28)	27	1 1/16
750 (30)	32	1¼

FIGURE 1

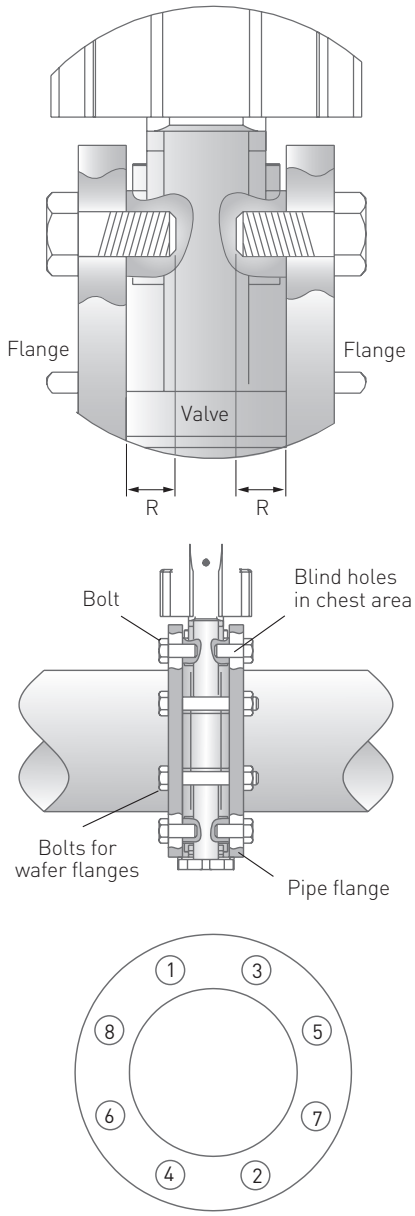

FLUSHING PORTS

CAUTION
Valves should be isolated prior to flushing, as valve operation during flushing, or defective seats, may cause the discharge of pipeline media through the flushing ports at full pipeline pressure.

Valves are provided with flushing ports to enable the valve body to be cleared of sedimentation or debris which could impair valve operation. The provision of a suitable flushing system to each valve is imperative to assure proper valve operation.
The type of flushing system employed will need to be decided by site/project personnel with due regard to such factors as, services available, pipeline media, solids content, service duty, and individual site considerations. Please contact our Emerson sales/engineering centres for recommendations on suitable systems.

NOTE
It should be noted that the use of 'positive flushing' is mandatory for valves used for line media's containing hard gravel like solids.

Manual flushing
With the valve in either the open or closed position, the flushing port plugs may be carefully removed (see caution note above). Apply a strong pressurized stream of fluid to each port allowing the discharge of debris from the opposing port. When body is cleared, refit port plugs.

Waste flushing
Flushing plugs may be removed from the ports and permanent pipework installed to each port to direct pipeline media, lost during valve cycling, to a collection point or to waste. Additional valving may be installed in this pipework to limit the velocity and/or duration of the media discharge.

Positive flushing
Pipework may be attached to the flushing ports to supply the lower valve body with line compatible fluid at a pressure significantly above that of the pipeline.The flushing supply system must also be capable of a volumetric delivery suitable for this application. The flow of flushing media into the main pipeline during valve actuation both minimizes the amount of debris and sedimentation in the lower bucket, and also clears larger pipeline solids from the seat area for valve re-opening. Some periodic flushing of the lower bucket will still be required to clear sedimentary solids.

Automatic flushing
Additional valving and pipework may be installed to the flushing ports to supply flushing media to one of the flushing ports and a drain facility to the other. The flushing system may then be activated by a control system during valve cycling.

Gland adjustment
Gate gland adjustment on new or rebuilt valves should be checked on valve installation to the pressurized pipeline. If leakage occurs, tighten each adjustment nut evenly until the leak subsides. If leakage persists check that the valve is not being subjected to line pressures above that of its pressure rating, or that the packing may be damaged, incorrectly installed or contaminated with foreign matter (refer gland packing instruction sheet).

CAUTION
Do NOT over tighten gland packing as this will impede valve operation and cause premature gate/packing wear.