KEYSTONE FIGURE 738 PNEUMATIC ACTUATOR

DN 50 - 200 MOUNTING INSTRUCTIONS

Mounting instructions for F738 pneumatic cylinder, DN 50 - 200 knife gate valves

GENERAL NOTES

A filter (5 micron), lubricator, regulator set is recommended on incoming air lines and before the valve. Where speed control is required, the speed control valves should be fitted to control the air exhausting from the cylinder (meter out control).
These can be fitted in the lines adjacent to the cylinder ports.
If the control lines are relatively short they can be fitted to the exhaust ports of the directional valve removed from the pipeline and disassembled (refer instructions).

CAUTION

Some combinations of knife gate valves and pneumatic cylinders are only suitable for operation at low air line pressures and pipe line pressures. Do not exceed operating conditions on valve and cylinder tags otherwise damage may occur.

MOUNTING INSTRUCTIONS

1. Ensure pipeline is not pressurized and any hazardous medium is drained away.
2. Remove clevis fastener (20).
3. Remove both bridge bolts (12).
4. Remove bridge assembly (6).
5. Remove handwheel and spindle assembly.
6. Remove port plugs from cylinder and fully extend piston rod, either manually or pneumatically.
7. Using 4 off capscrews provided, secure the cylinder to the bridge.
8. Locate the bridge/cylinder assembly (6) on to the pillars (7) and insert bridge bolts (12) through bridge (6) and tighten.
9. Locate piston rod over the gate (2) and insert clevis fastener (20) and secure.
10. Before operating valve, check alignment. See overleaf.
11. Open and close valve to ensure it operates correctly.

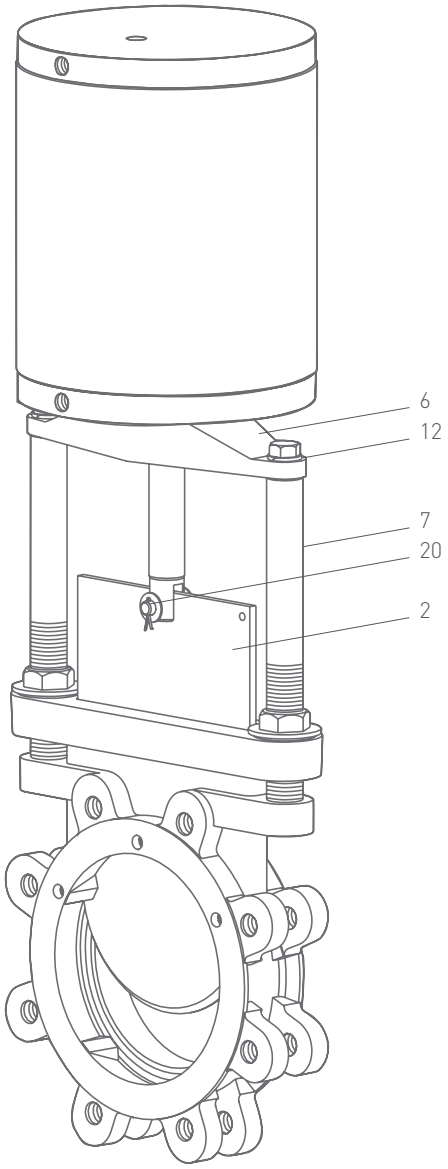

STORAGE

1. All air line and electrical cable entries should be plugged. If cylinders are not fitted to a valve, they should be stored with the piston rod fully retracted.
2. Cylinders are assembled with a light coating of grease on internal components.

ALIGNMENT

For correct valve operation, it is important that the valve gate is correctly aligned and seating in the valve, and that the cylinder stroking movement is correctly aligned to the valve gate.
Prior to fitting cylinder, check:

Valve:

Check gate alignment (gate closed)
If correctly fitted and aligned:

- Height of pillars (7) to bridge bolts (12) should be equal.
- Gate will be fitting firmly and evenly up against seating face in valve body.
- Gate and gland box will be approximately centerd with the valve body viewed from front and sides
- Gate will be true and parallel to valve body axis viewed from the side.
- Gate will not have significant movement when rocked backwards and forwards (upstream and downstream, not sideways)

If not fitted correctly:

- Gate is not seating properly into the wedges in the base of the valve and/or the gate guides in the upper body of the valve are badly worn, missing or incorrectly adjusted - fix as necessary.

Actuator:

After fitting cylinder to closed valve and before stroking cylinder;

- With cylinder rod fully extended, viewing from the side of the valve, check that the center line of the cylinder and it's extended rod are directly in line with valve blade axis, the valve body axis and the pillar supports. Then check center line alignment of valve and cylinder and rod viewing from the front of the valve. If either check reveals an out of alignment, then cylinder is not mounted squarely onto the valve and adjustment is necessary.

CYLINDER ACTUATED VALVES - INSTALLATION GUIDELINES

Cylinder actuated valves tend to be large and heavy and consideration must be given to adequately supporting both the actuated valve and adjoining pipe work particularly where light weight pipe or tube is being used.
Heavy cylinder actuated valves mounted in other than the vertical position can also cause the pipeline to twist.
Where possible, the cylinder actuated valves should be mounted in the vertical position with the cylinder uppermost to prevent gate misalignment and possible structural damage to the valve assembly.
If mounted in any other position (angled, horizontal etc.), the cylinders must be properly supported by a suitable structure.
Large valves using cylinders (not vertically mounted) in size 14 (400 mm bore x 600 stroke) and above must have a fully engineered structure.
Contact Emerson for advice or assistance.

NOTE:

To minimize risk to personnel, Emerson recommend the use of purpose built guards and shrouds.
Refer to the Emerson data sheet or consult factory for details.