Types 98L and 98H Backpressure Regulators and Relief Valves

WARNING

Failure to follow these instructions or to properly install and maintain this equipment could result in an explosion, fire and/or chemical contamination causing property damage and personal injury or death.

Fisher™ backpressure regulators and relief valves must be installed, operated and maintained in accordance with federal, state and local codes, rules and regulations, and Emerson Process Management Regulator Technologies, Inc. instructions.

If a leak develops or if the outlet continually vents gas, service to the unit may be required. Failure to correct trouble could result in a hazardous condition. Only a qualified person must install or service the unit.

Installation, operation and maintenance procedures performed by unqualified personnel may result in improper adjustment and unsafe operation. Either condition may result in equipment damage or personal injury. Use qualified personnel when installing, operating and maintaining the Types 98L and 98H backpressure regulators and relief valves.

W6155

TYPE 98H OR 98HM

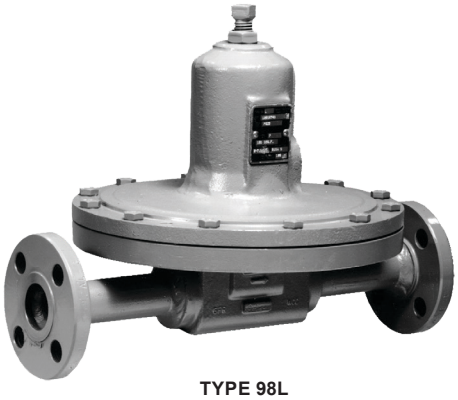

W6156

TYPE 98L

Figure 1. *Types 98L and 98H Backpressure Regulators and Relief Valves*

Introduction

Scope of the Manual

This manual provides instructions for the installation, adjustment, maintenance and parts ordering information of Types 98L and 98H Backpressure Regulators and Relief Valves. Instructions and parts lists for other equipment mentioned in this instruction manual are found in separate manuals.

Description

Types 98L and 98H are direct-operated, spring-loaded backpressure regulators or relief valves. Typical applications include use in wash tanks, small heaters, fuel and oil lines, air supply systems, test fixtures and sterilizers. Relief pressure ranges are 2 to 38 psig / 0.14 to 2.6 bar, in four ranges, for Type 98L and 15 to 200 psig / 1.0 to 13.8 bar, in four ranges for each sizes, for Type 98H. Type 98L is available on body sizes NPS 1/4, 1/2, 3/4 and 1 / DN 15, 20 and 25 and Type 98H on body sizes NPS 1/4, 1/2, 3/4, 1, 1-1/2 and 2 / DN 15, 20, 25, 40 and 50.

Specifications

This section lists the specifications for the Types 98L and 98H. Factory specifications are stamped on the nameplate fastened on the regulator at the factory.

Available Constructions

Type 98L: Direct-operated low-pressure backpressure regulator/relief valve with internal pressure registration and standard adjusting screw for 2 to 38 psig / 0.14 to 2.6 bar set pressure range
Type 98H: Direct-operated high-pressure backpressure regulator/relief valve with internal pressure registration and standard adjusting screw for 5 to 200 psig / 0.34 to 13.8 bar set pressure range
Type 98HM: Direct-operated high-pressure backpressure regulator/relief valve with external pressure registration and standard adjusting screw for 5 to 275 psig / 0.34 to 19.0 bar set pressure range

Body Sizes and End Connection Styles

TYPE	BODY MATERIAL	
	Cast Iron	WCC Steel, CF8M Stainless steel
98L	1/4, 1/2, 3/4, 1 NPT	1/4 through 1 NPT, NPS 1/2 through 1 / DN 15 through 25, SWE, CL150 RF, CL300 RF, PN16/25/40 RF
98H	1/4, 1/2, 3/4, 1, 1-1/2, 2 NPT	1/4 through 2 NPT, NPS 1/2 through 2 / DN 15 through 50, SWE, CL150 RF, CL300 RF, PN 16/25/40 RF
98HM	- - - -	1/2, 3/4, 1, 1-1/2, 2 NPT

Maximum Cold Working Pressures of Body Size and Materials[1][2]

REGULATOR	BODY SIZE	BODY AND SPRING CASE MATERIALS	MAXIMUM INLET PRESSURE[3]	
			psig	bar
Type 98L	All Sizes	Cast Iron	60	4.1
		Steel	125	8.6
		Stainless Steel	125	8.6
Type 98H	All Sizes	Cast Iron	300	20.7
		Steel	300	20.7
		Stainless Steel	300	20.7
Type 98HM	All Sizes	Steel	300	20.7
		Stainless Steel	300	20.7

Flow Coefficient

C_1: 35

IEC Sizing Coefficients

BODY SIZE		X_T	F_D	F_L	K_m
NPS	DN				
1/4	- - - -	0.78	0.50	0.91	0.83
1/2	15			0.83	0.69
3/4 and 1	20 and 25			0.88	0.77
1-1/2 and 2	40 and 50			0.92	0.85

Relief Pressure Ranges

See Tables 1 and 2

Shutoff Classification Per ANSI/FCI 70-3-2004

Metal Seats: Class IV
Polytetrafluoroethylene (PTFE): Class IV
Elastomer Seats: Class VI

Temperature Capabilities for Elastomer Parts[1][4]

MATERIAL	TEMPERATURE RANGE
Nitrile (NBR)	-40 to 180°F / -40 to 82°C
Neoprene (CR)	-40 to 180°F / -40 to 82°C
Fluorocarbon (FKM)[5]	0 to 300°F / -18 to 149°C Limited to 200°F / 93°C for hot water
Ethylenepropylene (EPDM)[5]	-40 to 275°F / -40 to 135°C
Perfluoroelastomer (FFKM)[5]	0 to 425°F / -18 to 218°C
PTFE Diaphragm protector	-40 to 400°F / -40 to 207°C

Temperature Capabilities for Metal Parts[1][4]

MATERIAL	TEMPERATURE RANGE
Cast iron[6]	-40 to 406°F / -40 to 207°C
WCC Steel	-20 to 450°F / -29 to 232°C
CF8M Stainless steel	-40 to 450°F / -40 to 232°C

Type 98HM Sensing Line Connection

NPS 1/2, 1-1/2 or 2 / DN 15, 40 or 50 Body: 1/8 NPT
NPS 3/4 or 1 / DN 20 or 25 Body: 1/4 NPT

Pressure Registration

Types 98L and 98H: Internal
Type 98HM: External

Options

- Handwheel or tee handle for Types 98L and 98H
- Tapped spring case vent for Types 98L, 98H and 98HM
- Seal washer to permit spring case pressure loading for Types 98L, 98H and 98HM

Approximate Weights

Type 98L

NPS 1/4 Body: 6 lbs / 3 kg
NPS 1/2 / DN 15 Body: 13 lbs / 6 kg
NPS 3/4 / DN 20 Body: 30 lbs / 14 kg
NPS 1 / DN 25 Body: 30 lbs / 14 kg

Type 98H

NPS 1/4 Body: 7 lbs / 4 kg
NPS 1/2 / DN 15 Body: 7 lbs / 2 kg
NPS 3/4 / DN 20 Body: 16 lbs / 7 kg
NPS 1 / DN 25 Body: 16 lbs / 7 kg
NPS 1-1/2 / DN 40 Body: 55 lbs / 25 kg
NPS 2 / DN 50 Body: 55 lbs / 25 kg

Type 98HM

NPS 1/2 / DN 15 Body: 8 lbs / 4 kg
NPS 3/4 or 1 / DN 20 or 25 Body: 20 lbs / 9 kg
NPS 1-1/2 or 2 / DN 40 or 50 Body: 73 lbs / 33 kg

1. The pressure/temperature limits in this instruction manual or any applicable standard limitation should not be exceeded.
2. Temperature and/or the body end connection may decrease these maximum pressures.
3. Maximum inlet pressure equals set pressure plus buildup.
4. Pressure and/or the body end connection may decrease these maximum temperatures.
5. Not for use on steam service.
6. Not available for Type 98HM.

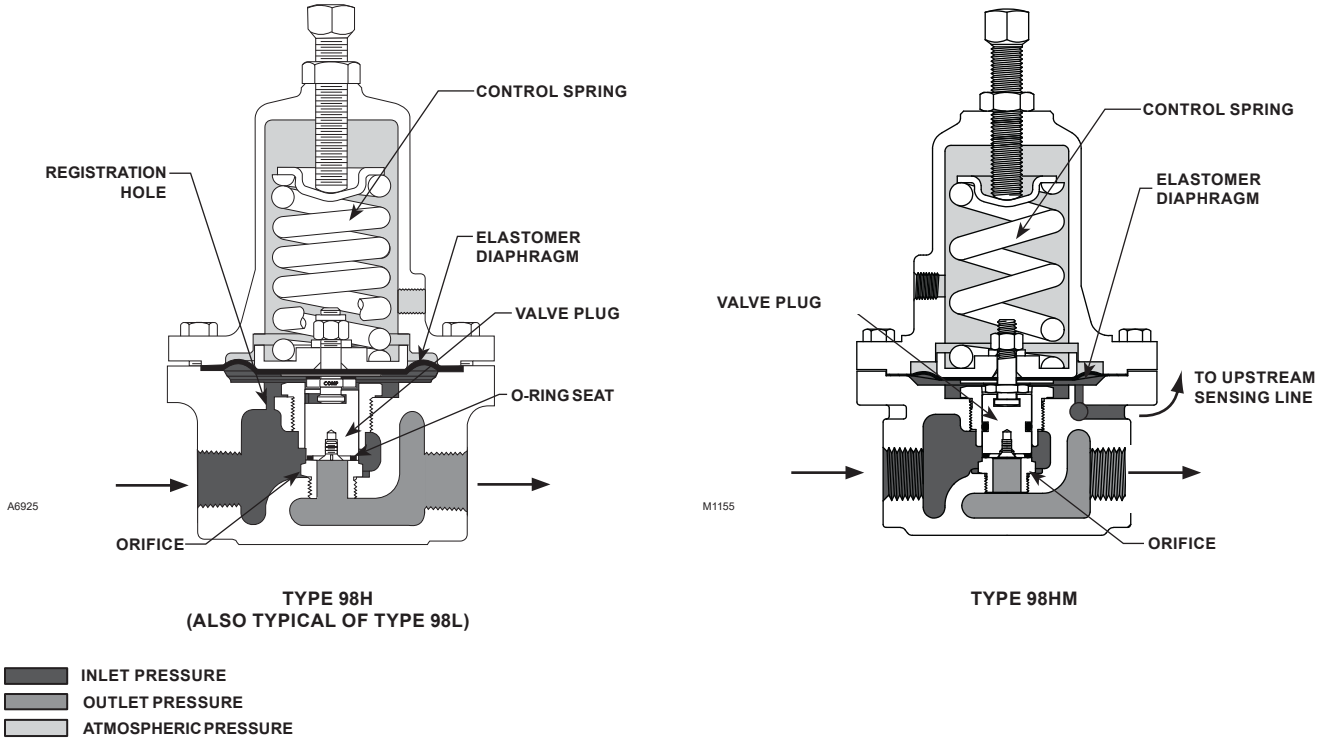

Figure 2. *98 Series Operational Schematics*

The Type 98HM can be used for backpressure or relief applications in liquid, gas or steam service. The Type 98HM features a sensing line connection for sensing pressure externally from the regulator. The Type 98HM is a direct-operated, spring-to-close regulator and requires no external power to operate. A seal washer for the set screw can be included when applications require pressure loading of the spring case (not available on NPS 1-1/2 and 2 / DN 40 and 50 bodies).

Note

Using a Type 98HM as a relief valve does not exclude the installation of an ASME certified full flow relief valve as specified by local codes and regulations or system design.

Principle of Operation

Relief or backpressure valves respond to changes in upstream pressure. Pressure changes register under the diaphragm (see Figure 2) through a registration hole in the valve body (through upstream sensing line connection for Type 98HM). When the pressure increases beyond the spring setting, the diaphragm pressure overcomes the spring compression. This causes the valve plug to move away from the orifice. The flow line through the valve is open and excess pressure is vented. When upstream pressure drops back to normal, the valve resumes its closed position.

Installation

WARNING

Personal injury or system damage may result if this relief valve/backpressure regulator is installed where service conditions could exceed the limits given on the Specifications section or regulator nameplate. Installations should be adequately protected from physical damage.

Overpressuring any portion of this equipment may cause equipment damage, leaks in the relief valve/ backpressure regulator, or personal injury due to bursting of pressure-containing parts. System operation within the limits shown in the Specifications section (page 2) does not eliminate the possibility of damage from external sources or debris in the pipeline. The relief valve/backpressure regulator should be inspected for damage regularly and after any overpressure condition.

Table 1. *Types 98L and 98H Relief Set Pressure Ranges*

BODY SIZES		TYPE 98L RELIEF SET PRESSURE RANGE(1)		TYPE 98H RELIEF SET PRESSURE RANGE(1)		SPRING COLOR	SPRING WIRE DIAMETER		SPRING FREE LENGTH	
NPS	DN	psig	bar	psig	bar		In.	mm	In.	mm
1/4	- - - -	2 to 7	0.14 to 0.48	15 to 35	1.0 to 2.4	Yellow	0.148	3.76	2.00	50.8
		6 to 14	0.41 to 0.97	25 to 75	1.7 to 5.2	Green	0.170	4.32	2.00	50.8
		12 to 25	0.83 to 1.7	70 to 140	4.8 to 9.6	Red	0.207	5.26	1.93	49.0
		20 to 38	1.4 to 2.6	130 to 200	9.0 to 13.8	Blue	0.225	5.72	2.08	52.8
1/2	15	2 to 7	0.14 to 0.48	15 to 35	1.0 to 2.4	Yellow	0.207	5.26	2.50	63.5
		6 to 14	0.41 to 0.97	25 to 75	1.7 to 5.2	Green	0.234	5.94	1.02	25.9
		12 to 25	0.83 to 1.7	70 to 140	4.8 to 9.6	Red	0.281	7.14	2.44	62.0
		20 to 38	1.4 to 2.6	130 to 200	9.0 to 13.8	Blue	0.331	8.41	2.25	57.2
3/4 and 1	20 and 25	2 to 7	0.14 to 0.48	15 to 35	1.0 to 2.4	Yellow	0.306	7.77	4.00	102
		6 to 14	0.41 to 0.97	25 to 75	1.7 to 5.2	Green	0.343	8.71	4.00	102
		12 to 25	0.83 to 1.7	70 to 140	4.8 to 9.6	Red	0.406	10.3	4.00	102
		20 to 38	1.4 to 2.6	130 to 200	9.0 to 13.8	Blue	0.468	11.9	3.75	95.3
1-1/2 and 2	40 and 50	- - - -	- - - -	5 to 35	0.3 to 2.4	Dark Gray	0.468	11.9	6.56	167
		- - - -	- - - -	20 to 65	1.4 to 4.5	Light Blue	0.531	13.5	6.56	167
		- - - -	- - - -	50 to 100	3.5 to 6.9	Light Gray	0.562	14.2	6.56	167
		- - - -	- - - -	80 to 170	5.5 to 11.7	Black	0.625	15.9	6.56	167

1. All springs may be backed off to 0 psig / 0 bar. However, highest capacities and best performances are obtained by using these springs in their recommended ranges.

Table 2. *Type 98HM Relief Set Pressure Ranges*

SPRING MATERIAL	BODY SIZE		SPRING RANGE		SPRING COLOR	SPRING WIRE DIAMETER		SPRING FREE LENGTH	
	NPS	DN	psig	bar		In.	mm	In.	mm
Steel	1/2	15	15 to 35	1.0 to 2.4	Yellow	0.207	5.26	2.50	63.5
			25 to 75	1.7 to 5.2	Green	0.234	5.94	2.62	66.5
			70 to 140	4.8 to 9.6	Red	0.281	7.14	2.44	62.0
			130 to 200	9.0 to 13.8	Blue	0.331	8.41	2.25	57.2
	3/4 and 1	20 and 25	15 to 35	1.0 to 2.4	Yellow	0.306	7.77	4.00	102
			25 to 75	1.7 to 5.2	Green	0.343	8.71	4.00	102
			70 to 140	4.8 to 9.6	Red	0.406	10.3	4.00	102
			130 to 200	9.0 to 13.8	Blue	0.468	11.9	3.75	95.3
	1-1/2 and 2	40 and 50	5 to 35	0.34 to 2.4	Dark Gray	0.469	11.9	6.50	165
			20 to 65	1.4 to 4.5	Light Blue	0.531	13.5	6.50	165
			50 to 100	3.5 to 6.9	Light Gray	0.563	14.3	6.50	165
			80 to 170	5.5 to 11.7	Black	0.656	16.7	6.50	165
Stainless steel	1/2	15	15 to 100	1.0 to 6.9	Unpainted	0.282	7.16	2.50	63.5
			100 to 275	6.9 to 19.0	Unpainted	0.375	9.53	2.50	63.5
	3/4 and 1	20 and 25	15 to 100	1.0 to 6.9	Unpainted	0.432	11.0	4.03	102
			100 to 275	6.9 to 19.0	Unpainted	0.562	14.2	4.03	102

1. All springs may be backed off to 0 psig / 0 bar. However, highest capacities and best performances are obtained by using these springs in their recommended ranges.

Table 3. *Torque Specifications*

BODY SIZES		SPRING CASE		ORIFICE	
NPS	DN	FT-LB	N•m	FT-LB	N•m
1/4	- - - -	4.5 to 5.0	6,1 to 6,8	8 to 12	11 to 16
1/2	15	10 to 13	14 to 18	29 to 35	39 to 47
3/4, 1	20, 25	24 to 30	33 to 41	33 to 42	45 to 57
1-1/2, 2	40, 50	40 to 50	54 to 68	140 to 170	190 to 230

Unbox and inspect the valve. Remove pipe scale and other foreign material from the connecting pipeline. Apply a suitable pipe compound to the external threads. The relief valve can be installed in any position as long as the flow is in the direction indicated by the arrow cast on the body.

Overpressure Protection

WARNING

Overpressuring any portion of this equipment may result in equipment damage, leaks in the relief valve / backpressure regulator, or personal injury due to bursting of pressure-containing parts. The system should be inspected after any overpressure condition.

Relief or backpressure ranges are from 2 to 200 psig / 0.14 to 13.8 bar. The individual spring range of your relief valve is stamped on the nameplate.

Maximum inlet pressures depend upon body materials and temperatures. See the Specifications section for the maximum inlet pressure of the valve. The valve should be inspected for damage after any overpressure condition.

Vents

WARNING

If using a Type 98L, 98H or 98HM Backpressure Regulator or Relief Valve on hazardous or flammable gas service, personal injury and property damage could occur due to fire or explosion of vented gas that may have accumulated.

To prevent such injury or damage, provide piping or tubing to vent the gas to a safe, well-ventilated area. Also, when venting a hazardous gas, the piping or tubing should be located far enough away from any buildings or windows so to not create a further hazard, and the vent opening should be protected against anything that could clog it.

If remote venting is necessary, an optional tapped vent in the spring case is available. Install remote vent lines in the spring case and outlet openings. The vent lines must have the largest practical diameter and be as short as possible with a minimum number of bends or elbows.

Startup

Key numbers are shown in Figures 3 through 5. With proper installation completed and system equipment properly adjusted, close any vent valves, and slowly open the upstream shutoff valve while using pressure gauges to monitor pressure.

If set pressure adjustment is necessary, monitor the inlet pressure with a gauge during the adjustment procedure.

Adjustment

Each unit is factory set for the pressure specified on your order. The allowable spring range is stamped on the nameplate. If a pressure setting beyond the indicated range is required, replace with the appropriate spring. Be sure to label the valve to indicate the new pressure range.

Always use a pressure gauge to monitor pressure when making adjustments.

All regulator springs can be backed off to 0 psig / 0 bar. Recommended set pressure ranges available, maximum inlet pressures and temperatures, and color codes of the respective springs are shown in the Specifications section and Tables 1 and 2.

Loosen the jam nut (key 17). To increase the setting, turn the adjusting screw (key 15) clockwise. Turn the adjusting screw counterclockwise to decrease the setting. Tighten the jam nut.

Shutdown

Close the upstream shutoff valve, and release all pressure from the backpressure regulator/relief valve.

Maintenance

WARNING

To avoid personal injury and equipment damage, isolate the valve from all pressure. Cautiously release pressure from the valve before attempting disassembly.

Due to normal wear and damage that may occur from external sources, relief valve parts such as the O-rings, gaskets, diaphragm, orifice and valve plug should be inspected periodically and replaced as necessary. The frequency of inspection and replacement depends upon the severity of service conditions or the requirements of state and federal laws.

Instructions are given below for disassembly of the Types 98L and 98H backpressure regulators/relief valves. These valves do not have to be removed from the pipeline to inspect internal parts. Suitable lubricants are indicated on the assembly drawings. Apply the lubricants as the relief valve is being reassembled. Refer to Figures 3, 4 and 5 while servicing the relief valve.

CAUTION

Metal diaphragms have thin sharp edges. To avoid hand cuts, use caution when handling the diaphragm and particularly the diaphragm edge.

Type 98 relief valves contain or may contain a thin metal diaphragm. Use care when handling the metal diaphragms to prevent hand injuries or damage to the diaphragm.

1. Relieve the spring tension by loosening the jam nut (key 17) and turning the adjusting screw (key 15) counterclockwise. Remove the cap screws (key 16). Lift off the spring case (key 2), upper spring seat (key 9) and spring (key 11).
2. Lift out the diaphragm unit which includes the pusher post (key 6), lower spring seat (key 8), diaphragm

head (key 25, Type 98L), washer (key 7), valve plug (key 4) and diaphragm (key 12).

There will be two diaphragms if the diaphragm material is metal or fluorocarbon (FKM) except for Type 98L, NPS 1/4, 2 to 7 psi / 0.14 to 0.48 bar range which uses only one metal diaphragm.

For Type 98HM, two diaphragms are also required if material used is Ethylenepropylene (EPDM) except for NPS 3/4 or 1 / DN 20 or 25 which uses only one Ethylenepropylene (EPDM) diaphragm.

Refer to Figures 3, 4 and 5 for the diaphragm and gasket assembly.

3. Check the orifice (key 3). If it needs replacing or repairing, unscrew the valve plug guide (key 5) and then the orifice. The valve plug can be removed by sliding it off of the pusher post (key 6).

Note

If damage to elastomer or metal seating surfaces is severe, replace the orifice (key 3) and valve plug O-ring (key 22) with new parts. However, by following the lapping procedure below, it is possible to repair metal seating surfaces if they are only slightly worn or scratched.

4. Lapping procedure:
   a. Place a small amount of 500-grit silicon carbide or aluminum oxide lapping compound on a flat surface such as a piece of heavy plate glass.
   b. Take the valve plug (key 4) or orifice (key 3) and move it in a figure 8 motion on the lapping compound. Do not allow the part to tip or rock since this would round the corners.
   c. Repeat step b for each part, using an 800-grit or 1000-grit silicon carbide or aluminum oxide lapping compound.
   d. Wash away all traces of the lapping compound. To help prevent scratching the seating surfaces, a light coat of oil may be applied before returning the valve plug and orifice to the body (key 1). See Table 3 for torque specifications.
5. Return the orifice and valve plug guide (key 5) to the body.
6. Place a small amout of sealant on the threads before installing the valve plug guide and the orifice. See Table 3 for torque specifications.
7. To replace the valve plug O-ring (key 22), remove the screw (key 24) and O-ring retainer (key 21) from the plug. Remove and replace the O-ring.
8. Separate the remainder of the diaphragm unit parts. Take the locknut (key 26) off of the pusher post (key 6). Slide off the lock washer (key 23), lower spring seat, diaphragm head (Type 98L), diaphragm, washer (key 7) and gasket (key 10).
9. Slip the plug (key 4) onto the pusher post. Place a gasket (key 10) on the shaft of the pusher post (key 6) over the threaded portion until it rests on the base of the post. If elastomer diaphragm is used, place a metal washer (key 7) on top of the gasket. For Type 98H, NPS 1-1/2 to 2 / DN 40 to 50 with metal diaphragm, place another gasket on the shaft of the pusher post until it rests on the bottom diaphragm head (key 25), see Figure 4. Refer to Figures 3 to 5.

Note

If a metal diaphragm is to be replaced by an elastomer diaphragm or an elastomer diaphragm by a metal diaphragm, a new pusher post is required. Each diaphragm material requires a different pusher post length and make sure the proper number of metal or elastomer diaphragm that will be used is followed. Refer to the Parts List section for the correct number of diaphragm to be used.

10. For the metal diaphragms, replace the large diaphragm gasket (key 19) on the surface of the body (key 1) that will support the diaphragms. There will be two diaphragms used per regulator, except for Type 98L, NPS 1/4 with 2 to 7 psi / 0.14 to 0.48 bar set pressure range which uses only one metal diaphragm. The raised surfaces of the metal diaphragms should be placed in the unit so that they are facing toward the assembler (toward the spring) except only when one diaphragm is being used then the raised surface should be facing down (towards the body). See Figures 3 to 5 as references.
11. Slip the lower spring seat (key 8) and lock washer (key 23) back onto the pusher post. Screw on the locknut (key 26) and return the diaphragm unit to the body (key 1).
12. Set the spring (key 11) in the lower spring seat and place the upper spring seat (key 9) on the spring.
13. Put the spring case (key 2) over the spring and onto the body. Tighten the cap screws (key 16) finger tight only.
14. To ensure proper slack in the diaphragm, apply some spring compression by turning the adjusting screw clockwise. Finish tightening the cap screws.

Parts Ordering

When corresponding with your local Sales Office about this equipment, always reference the equipment serial number stamped on the nameplate. When ordering replacement parts, specify the complete 11-character part number of each required part as found in the following parts list. Separate kits containing all recommended spare parts are available.

Parts List

Note

In this parts list, parts marked NACE are intended for corrosion-resistant service as detailed in the NACE International standard MR0175-2003.

Types 98L, 98H and 98HM (Figures 3, 4 and 5)

Key	Description	Part Number
	Type 98L	
	Parts Kits	
	Elastomer Trim (include keys 3, 4, 10, 12, 21, 22 and 24)	
	NPS 1/2 / DN 15 body	R98LX000022
	NPS 3/4 and 1 / DN 20 and 25 bodies	R98LX000032
	Metal Trim (include keys 3, 4, 10, 12 and 19)	
	NPS 1/2 / DN 15 body	R98LX000052
	NPS 3/4 and 1 / DN 20 and 25 bodies	R98LX000062
	Type 98H	
	Parts kit	
	Elastomer Trim (include keys 3, 4, 10, 12 and 14 (for NPS 1-1/2 and 2 / DN 40 and 50 only), 21, 22 and 24)	
	NPS 1/2 / DN 15 body	R98HX000022
	NPS 3/4 and 1 / DN 20 and 25 bodies	R98HX000032
	NPS 1-1/2 and 2 / DN 40 and 50 bodies	R98HX000072
	Metal Trim (include keys 3, 4, 10, 12 and 19)	
	NPS 1/2 / DN 15 body	R98HX000052
	NPS 3/4 and 1 / DN 20 and 25 bodies	R98HX000062
	NPS 1-1/2 and 2 / DN 40 and 50 bodies	R98HX000082
1	Body	
2	Spring Case	
3*	Orifice	See following table
4*	Valve Plug	See following table
5	Valve Plug Guide	
6	Pusher Post	
7	Washer (Elastomer diaphragm only)	
8	Lower Spring Seat	
9	Upper Spring Seat, Steel plated	
10*	Gasket	
	Types 95L and 95H, Composition	
	NPS 1/2 / DN 15 body	ERAA02651A0
	NPS 3/4 and 1 / DN 20 and 25 bodies	ERCA00502A0
	NPS 1-1/2 and 2 / DN 40 and 50 bodies (2 required, for Type 98H only)	ERCA00579A0
11	Relief Valve Spring	
12*	Diaphragm	See following table
13	Nameplate, (not shown)	
14*	O-ring, Type 98H only, NPS 1-1/2 and 2 / DN 40 and 50 bodies, Elastomer seat only	
	Nitrile (NBR)	1C782206992
15	Adjusting Screw, Steel plated	
16	Cap Screw, Zinc-plated steel	
17	Jam Nut, Zinc-plated steel	
18	Drive Screw (not shown) (2 required)	
19*	Diaphragm Gasket, Composition (use with 302 Stainless steel diaphragm)	
	Type 98H	
	NPS 1/2 / DN 15 body	ERCA00485A0
	NPS 3/4 and 1 / DN 20 and 25 bodies	ERCA00510A0
	NPS 1-1/2 and 2 / DN 40 and 50 bodies	ERCA00526A0
	Type 98L	
	NPS 1/2 / DN 15 body	1E397004022
	NPS 3/4 and 1 / DN 20 and 25 bodies	ERCA00556A0
20	Diaphragm Protector, PTFE (not shown)	
21	O-ring Retainer (Elastomer seat only)	
	NPS 1/2 / DN 15 body	
	416 Stainless steel	1L341535232
	316 Stainless steel, NACE	1L341535072
	NPS 3/4 and 1 / DN 20 and 25 bodies	
	416 Stainless steel	1L343035132
	316 Stainless steel, NACE	1L343035072
	NPS 1-1/2 and 2 / DN 40 and 50 bodies	
	416 Stainless steel	1P787535132
	316 Stainless steel, NACE	1P787535072
22*	O-ring	
	Types 98L and 98H, Elastomer seat only	
	NPS 1/2 / DN 15 body	
	Nitrile (NBR)	1D288806992
	NPS 3/4 and 1 / DN 20 and 25 bodies	
	Nitrile (NBR)	1C782106992
22	L-ring, Type 98H only, Elastomer seat only, NPS 1-1/2 and 2 / DN 40 and 50 bodies	
	Nitrile (NBR)	1P787403202
23	Lock Washer, Steel	
24	Machine Screw, Stainless steel, Elastomer seat only	
	NPS 1/2 / DN 15 body, NACE	1J4159X0012
	NPS 3/4 and 1 / DN 20 and 25 bodies	1L343538992
	NPS 1-1/2 and 2 / DN 40 and 50 bodies, NACE	1P788638992
25	Diaphragm Head	
26	Locknut, Steel plated	
27	Tee Handle Assembly (not shown), Types 98L and 98H only	
28	Handwheel (not shown), Zinc, NPS 1/2 / DN 15	
29	Machine Screw (not shown), Steel plated,	
30	Lockwasher (not shown), Steel,	
45*	O-ring (not shown) Types 98L and 98H (with sealed adjusting screw only)	
50	Sealing Washer (not shown)	
51	NACE Tag (not shown)	
52	Tag Wire (not shown), NACE	
53	O-ring (for Type 98HM only)	
54	Type Y602-12 (shown in the 98HM Series assemblies)	

*Recommended spare part.

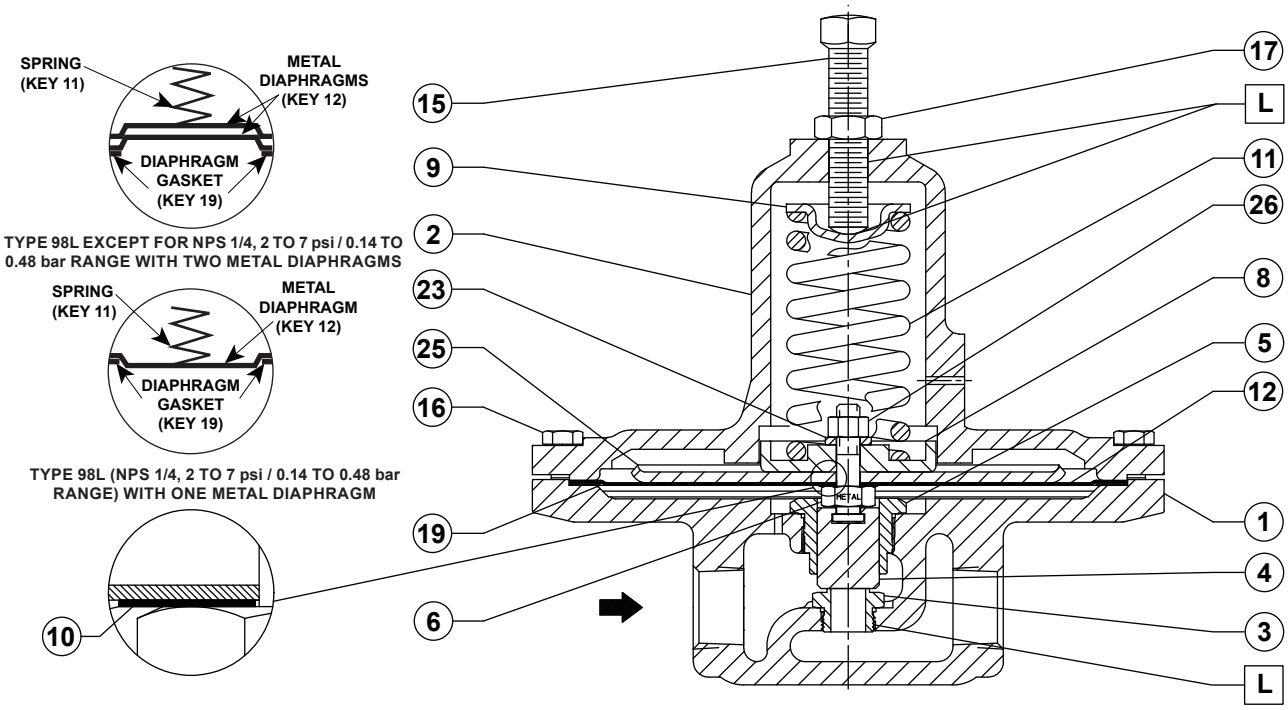

TYPE 98L ASSEMBLY WITH METAL DIAPHRAGM

30A7027

□ - APPLY LUBRICANT[1]
L = ANTI-SEIZE COMPOUND

1. Lubricants must be selected such that they meet the temperature requirements.

Figure 3. *Type 98L Relief Valve Assemblies*

Key 3 Orifice*

BODY SIZE		METAL TO METAL SEAT		ELASTOMER SEAT Standard Applications	
NPS	DN	416 Stainless Steel	316 Stainless Steel	416 Stainless Steel	316 Stainless Steel
1/2 3/4, 1	15 20, 25	1E395046172 1E398046172	1E395035072 1E398035072	1L341735132 1L343135132	1L341735072 1L343135072
1-1/2, 2	40, 50	2P787046172	2P787035072	1P787135132	1P787135072

Key 4 Types 98L and 98H Valve Plug*

BODY SIZES		METAL TO METAL SEAT		ELASTOMER SEAT Standard Applications	
NPS	DN	416 Stainless Steel	316 Stainless Steel	416 Stainless Steel	316 Stainless Steel
1/2 3/4, 1	15 20, 25	1L344146172 1L343746172	1L344135162 1L343735162	1L344335132 1L343635132	1L344335072 1L343635072
1-1/2, 2	40, 50	1P787246172	1P787235072	1P787346172	1P787335072

Key 12 Diaphragm*

TYPE	BODY SIZES		DIAPHRAGM MATERIAL	
	NPS	DN	Neoprene (CR)	302 Stainless Steel (2 required)
98L	1/2 3/4, 1	15 20, 25	ERCA00514A0 ERCA00603A0	ERCA00506A0 ERCA00112A0
98H and 98HM	1/2	15	ERCA00512A0	ERCA00496A0
	3/4, 1 1-1/2, 2	20, 25 40, 50	ERCA00518A0 ERCA00661A0	GF05737X022 ERCA00527A0

*Recommended spare part.

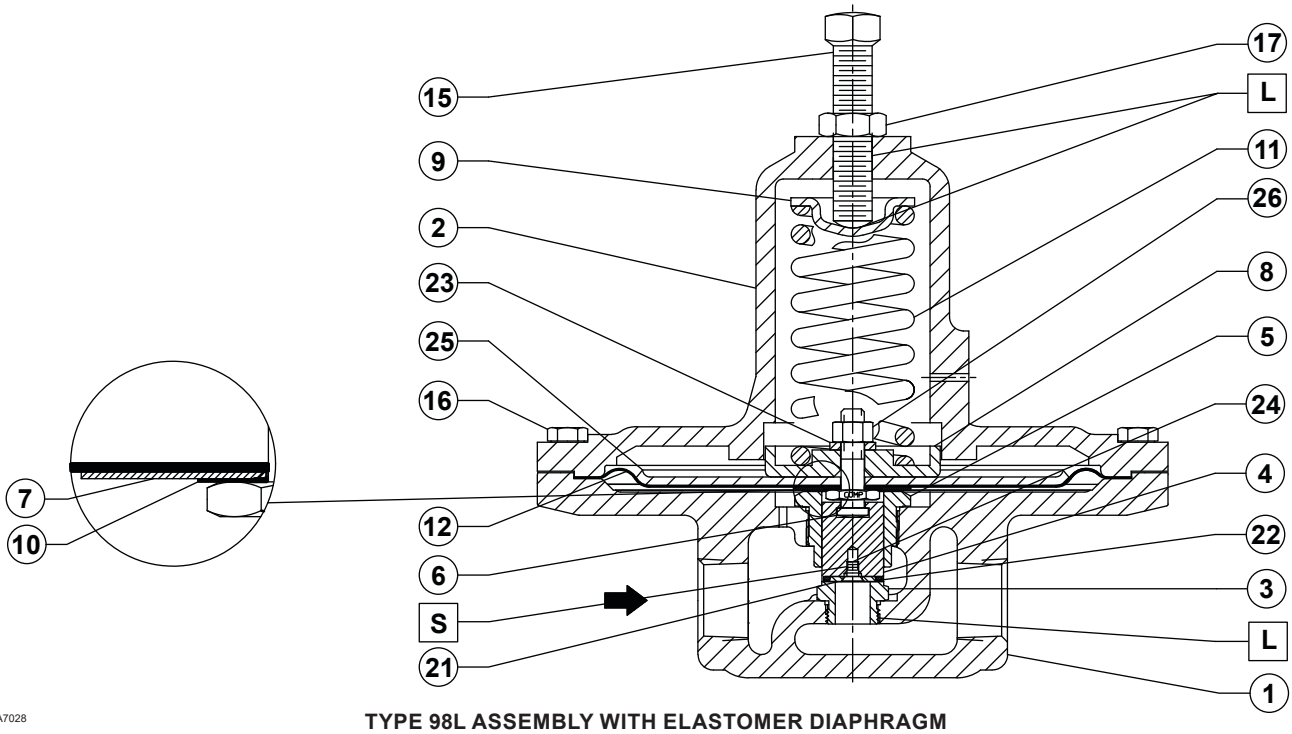

30A7028

TYPE 98L ASSEMBLY WITH ELASTOMER DIAPHRAGM

☐ - APPLY LUBRICANT OR SEALANT(1)
L = ANTI-SEIZE COMPOUND
S = MULTI-PURPOSE PTFE THREAD SEALANT

1. Lubricants and sealants must be selected such that they meet the temperature requirements.

Figure 3. *Type 98L Relief Valve Assemblies (continued)*

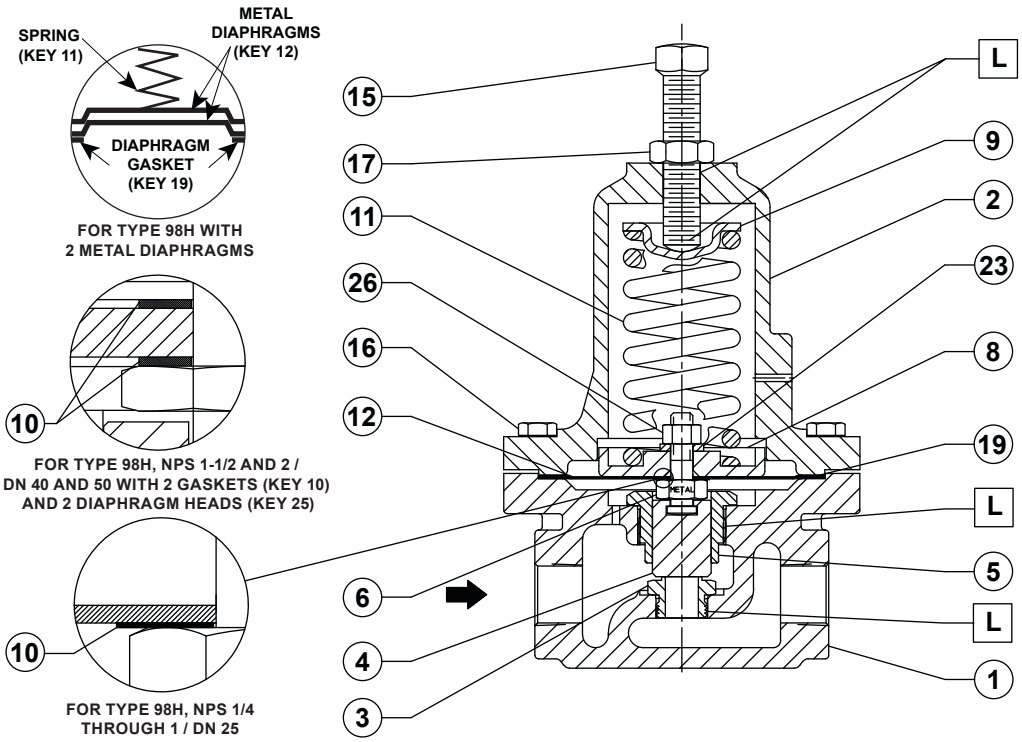

30A7029

TYPE 98H ASSEMBLY WITH METAL DIAPHRAGM

☐ - APPLY LUBRICANT OR SEALANT(1)
L = ANTI-SEIZE COMPOUND

1. Lubricants and sealants must be selected such that they meet the temperature requirements.

Figure 4. *Type 98H Relief Valve Assemblies*

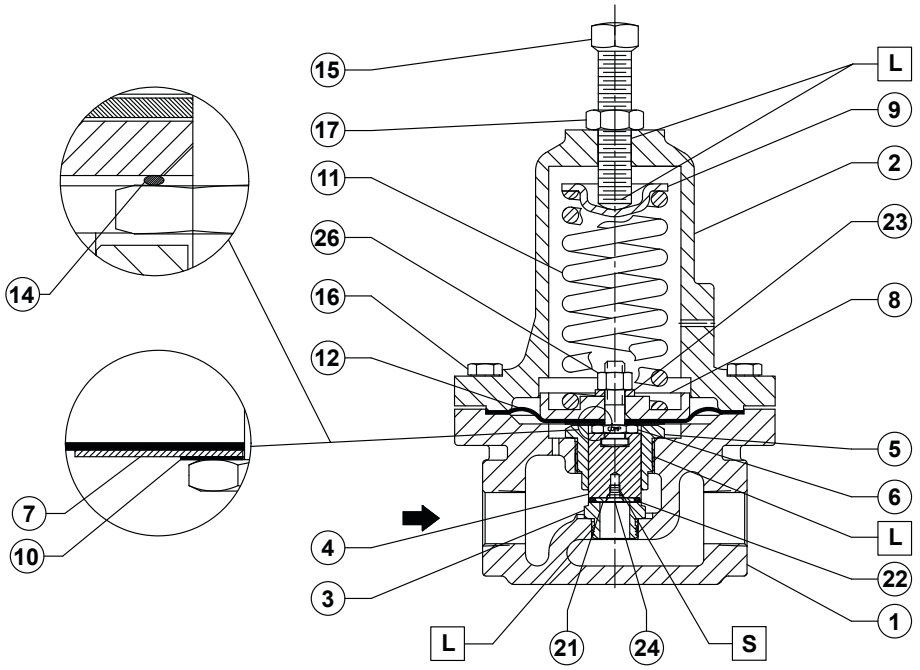

TYPE 98H ASSEMBLY WITH ELASTOMER DIAPHRAGM

30A7030

☐ - APPLY LUBRICANT OR SEALANT(1)
L = ANTI-SEIZE COMPOUND
S = MULTI-PURPOSE PTFE THREAD SEALANT

1. Lubricants and sealants must be selected such that they meet the temperature requirements.

Figure 4. *Type 98H Relief Valve Assemblies (continued)*

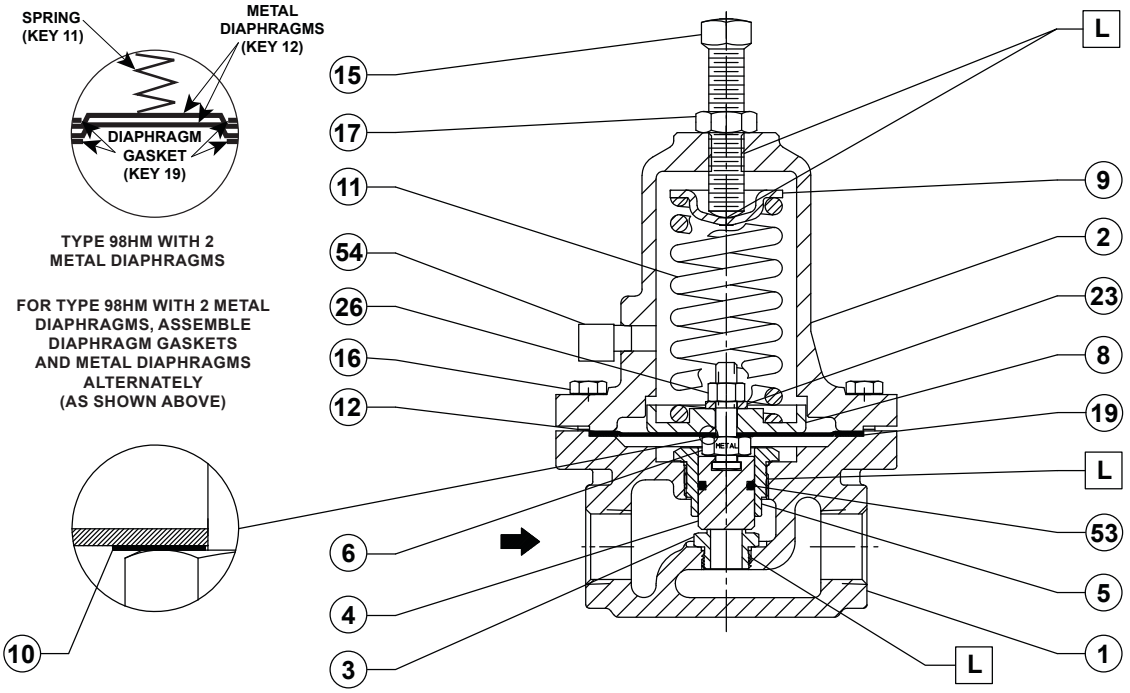

TYPE 98HM ASSEMBLY WITH METAL SEAT AND DIAPHRAGM

37B4753

☐ - APPLY LUBRICANT(1)
L = ANTI-SEIZE COMPOUND

1. Lubricants must be selected such that they meet the temperature requirements.

Figure 5. *Type 98HM Relief Valve Assemblies*

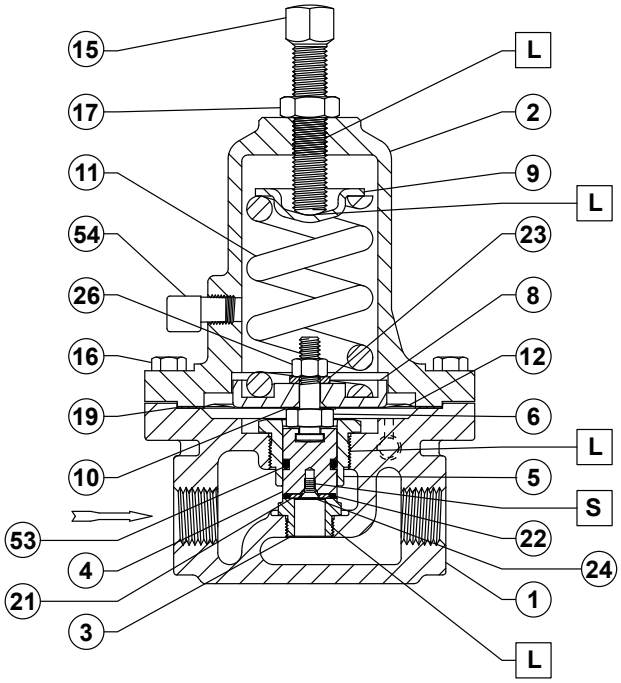

TYPE 98HM ASSEMBLY WITH ELASTOMER SEAT AND METAL DIAPHRAGM

37B4754

☐ - **APPLY LUBRICANT OR SEALANT**[1]
L = ANTI-SEIZE COMPOUND
S = MULTI-PURPOSE PTFE THREAD SEALANT

1. Lubricants and sealants must be selected such that they meet the temperature requirements.

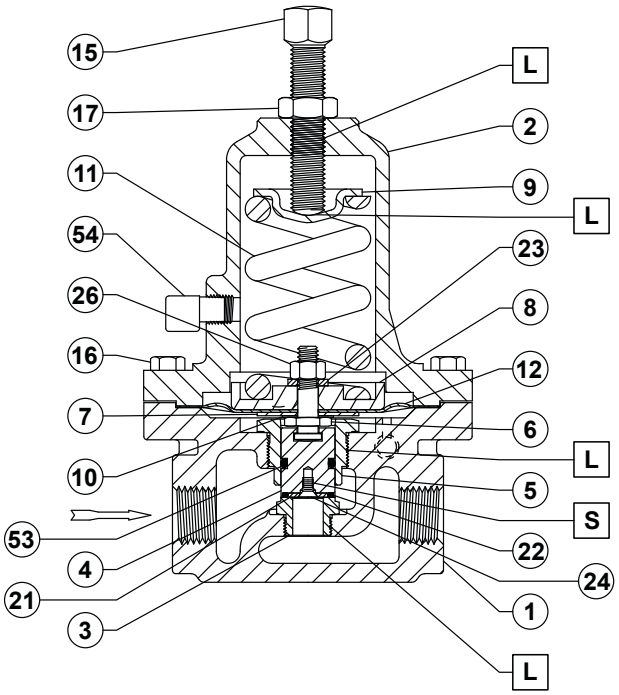

TYPE 98HM WITH ELASTOMER SEAT AND DIAPHRAGM

39B3360

☐ - **APPLY LUBRICANT OR SEALANT**[1]
L = ANTI-SEIZE COMPOUND
S = MULTI-PURPOSE PTFE THREAD SEALANT

1. Lubricants and sealants must be selected such that they meet the temperature requirements.

Figure 5. *Type 98HM Relief Valve Assemblies (continued)*

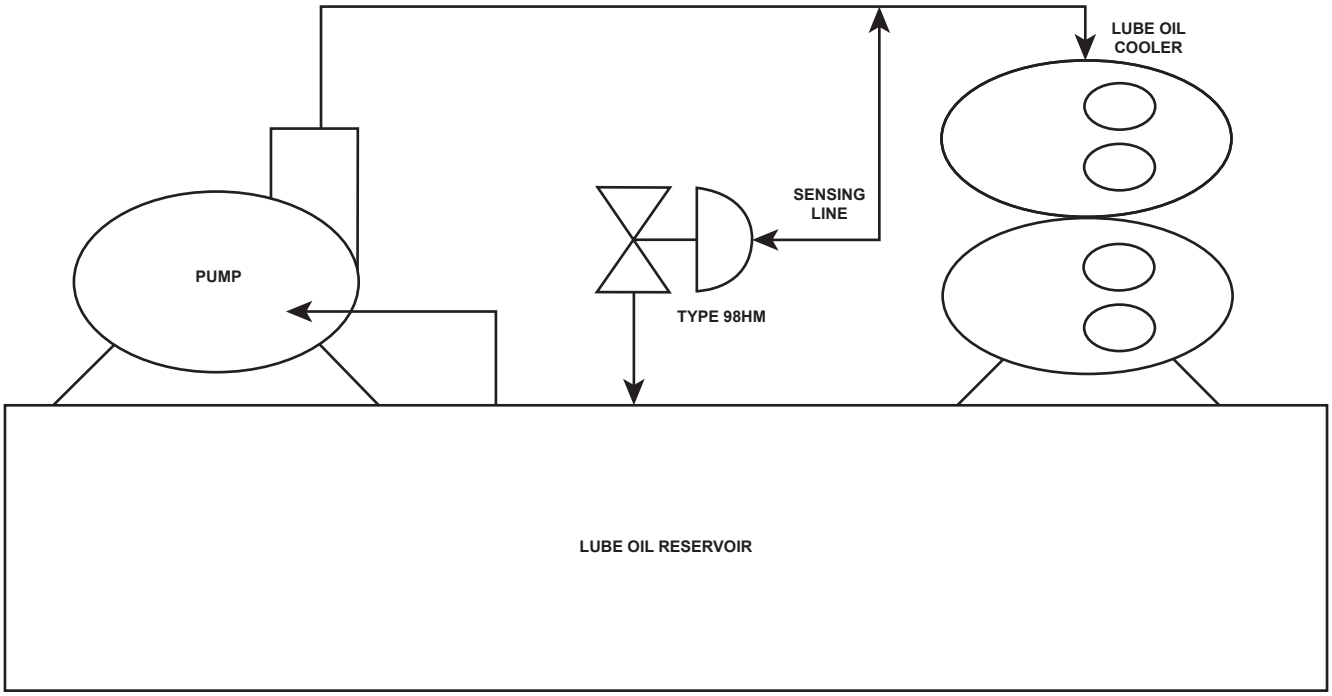

Figure 6. *Type 98HM Used in a Typical Bypass Application*

Webadmin.Regulators@emerson.com
Fisher.com
Facebook.com/EmersonAutomationSolutions
LinkedIn.com/company/emerson-automation-solutions
Twitter.com/emr_automation

Emerson Automation Solutions

Americas
McKinney, Texas 75070 USA
T +1 800 558 5853
+1 972 548 3574

Europe
Bologna 40013, Italy
T +39 051 419 0611

Asia Pacific
Singapore 128461, Singapore
T +65 6777 8211

Middle East and Africa
Dubai, United Arab Emirates
T +971 4 811 8100

EMERSON™