Fisher™ V280 Full-Bore Ball Control Valve

The Fisher V280 is a three-piece, trunnion mounted, full-bore control valve capable of handling full ASME CL900 pressure drops. It is designed with features for optimized pressure, flow, and process control. An optional drilled attenuator controls noise and vibration from high pressure drop liquids and gases. The splined shaft connection to the actuator reduces lost motion.

The V280 with an Aerodome attenuator is used in gas service to reduce noise in demanding applications such as anti-surge, station recycle and worker/monitor applications.

The V280 with a Hydrodome attenuator provides improved performance for demanding applications such as pump bypass or pipeline take-off. The trim is designed for liquid service to help eliminate or reduce cavitation associated with pipeline noise and vibration.

The V280 without attenuation is designed for automated control in bypass, batch, monitor, and emergency shutoff service applications. It presents little or no restriction to flow.

Unless otherwise noted, all NACE references are to NACE MR0175/ISO 15156.



Fisher V280 Valve

Features

- **Thoroughly Tested**—Valve construction cycle tested and flow tested in laboratory subject to full ASME CL900 pressure drops to maximize service life.

- **Excellent Flow Control**—Robust drive train designed to guide the shaft and properly absorb energy during dynamic operation.

- **Aerodynamic Performance**—Up to -20 dBA acoustical attenuation can be achieved for the V280 with Aerodome within a single stage construction. Dual-stage construction can provide up to -25 dBA attenuation.

- **Sour Service and Sour Crude Oil Capability**—Standard construction materials comply with NACE MR0175/ISO 15156.

- **Heavy Duty Trunnion**—The ball trunnions are designed for demanding applications requiring long service life, with a reduction in maintenance time and costs.

- **Broad Hydrodynamic Applications**—Single and dual stage attenuators for the V280 with Hydrodome may be provided for a varying range of applications. A KC value of 1.0 is achievable depending on service conditions.

- **Flexible Applications**—The attenuator is active throughout the ball rotation for very demanding services. The characterized attenuator can be utilized when more flow capacity is necessary.

Features (continued on 3)

Specifications

Valve Sizes and End Connection Styles

NPS ■ 6, ■ 8, ■ 10, ■ 12, and ■ 16 flanged valve size with CL900 raised-face flanges compatible with ASME B16.5. Consult your Emerson sales office for other end connection styles

Maximum Inlet Pressure and Temperatures(1)

Consistent with CL900 pressure-temperature ratings per ASME B16.34

Maximum Allowable Shutoff Pressure Drop(1)

For Single-Seal and Dual-Seal Construction (except where further limited by pressure-temperature rating of the valve body):

POM Seal: 153.2 bar (2220 psig) at 38°C (100°F)
TCM Ultra Seal: 120 bar (1750 psig) at 38°C (100°F)

Shutoff Classifications

Single or Dual-Seal Construction

Class IV standard: ANSI/FCI 70-2 and IEC 65034-4
Class VI optional: ANSI/FCI 70-2 and IEC 65034-4

Flow Characteristic

■ Modified linear with single high-density attenuator

■ Modified equal percentage with single characterized attenuator

■ Modified equal percentage without attenuator

Flow and Shutoff Direction

Unidirectional flow is forward flow. Seal is upstream

Single Seal Construction: Should be used for unidirectional flow and unidirectional shutoff only

Dual Seal Construction: V280 with Aerodome and unattenuated V280 may be used for unidirectional and bidirectional flow

V280 with Hydrodome should be used for unidirectional flow only for effective anti-cavitation protection. Bidirectional shutoff requires dual seal construction

Flow Coefficients

See Fisher Catalog 12

Seal Material and Temperature Capabilities(1)

Standard: POM (polyoxymethylene) -29 to 82°C (-20 to 180°F)
Optional: POM (polyoxymethylene) with Nitrile MoS_2 Impregnated O-rings -46 to 82°C (-50 to 180°F) or PTFE/PEEK(2) with flurorocarbon O-rings -23 to 204°C (-10 to 400°F)

Maximum Ball Rotation

90°

Actuator Mounting

Right-hand or left-hand mounted as viewed from the valve inlet from forward flow

Packing Arrangements

PTFE Packing: Standard construction
ENVIRO-SEAL™ Packing: This optional packing system provides improved sealing, guiding, and transmission of leading force to control liquid and gas emissions

Dimensions

See figure 3

Options

■ Double block-and-bleed applications (Dual seal construction is required)
■ Two or three-stage Aerodome attenuator, two-stage or three-stage Hydrodome attenuator
■ Ring type joint flanges
■ Inconel drive shaft
■ Keyed shaft
■ Nitrile MoS_2 Impregnated O-rings
■ S31600 SST ENC ball
■ PTFE/PEEK seal insert
■ Contact your Emerson sales office for other options

1. The pressure or temperature limits in this bulletin and any applicable standard or code limitation for this valve should not be exceeded.
2. PTFE stands for Polytetrafluoroethylene and PEEK stands for PolyEtherEtherKetone.

Features (continued)

- Construction Versatility—Seal and dome attenuators are interchangeable. The valve construction can be altered by adding/removing a dome attenuator and/or seal without requiring a different body flange. This allows for flexibility to meet changing demands. See figure 2.

- Base Bracket—Standard easy-removal base bracket simplifies maintenance and storage prior to installation. The base bracket is designed to remain secured to the valve body during removal of the body flanges for maintenance.

- Integral Valve Lifting Provision—Valve body includes standard tapped holes for easy attachment of swivel hoist rings or other appropriate rigging equipment.

- Tight Shutoff—Self-adjusting seal(s) that are pressure assisted provide tight shutoff for long reliable service. The design incorporates a heavy duty S31600 stainless steel carrier that retains the composition seal for full-rated pressure drop service.

- Improved Service Life—The attenuator is not part of the seal assembly. The seal wipes the ball surface, not the attenuator, promoting increased service life.

Table 1. Fisher V280 Standard Materials of Construction

PART	MATERIAL
Valve Body	LF2 Carbon Steel
Ball	Carbon Steel ENC
Seal	POM with S31600 SST Seal Blank
Drive Shaft	S17400 SST H1150D
Dome Attenuator	S17400 SST
Wave Spring	N07750
Retaining Ring	N07750
Tailpiece	LF2 Carbon Steel
Tailpiece Mounting Bolting	B7M Steel
Bearing Plate	Carbon Steel
Bearings	N04400 with PTFE
Thrust Washer	Carbon filled PTFE
Packing Box Housing	Carbon Steel
Packing	PTFE/Carbon filled PTFE
Packing Bolting	B7M Steel
Packing Follower, Packing Box Ring	Annealed S31600 SST
Groove Pins	S31600
O-Rings	Nitrile
Actuator Mounting Bolting	Steel Grade 5

Figure 1. V280 with Dual Seal and Single Dome Attenuator

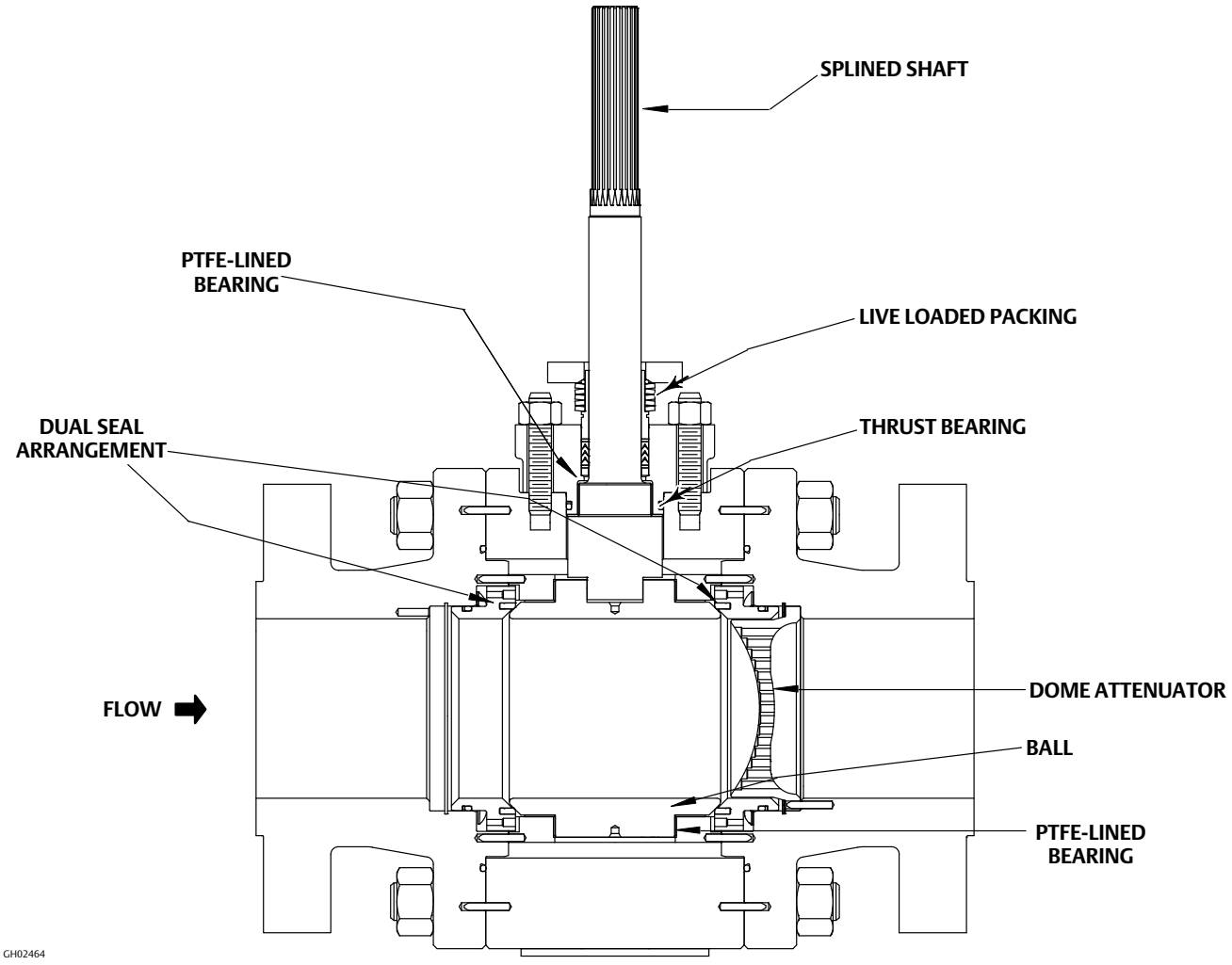

Figure 2. Construction Versatility Seal/Dome Assembly Details

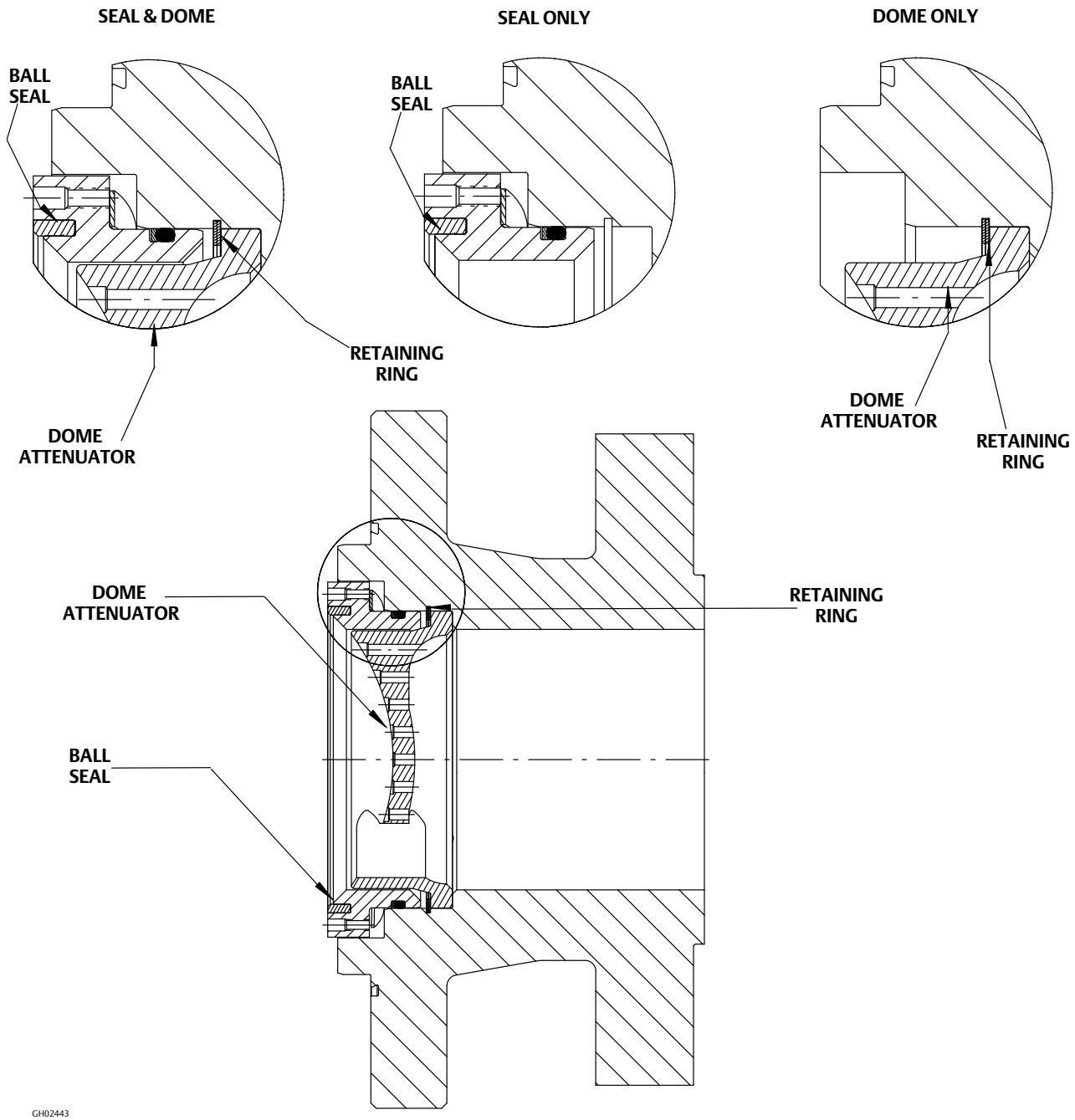

Figure 3. V280 Envelope Dimensions

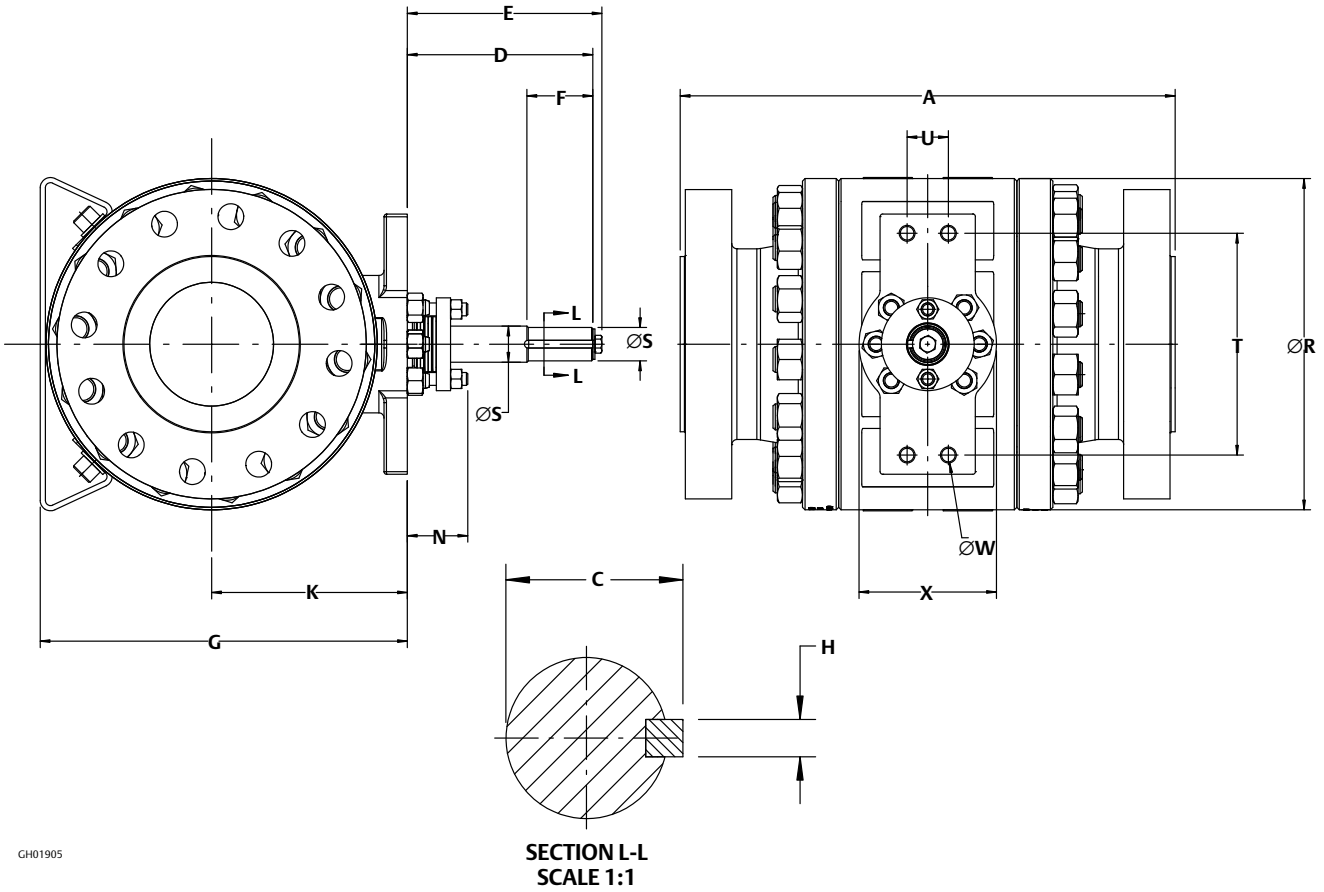

Table 2. V280 Envelope Dimensions (see figure 3)

Valve Size, NPS	Pressure Class	∅Bore	A	K	G	ØR	ØS			V	U	ØW (Threaded)	Approximate Weight
							Shaft Dia.	Spline Dia.	Keyway Dia.				
		mm											kg
6	900	152	610	241	452	409	44.4	38.1	41.2	273	51	See Below	415
8		203	737	300	561	508	63.5	50.8	57.1	337	76		753
10		254	838	343	648	597							1143
12		305	965	434	798	705	76.2	71.1	69.8	533	127		1823
16		374	1130	503	937	851							2885
		Inches											lbs
6	900	6.00	24.00	9.50	17.80	16.10	1.75	1.50	1.625	10.75	2.00	3/4-10	915
8		8.00	29.00	11.80	22.10	20.00	2.50	2.00	2.25	13.25	3.00	7/8-9	1660
10		10.00	33.00	13.50	25.50	23.50							2520
12		12.00	38.00	17.10	31.40	27.75	3.00	2.80	2.75	21.00	5.00	1-1/4-8	4020
16		14.71	44.50	19.80	36.90	33.50							6360

Table 3. V280 Envelope Dimensions (see figure 3) (cont.)

Valve Size, NPS	Pressure Class	D		E	F		C	H	N	X
		Splined Shaft	Keyed Shaft	Keyed Shaft	Splined Shaft	Keyed Shaft	Shaft & Key Height	Key Width	Packing Nut Removal Clearance	Flange Width
		mm								
6	900	356	229	243	155	80	45.2	9.52	96	169
8			297	312		95	62.4	12.70	109	191
10										
12		508	394	408	264	111	76.7	15.87	134	244
16										
		Inches								
6	900	14.00	9.00	9.60	6.12	3.13	1.78	0.375	3.81	6.66
8			11.70	12.30		3.75	2.46	0.500	4.31	7.50
10										
12		20.00	15.50	16.10	10.38	4.38	3.02	0.625	5.31	9.62
16										

Figure 4. Dead Angle (also see table 4)

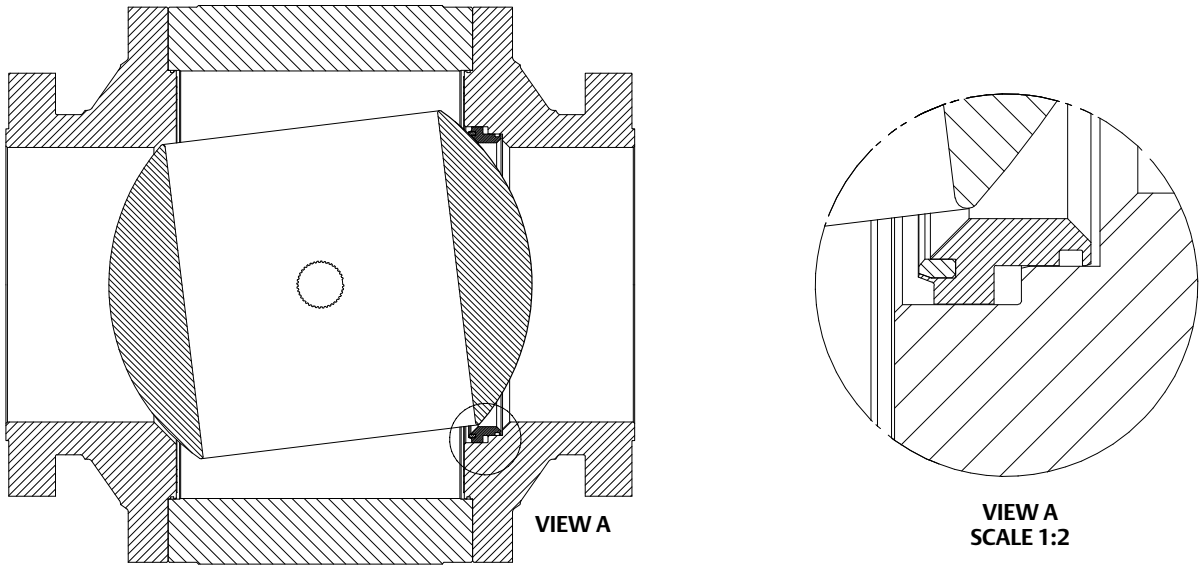

Table 4. Dead Angle Degrees

VALVE SIZE, NPS	DEAD ANGLE, DEGREES
6	10
8	9
10	9
12	9
16	10

Neither Emerson, Emerson Automation Solutions, nor any of their affiliated entities assumes responsibility for the selection, use or maintenance of any product. Responsibility for proper selection, use, and maintenance of any product remains solely with the purchaser and end user.

Fisher and ENVIRO-SEAL are marks owned by one of the companies in the Emerson Automation Solutions business unit of Emerson Electric Co. Emerson Automation Solutions, Emerson, and the Emerson logo are trademarks and service marks of Emerson Electric Co. All other marks are the property of their respective owners.

The contents of this publication are presented for informational purposes only, and while every effort has been made to ensure their accuracy, they are not to be construed as warranties or guarantees, express or implied, regarding the products or services described herein or their use or applicability. All sales are governed by our terms and conditions, which are available upon request. We reserve the right to modify or improve the designs or specifications of such products at any time without notice.

Emerson Automation Solutions
Marshalltown, Iowa 50158 USA
Sorocaba, 18087 Brazil
Cernay, 68700 France
Dubai, United Arab Emirates
Singapore 128461 Singapore

www.Fisher.com

© 2019, 2021 Fisher Controls International LLC. All rights reserved.