Fisher™ Vee-Ball™ V200U Rotary Control Valve

This bulletin provides details on the DN 25 through DN 250 (NPS 1 through NPS 10) Fisher Vee-Ball V200U rotary control valves. The V200U is a flangeless design that offers many of the favorable traits of the proven V150, V200, and V300 Series B Vee-Ball valves with the added feature of a reduced, compact face-to-face dimension design. The contoured segmented V-Notch ball promotes smooth, nonclogging operation and provides a shearing action between ball and the durable HD metal seal. The unrestricted straight-through flow design provides efficient, high capacity for gas, steam, liquids, and fibrous slurries.

The flangeless V200U is capable of interfacing with EN 1092-1 Type B or ASME B16.5 raised face flanges.

The splined or square drive shaft options connect to a variety of rotary-shaft actuator designs to provide reliable, high-performance throttling or on-off operation for many different applications in the process industries.



X1712

Fisher DN200 (NPS 8) V200U Vee-Ball Valve with 2052 Actuator and FIELDVUE™ DVC6200 Digital Valve Controller



X1710

Fisher DN80 (NPS 3) V200U Vee-Ball Valve with Bettis™ RPE Actuator and FIELDVUE DVC2000 Digital Valve Controller

Features

- Excellent Flow Control—Precise contouring of the Vee-Ball provides a modified equal percentage flow characteristic.
- Smooth Valve Operation—Precision machined parts, pressure-balanced seal, and low friction bearing designs allow smooth, precise movement of the ball.
- Long Service Life—The durable HD metal seal construction provides long service life in demanding applications. The constant wiping action of the seal across the ball's sealing surface provides excellent service on high consistency fibrous slurry applications.
- Line Centering Geometry—Cast or machined features on the body outside diameter align and center the valve within the mating pipeline flange bolting to ensure optimum performance.
- Trim Versatility—The V200U drive train components are interchangeable with existing V150, V200, and V300 Series B valves. This feature allows you to reduce your spare parts inventory and maintenance procedures.

Specifications

Valve Sizes

DN ■ 25 ■ 40 ■ 50 ■ 80 ■ 100 ■ 150 ■ 200 ■ 250

NPS ■ 1 ■ 1-1/2 ■ 2 ■ 3 ■ 4 ■ 6 ■ 8 ■ 10

Mates with EN1092-1 PN10-40 Type B raised-face flanges and ASME B16.5 CL150/CL300 raised-face flanges (see table 1)

Maximum Inlet Pressures(1)

Consistent with pressure-temperature ratings per EN12516-1 and ASME B16.34 as shown in table 1, but do not exceed the material temperature capabilities shown below or the pressure drop limitations shown in table 4

Maximum Shutoff Pressure/Temperature Ratings(1)

HD (Heavy Duty) Metal Ball Seals and PEEK/PTFE Bearings: See table 4

Shutoff Classification(1)

HD (Heavy Duty) Metal Ball Seal (Bidirectional Flow): 0.01% of valve capacity; Class IV per ANSI/FCI 70-2 and IEC 60534-4; Maximum allowable pressure drop in reverse flow is 6.9 bar (100 psi)

Construction Materials

See table 3

Temperature Capabilities(1)

HD Metal Seals: -46 to 288°C (-50 to 550°F)
PEEK/PTFE Bearings: -198 to 260°C (-325 to 500°F)

Packing Constructions

PTFE V-ring: -46 to 232°C (-50 to 450°F)
ENVIRO-SEAL™ Single PTFE V-ring: -46 to 232°C (-50 to 450°F)

Flow Characteristic

Modified equal percentage

Dimensions

See table 6 and 7 for dimensions

Standard Flow Direction

Forward (into the convex face of the V-notch ball)

Maximum Ball Rotation

90 degrees

Flow Coefficients

See Fisher Catalog 12

Actuator Sizing

See Catalog 14, section D for torque sizing factors. Use the inlet NPS of the V200U to determine appropriate factors from the Vee-Ball tables

Actuator Mounting

Standard actuator mounting is on the right-hand side, as viewed from the valve inlet, with the shaft horizontal. Actuator can be mounted in any of four quadrants. Left-hand actuator mounting is available upon request

Valve/Actuator Action

For right-hand mount actuator, the standard ball design and actuator action is counter-clockwise to close (CCW). The ball will rotate to the top of the valve body when open for a horizontal pipe run with the valve shaft positioned horizontal. ■ Left-hand actuator mounting with CCW action is an option.

Left-hand actuator mounting with a special clockwise to close (CW) ball design and actuator action is also available to allow the ball to rotate to the top of the valve body for a horizontal pipe run with the valve shaft positioned horizontal.

With diaphragm or piston rotary actuator, field-reversible between:■ push-down-to-close (PDTC) (extending actuator rod closes valve) and ■ push-down-to-open (PDTO) (extending actuator rod opens valve.)

Approximate Weight

See table 2

Options

ENVIRO-SEAL packing system

1. The pressure/temperature limits in this bulletin, and any applicable code or standard limitation, should not be exceeded.

Features (continued)

- Structural Integrity—One-piece valve body ensures structural integrity of the pressure boundary by eliminating leak paths that could be caused by the gaskets in two-piece, bolted valve designs.
- Sour Service Capability—Materials are available for applications involving sour liquids and gases. These constructions comply with NACE MR0175-2002, MR0175-2003, MR0103, and MR0175/ISO 15156.
- Exceptional Environmental Capabilities—The optional ENVIRO-SEAL packing systems are designed with very smooth shaft surfaces and live loading to provide exceptional sealing. The seal of the ENVIRO-SEAL system can restrict emissions to less than the Environmental Protection Agency (EPA) limit of 100 parts per million (ppm).
- Compact Face-to-Face Dimension Design—Refer to table 5.

Table 1. Valve Body Materials, End Connections, and Ratings

VALVE BODY MATERIAL	VALVE SIZE, DN	VALVE SIZE, NPS	FLANGELESS VALVE END CONNECTION COMPATIBILITY					
			ASME B16.5		EN1092-1			
			Raised Face Flange		Type B Raised Face Flange			
			CL150	CL300	PN10	PN16	PN25	PN40
EN 1.4408/CF8M	25	1	X	X	X	X	X	X
	40	1-1/2	X	X	X	X	X	X
	50	2	X	X	X	X	X	X
	80	3	X	X	X	X	X	X
	100	4	X	X	X	X	X	X
	150	6	X	X	X	X	X	X
	200	8	X	X	X	X	X	X
	250	10	X	X	X	X	X	X

Table of Contents

Features 1
Specifications 2
Tables
Valve Body Material, End Connections, and Ratings . 3
Approximate Weights 3
Standard Construction Materials 3
Maximum Allowable Shutoff Pressure Drop 5
Dimensions 6

Table 2. V200U Approximate Weights

VALVE SIZE			WEIGHT	
DN	NPS	Rating EN PN (ASME)	kg	lbs
25	1	CL150/300	3	7
		PN10-40		
40	1-1/2	CL150/300	5	10
		PN10-40		
50	2	CL150/300	6	13
		PN10-40		
80	3	CL150	8	18
		CL300	10	22
		PN10-40	9	19
100	4	CL150/300	13	28
		PN10/16	12	26
		PN25/40	13	28
150	6	CL150/300	27	58
		PN10-40		
200	8	CL150/300	49	109
		PN10/16		
		PN25/40		
250	10	CL150	64	140
		CL300	102	225
		PN10/16	64	140
		PN25/40	71	156

Table 3. V200U Standard Construction Materials

PART	MATERIAL
Valve Body	CF8M / EN 1.4408 Dual Certified
V-Notch Ball	CF3M / Chrome Plate
Seal — Heavy Duty Metal	CF8M with CoCr-A Hard Facing Alloy
Seal Protector Ring(1)	CF8M / EN 1.4408 Dual Certified
Wave Spring	N07750
Radial Seal	Graphite reinforced PTFE
Bearings	PEEK/Carbon-filled PTFE liner(2)
Packing	PTFE V-ring with one carbon-filled PTFE ring(3)
Shaft	S20910
Groove Pin	S31600
Taper Key	S20910
Taper Pin (DN 25, 40, and 50 (NPS 1, 1-1/2, and 2)) only	S20910
Seal Protector Ring Gasket(1)	Laminated Graphite
Packing Follower and Packing Box Ring	CF8M
Packing Follower Bolting	Strain hardened B8M stainless steel
Actuator Mounting Bolting	Strain hardened B8M stainless steel

1. For DN 25 through DN 100 (NPS 1 through NPS 4) constructions only.
2. PEEK is poly-ether-ketone.
3. The carbon-filled PTFE ring is used for grounding.

Figure 1. Fisher V200U Construction Features, DN 25, 40, and 50 (NPS 1, 1-1/2, and 2) HD Ball Seal

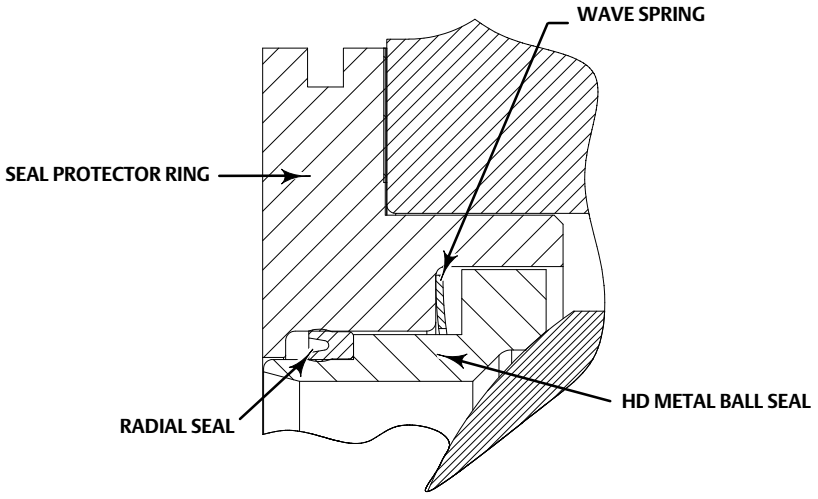

Figure 2. Fisher V200U Construction Features, DN 80 through DN 100 (NPS 3 and 4)

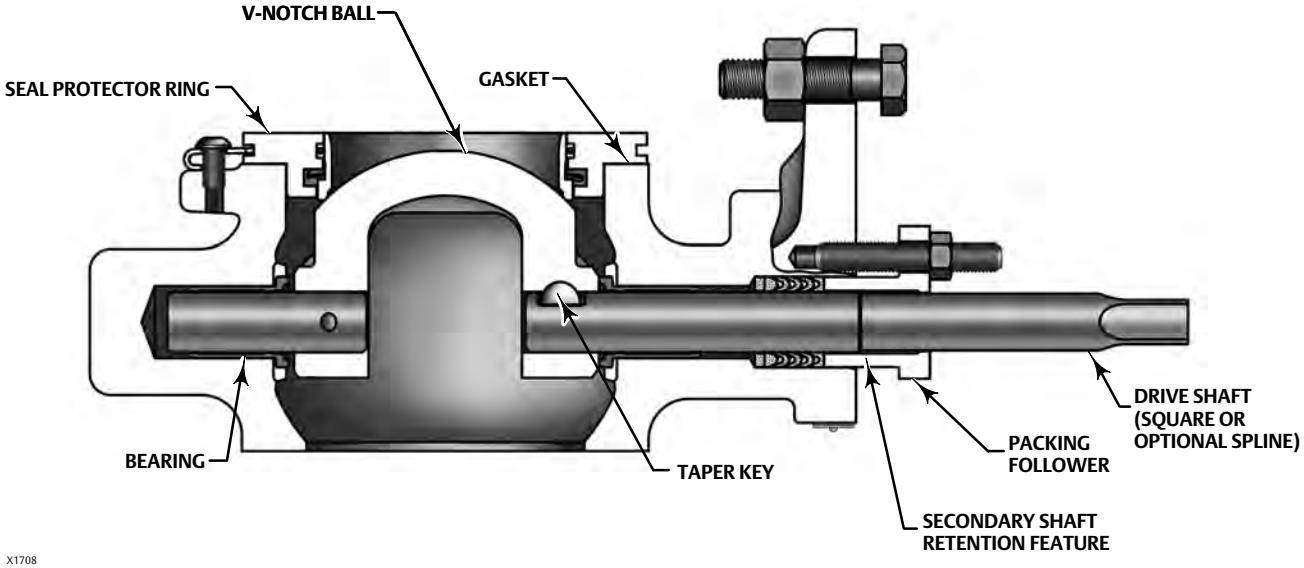

Figure 3. Fisher V200U Construction Features, DN 150 through DN 250 (NPS 6 through 10)

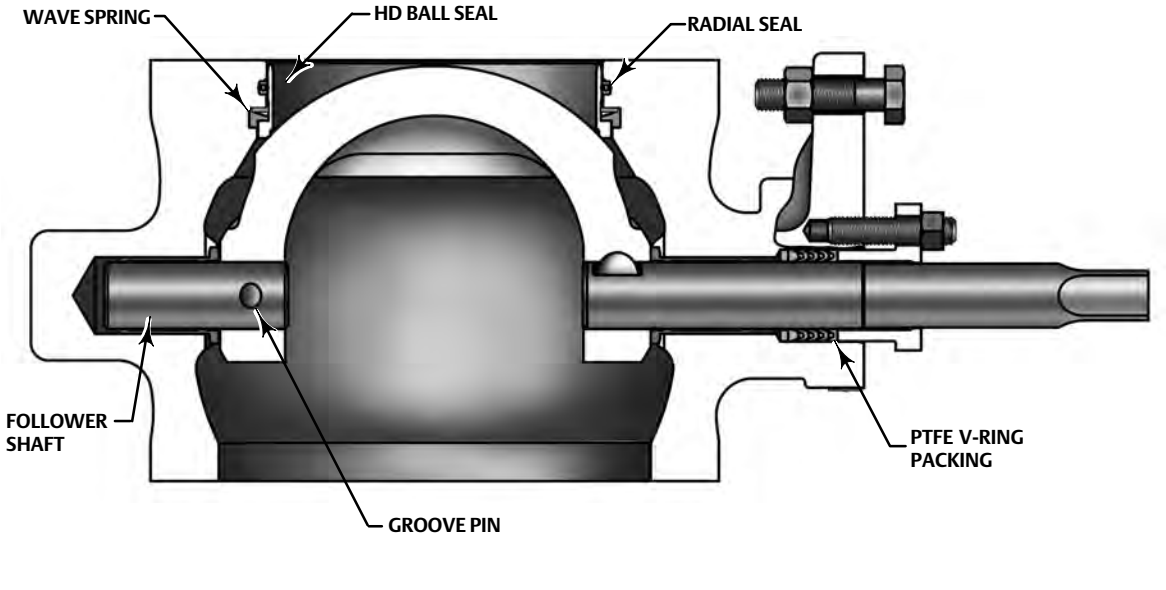

Figure 4. Optional ENVIRO-SEAL Packing Arrangements

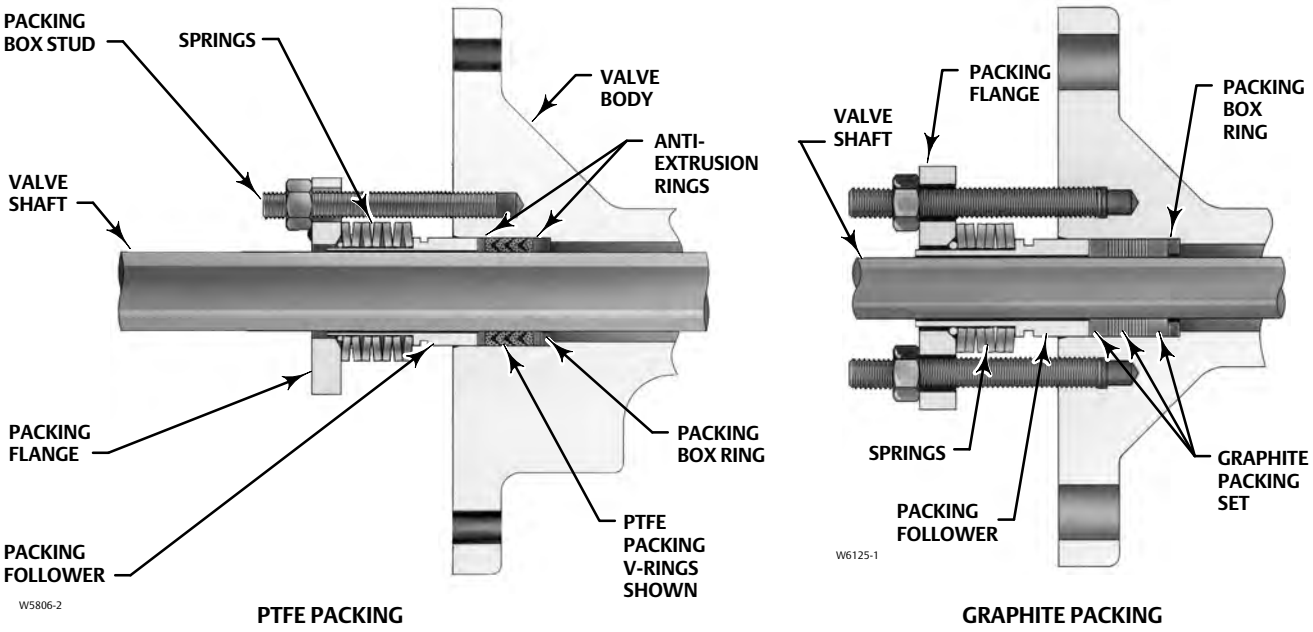

Table 4. Maximum Allowable Shutoff Pressure Drops based on Trim (PEEK Bearing and HD Seal) and EN Pressure Temperature Rating of the Valve Material CF8M/1.4408

BEARING MATERIAL	BALL SEAL	TEMPERATURE RANGE, °C	VALVE SIZE, DN										
			25	40	50	80	100		150	200		250	
			PN 10-40	PN 10-40	PN 10-40	PN 10-40	PN 10/16	PN 25/40	PN 10-40	PN 10/16	PN 25/40	PN 10/16	PN 25/40
			Bar										
PEEK/PTFE	HD Metal (CF8M with CoCr-A hard Facing Alloy)(1)	-10 to 50	40.0	40.0	40.0	40.0	16.0	40.0	40.0	16.0	40.0	16.0	40.0
		100	38.1	38.1	38.1	38.1	15.2	38.1	38.1	15.2	38.1	15.2	38.1
		150	34.2	34.2	34.2	34.2	13.7	34.2	34.2	13.7	34.2	13.7	34.2
		200	30.2	30.2	30.2	30.2	12.1	30.2	30.2	12.1	30.2	12.1	30.2
		250	28.0	28.0	28.0	28.0	11.2	28.0	28.0	11.2	28.0	11.2	28.0
BEARING MATERIAL	BALL SEAL	TEMPERATURE RANGE, °F	VALVE SIZE, DN										
			25	40	50	80	100		150	200		250	
			PN 10-40	PN 10-40	PN 10-40	PN 10-40	PN 10/16	PN 25/40	PN 10-40	PN 10/16	PN 25/40	PN 10/16	PN 25/40
			PSI										
PEEK/PTFE	HD Metal (CF8M with CoCr-A hard Facing Alloy)(1)	14 to 122	580	580	580	580	232	580	580	232	580	232	580
		212	552	552	552	552	220	552	552	220	552	220	552
		302	496	496	496	496	199	496	496	199	496	199	496
		392	438	438	438	438	175	438	438	175	438	175	438
		482	406	406	406	406	162	406	406	162	406	162	406

1. Pressure drops for HD seals are for forward flow only. For reverse flow with HD metal seal limit pressure drop to 6.9 bar (100 psi).

Table 5. Maximum Allowable Shutoff Pressure Drops based on Trim (PEEK Bearing and HD Seal) and ASME Pressure Temperature Rating of the Valve Material CF8M/1.4408

BEARING MATERIAL	BALL SEAL	TEMPERATURE RANGE, °C	VALVE SIZE, NPS									
			1	1-1/2	2	3		4	6	8	10	
			CL150/300	CL150/300	CL150/300	CL150	CL300	CL150/300			CL150	CL300
			Bar									
PEEK/PTFE	HD Metal (CF8M with CoCr-A hard Facing Alloy)(1)	-46 to 38	49.6	49.6	49.6	19.0	49.6	49.6	49.6	49.6	19.0	40.9 (2)
		93	42.7	42.7	42.7	16.2	42.7	42.7	42.7	42.7	16.2	40.9 (2)
		149	38.6	38.6	38.6	14.8	38.6	38.6	38.6	38.6	14.8	38.6
		204	35.5	35.5	35.5	13.4	35.5	35.5	35.5	35.5	13.4	35.5
		232	34.5	34.5	34.5	12.8	34.5	34.5	34.5	34.5	12.8	34.5
		260	33.1	33.1	33.1	11.7	33.1	33.1	33.1	33.1	11.7	33.1
BEARING MATERIAL	BALL SEAL	TEMPERATURE RANGE, °F	VALVE SIZE, NPS									
			1	1-1/2	2	3		4	6	8	10	
			CL150/300	CL150/300	CL150/300	CL150	CL300	CL150/300			CL150	CL300
			PSI									
PEEK/PTFE	HD Metal (CF8M with CoCr-A hard Facing Alloy)(1)	-50 to 100	720	720	720	275	720	720	720	720	275	593 (2)
		200	620	620	620	235	620	620	620	620	235	593 (2)
		300	560	560	560	215	560	560	560	560	215	560
		400	515	515	515	195	515	515	515	515	195	515
		450	500	500	500	185	500	500	500	500	185	500
		500	480	480	480	170	480	480	480	480	170	480

1. Pressure drops for HD seals are for forward flow only. For reverse flow with HD metal seal limit pressure drop to 6.9 bar (100 psi).
2. Maximum allowable shutoff pressure drop limited by trim.

Table 6. Fisher V200U Dimensions(1)

VALVE SIZE, DN	A	B	G	K	M(4)		P(2)		R	T	U	W
					PN 10/16	PN 25/40	PN 10/16	PN 25/40				
	mm											
25	50	32	62	95	150	150	---	---	66			
40	60	37	78	121	175	175	---	---	84	177	---	14.4
50	75	46	95	127	200	200	---	---	104			
80	100	59	112	130	225	240	---	---	127			14.2
100	116	68	127	141	250	270	103	104	158	152	32	14.2
150	160	89	154	164	310	340	---	---	216			17.5
200	200	124	189	232	355	405	188	190	270	235	46	17.5
250	240	147	216(3)	261	410	470	253	253	324			
VALVE SIZE, NPS	A	B	G	K	M(4)		P(2)		R	T	U	W
					CL150	CL300(5)	CL150	CL300				
	Inch											
1	1.97	1.25	2.44	3.75	4.75	5.25	---	---	2.61			
1-1/2	2.36	1.47	3.08	4.75	5.50	6.25	---	---	3.31	4.62	---	0.56
2	2.95	1.82	3.75	5.00	6.50	6.75	---	---	4.08			
3	3.94	2.34	4.40	5.12	8.00	8.50	---	---	5.00			0.56
4	4.58	2.67	5.00	5.55	8.75	9.50	3.90	3.90	6.19	5.98	1.25	0.56
6	6.30	3.52	6.06	6.46	10.75	11.75	---	---	8.50			0.69
8	7.87	4.89	7.44	9.11	12.75	14.00	7.40	7.40	10.63	9.25	1.81	0.69
10	9.45	5.78	8.50(3)	10.26	14.75	16.25	9.53	9.33	12.76			

1. Select the appropriate valve based on the pressure class of your pipe flanges as some multi-class valves are not interchangeable because of line bolting requirements.
2. Minimum internal diameter of the mating pipe or flange required for Vee-Ball clearance.
3. 221 mm (8.69 inches) for NPS 10, CL300 valves.
4. Clearance necessary to remove the bolt.
5. The NPS 10 CL300 construction requires 4 bolts per side (8 total) to be installed in blind, tapped holes on the valve body. The M value for these 1-8 UNC fasteners is 140 mm (5.5 inch).

Figure 5. Fisher V200U Dimensions with Square and Spline Shaft (also see tables 6 and 7)

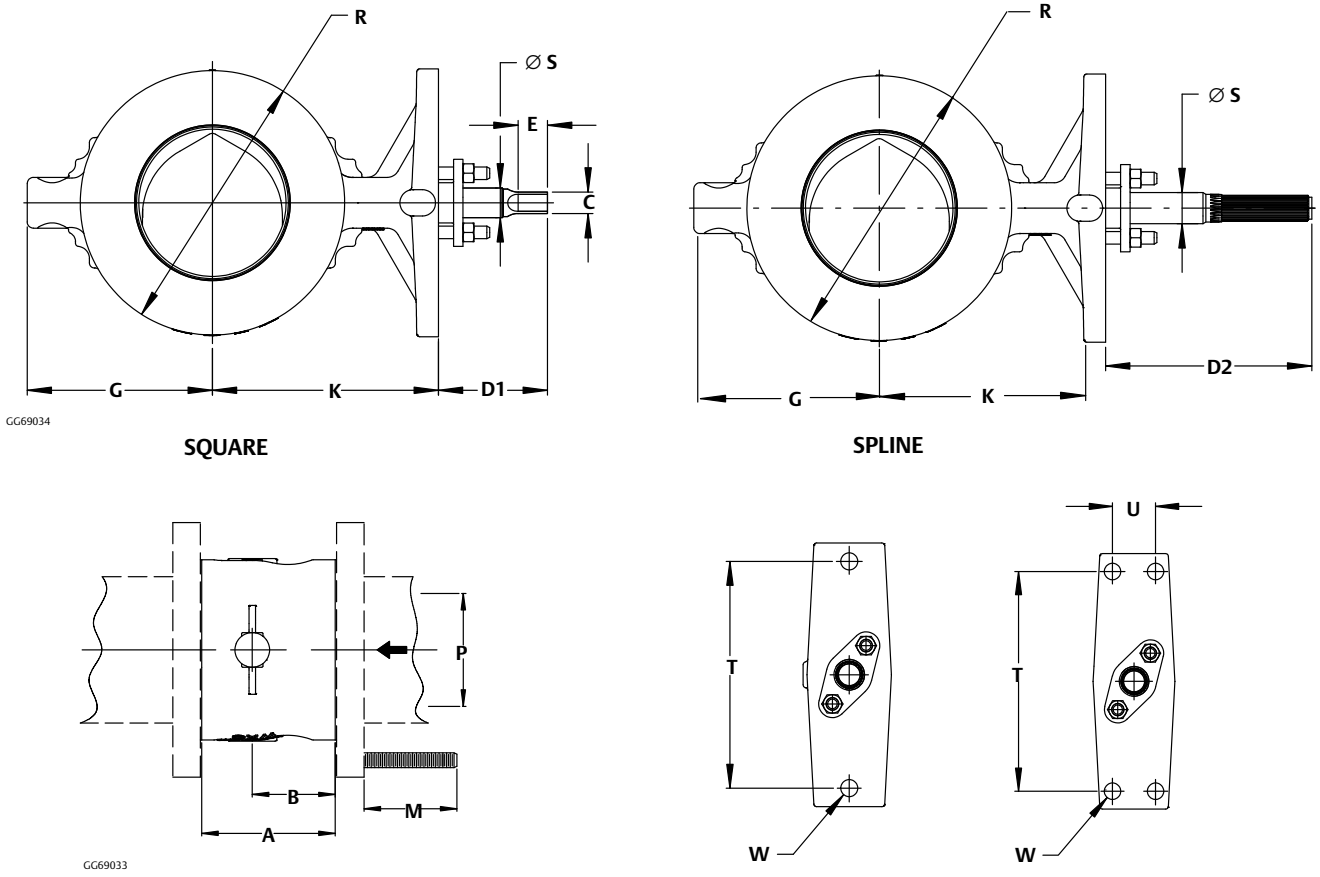

Table 7. Fisher V200U Shaft Dimensions

VALVE SIZE/ PRESSURE RATING		S(1)		SQUARE						SPLINE	
				C		D1		E		D2	
DN	NPS	mm	Inches	mm	Inches	mm	Inches	mm	Inches	mm	Inches
DN25/ PN10-40	NPS 1 CL150-300	12.7	0.5	9.0	0.4	74.0	2.91	16.0	0.63	187	7.38
DN40/ PN10-40	NPS 1-1/2 CL150-300	15.9	0.625	11.0	0.4	76.0	2.99	15.0	0.59	187	7.38
DN50/ PN10-40	NPS 2 CL150-300	15.9	0.625	11.0	0.4	76.0	2.99	15.0	0.59	187	7.38
DN80/ PN10-40	NPS 3/ CL150-300	19.1	0.75	14.0	0.6	103.0	4.06	19.0	0.75	214	8.44
DN100/ PN10-40	NPS 4/ CL150-300	19.1	0.75	14.0	0.6	103.0	4.06	19.0	0.75	214	8.44
DN150/ PN10-40	NPS 6/ CL150-300	25.4	1.00	19.0	0.8	108.0	4.25	25.0	0.94	214	8.44
DN200/ PN10-40	NPS 8/ CL150-300	31.8	1.25	22.0	0.9	109.0	4.29	30.0	1.18	208	8.19
DN250/ PN10-40	NPS 10/ CL150-300	31.8	1.25	22.0	0.9	109.0	4.29	30.0	1.18	208	8.19

1. This nominal Valve Shaft Diameter is the shaft diameter through the packing box. Use this diameter when selecting Fisher actuators.

Neither Emerson, Emerson Automation Solutions, nor any of their affiliated entities assumes responsibility for the selection, use or maintenance of any product. Responsibility for proper selection, use, and maintenance of any product remains solely with the purchaser and end user.

Fisher, Bettis, Vee-Ball, FIELDVUE, and ENVIRO-SEAL are marks owned by one of the companies in the Emerson Automation Solutions business unit of Emerson Electric Co. Emerson Automation Solutions, Emerson, and the Emerson logo are trademarks and service marks of Emerson Electric Co. All other marks are the property of their respective owners.

The contents of this publication are presented for informational purposes only, and while every effort has been made to ensure their accuracy, they are not to be construed as warranties or guarantees, express or implied, regarding the products or services described herein or their use or applicability. All sales are governed by our terms and conditions, which are available upon request. We reserve the right to modify or improve the designs or specifications of such products at any time without notice.

Emerson Automation Solutions
Marshalltown, Iowa 50158 USA
Sorocaba, 18087 Brazil
Cernay, 68700 France
Dubai, United Arab Emirates
Singapore 128461 Singapore

www.Fisher.com

© 2020, 2021 Fisher Controls International LLC. All rights reserved.