Types 634 and 634M High-Pressure Shutoff Valves



TYPE 634M SHUTOFF VALVE WITH
STANDARD PIPE PLUGS IN BODY SIDE TAPPINGS

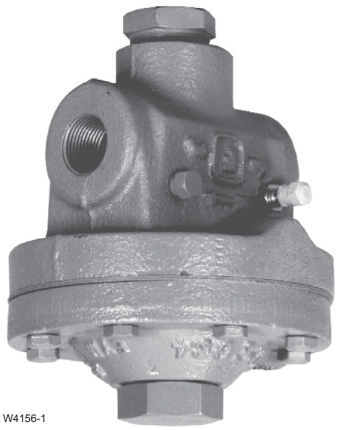

TYPE 634 SHUTOFF VALVE WITH
OPTIONAL TANK VALVE IN UPSTREAM BODY SIDE TAPPING

Figure 1. *Typical Constructions*

WARNING

Failure to follow these instructions or to properly install and maintain this equipment could result in an explosion, fire and/or chemical contamination causing property damage and personal injury or death.

Fisher™ shutoff valve must be installed, operated and maintained in accordance with federal, state and local codes, rules and regulations and Emerson Process Management Regulator Technologies, Inc. instructions.

If a leak develops or if the outlet continually vents gas, service to the unit may be required. Failure to correct trouble could result in a hazardous condition. Only a qualified person shall install or service the unit.

Call a qualified service person to service the unit. Installation, operation and maintenance procedures performed by unqualified person may result in improper adjustment and unsafe operation. Either condition may result in equipment damage or personal injury. Only a qualified person must install or service the Types 634 and 634M shutoff valves.

Introduction

Scope of the Manual

This manual provides installation, maintenance, and parts information for the Types 634 and 634M high-pressure shutoff valves. Refer to separate instruction manuals for information on regulators used with these high-pressure shutoff valves.

Product Description

Types 634 and 634M high-pressure shutoff valves (Figure 1) serve to provide overpressure protection by containment. The Type 634 shutoff valve with internal registration is installed between a pressure-reducing

Specifications

The Specifications section on this page provides the ratings and other specifications for the Types 634 and 634M. Factory specifications such as type, maximum inlet pressure, maximum temperature, maximum outlet pressure, spring range and orifice size are stamped on the nameplate fastened on the regulator at the factory. The manufacture date and original fracture disk range are printed on the disk retainer (key 3, Figure 6).

Body Size and End Connection Style
3/4 or 1 NPT internal

Maximum Inlet Pressure(1)
1500 psig / 103 bar

Maximum Body Outlet Pressure(1)
Type 634 Shutoff Valve: 150 psig / 10.3 bar
Type 634M Shutoff Valve: 1500 psig / 103 bar

Maximum Diaphragm Pressure(1)
Operating: 150 psig / 10.3 bar
Emergency(2): 225 psig / 15.5 bar

Outlet Pressure at which Fracture Disk Shatters
See Figure 5

Temperature Capabilities(1)
-20(3) to 180°F / -29(3) to 82°C

Vent Connection
1/4 NPT internal with removable Type Y602-12 vent assembly

Downstream Pressure Registration Connection (Type 634M Shutoff Valve Only)
1/4 NPT internal

Approximate Weight
13 lbs / 6.0 kg

1. The pressure/temperature limits in this Instruction Manual, and any applicable code or standard limitation should not be exceeded.
2. A pressure exceeding this value can cause failure of, or leakage from, pressure containing components.
3. Low temperatures may stiffen elastomers and prevent normal shutoff.

regulator and a downstream system or equipment as shown in Figure 2. The Type 634M shutoff valve with external registration requires a control line and is installed upstream of a pressure-reducing regulator as shown in Figure 3.

Principle of Operation

Regulator outlet pressure registers on the side of the diaphragm opposite the fracture disk. An excessive rise in outlet pressure provides enough force on the diaphragm to drive the stem through the fracture disk. This lets the plug close, and stay closed until upstream and downstream pressures are relieved and a new fracture disk is installed.

Installation and Startup

All key numbers mentioned in this section appear in Figure 6.

WARNING

Installing a Type 634 or 634M high-pressure shutoff valve where its capabilities can be exceeded or where proper operation might be impaired may cause personal injury, property damage or leakage due to bursting of pressure-containing parts or explosion of accumulated gas. To avoid such conditions, use qualified personnel to install a high-pressure shutoff valve where:

- **Service conditions are within the limits specified in the Specifications section, and**
- **The valve is protected from exposure to physical damage and/or corrosive substances.**

1. Before installing, inspect the shutoff valve for any damage and foreign material that may have collected in the body.
2. Make certain that the body interior is clean and that piping is free from debris.
3. A Type 634 or 634M shutoff valve may be installed in any position as long as the direction of flow complies with the flow arrow on the side of the body (key 1). Typical positions as shown in Figure 2 or 3 are with the disk retainer (key 3) pointing down. This position eases removal of broken fracture disk pieces.
4. The Type 634 shutoff valve installation shown in Figure 2 does not shut off inlet pressure to the upstream reducing regulator and thus does not provide overpressure protection to that regulator.

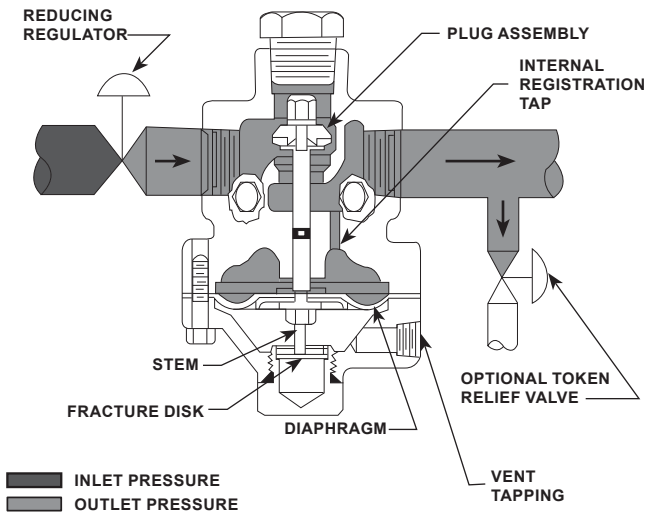

Figure 2. *Type 634 Shutoff Valve Installation*

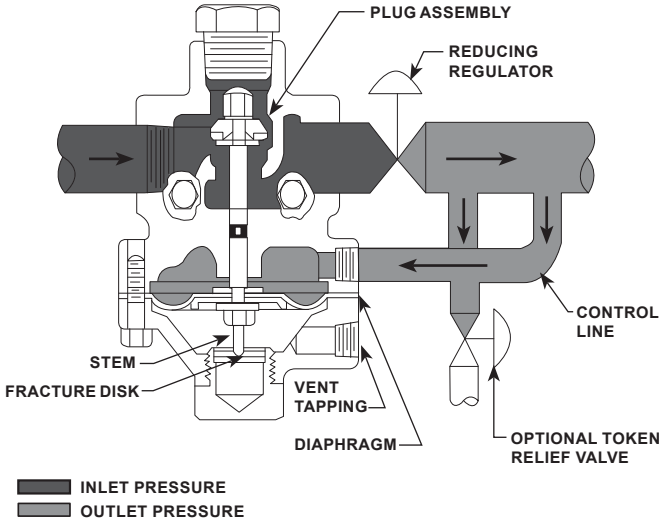

Figure 3. *Type 634M Shutoff Valve Installation*

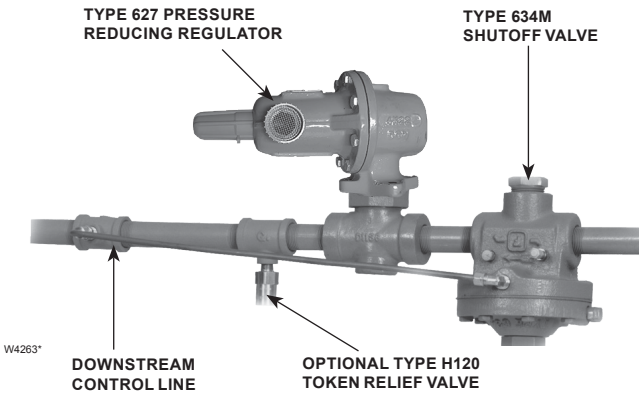

Figure 4. *Typical Installation Showing Token Relief Valve*

Therefore, inlet pressure to the upstream reducing regulator must not exceed the maximum emergency outlet pressure rating of that regulator or 1500 psig / 103 bar, whichever is less.

5. The Type 634M shutoff valve installation shown in Figure 3 will shut off flow to the downstream reducing regulator. Thus, inlet pressure to that regulator is limited by its maximum allowable inlet pressure rating or by the Type 634M maximum inlet pressure of 1500 psig / 103 bar, whichever is less.

CAUTION

To avoid a pressure surge that may shatter the fracture disk due to impact, start up the system slowly.

6. Both types can be used along with a token relief valve (Figure 4) to minimize unnecessary shutoff. The relief valve is set to open before the Type 634 or 634M shutoff valve activates. This arrangement allows the relief valve to handle minor overpressure problems such as gas thermal expansion or seat leakage due to dirt moving through the system which may move out of the regulator during the next operating cycle. The shutoff valve does activate if the regulator has a major malfunction with excessive gas flow that exceeds the token relief capacity.

WARNING

In case the diaphragm leaks, a Type 634 or 634M shutoff valve can vent gas from the vent assembly (key 22, not shown) in the upper casing (key 2). If a Type 634 or 634M shutoff valve in flammable or hazardous gas service is installed in an enclosed space or a confined area, personal injury or property damage may occur due to fire or explosion of accumulated gas. To prevent such injury or damage, provide piping or tubing to remove the vented gas to a safe, well-ventilated area at atmospheric pressure.

7. A self-threading vent assembly (key 22, not shown) is screwed into the 1/4 NPT tapping of the casing. This vent assembly may be removed and obstruction-free piping or tubing installed for remote venting of the casing. If kept in the casing, the vent assembly must be pointed down if possible or otherwise protected from blockage such as insects, snow or freezing rain.

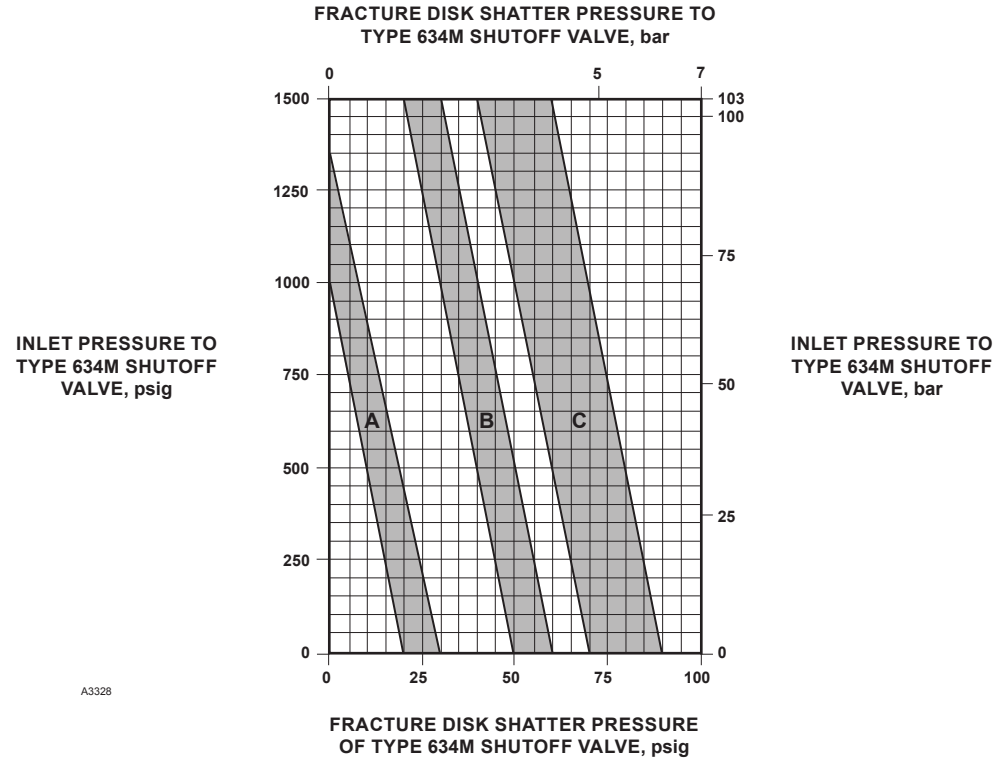

Figure 5. *Fracture Disk Selection*

Table 1. *Fracture Disk Selection*

SHATTER PRESSURE			FRACTURE DISK	
Type 634 Shutoff Valve		Type 634M Shutoff Valve	Color Code	Part Number
psig	bar			
20 to 28	1.4 to 1.9	20 to 28 psig / 1.4 to 1.9 bar at 0 psig / 0 bar inlet pressure; see curve A for other inlet pressures	Red	29A1936X012
50 to 60	3.4 to 4.1	50 to 60 psig / 3.4 to 4.1 bar at 0 psig / 0 bar inlet pressure; see curve B for other inlet pressures	Yellow	29A1936X022
72 to 88	5.0 to 6.1	72 to 88 psig / 5.0 to 6.1 bar at 0 psig / 0 bar inlet pressure; see curve C for other inlet pressures	White	29A1936X032

Note

If using pipe in the following step, apply pipe compound to the pipe threads before making the connections.

8. Install tubing or piping into the 3/4 or 1 NPT connections of the body. With a Type 634M shutoff valve, also install a control line into the 1/4 NPT control line connection in the body.

CAUTION

A closed Type 634 or 634M shutoff valve means some other component in the system, such as a reducing regulator, is causing overpressure.

The malfunctioning component and the overpressure condition must be corrected before the fracture disk is replaced.

9. The downstream pressure at which the fracture disk shatters depends on the unbalance between inlet and downstream pressure and can be determined from Figure 5. This shatter pressure is non-adjustable and can only be changed if the disk is changed (Type 634) or if either the disk or inlet pressure is changed (Type 634M). Fracture disks (key 4) are color coded to indicate their shatter pressure.
10. The Type 634 shutoff valve has negligible unbalance because downstream pressure is essentially the same as inlet pressure during

normal operation. Simply select the fracture disk (key 4) of the appropriate color from Figure 5 according to the desired shatter pressure.

11. The Type 634M shutoff valve can have considerable unbalance, thus causing the shatter pressure to vary approximately 2 psig / 0.14 bar per every 100 psig / 6.9 bar of inlet pressure change. Select the fracture disk (key 4) of the appropriate color from Figure 5 according to the desired shatter pressure in combination with the inlet pressure.

Note

The lowest pressure of the fracture disk (key 4) chosen according to step 10 or 11 must be higher than all normal operating pressures of the regulator and system being protected. Regulator pressure characteristics such as lockup, boost and proportional band must be considered as part of normal operating pressures.

Maintenance

All key numbers mentioned in this section appear in Figure 6.

Types 634 and 634M shutoff valves are normally open. They close only when the fracture disk (key 4) shatters. Frequency of maintenance depends upon the severity of service conditions and the requirements of government regulations. Parts must be replaced as necessary. Use only Emerson-authorized replacement parts.

WARNING

Personal injury or equipment damage may be caused by sudden release of pressure or explosion of accumulated gas. To avoid such injury or damage, isolate the shutoff valve from system pressure and relieve all internal pressure before starting disassembly. Releasing downstream pressure from a closed Type 634 or 634M shutoff valve does not release inlet pressure from that shutoff valve. Since there is no longer an intact fracture disk in a shutoff valve that has been closed, make sure no downstream pressure is allowed to act on the diaphragm during maintenance.

Preparing for Maintenance

1. Isolate the shutoff valve from both upstream and downstream pressure.
2. Release trapped pressure from both the inlet and outlet ends of the body (key 1) as follows:
   - Where a pipe plug (key 15) is installed in the body side tapping, use the valves provided in the system to bleed off pressure. Do not unscrew the pipe plug.
   - Where a tank valve (key 15, not shown) is installed in the body side tapping, remove the tank valve cap. Push in on the tank valve stem until all trapped pressure bleeds out, making sure the gas bleeds to a safe location. Then, replace the cap.

Replacing Fracture Disk

1. Complete the procedure for preparing for maintenance.
2. Remove the disk retainer (key 3) from the upper casing (key 2) and snap ring (key 14) from the disk retainer.
3. Shake any loose fragments out of the disk retainer (key 3), and remove any remaining fragments from the upper casing (key 2) and body cavities so as not to hinder diaphragm (key 6) action upon reassembly. Install a new fracture disk (key 4) and secure it with the snap ring (key 14). Remark the disk retainer if the replacement fracture disk has a range different from the range of the fracture disk originally shipped from the factory.
4. If necessary, replace the O-ring (key 21) used on the disk retainer (key 3).
5. Apply a suitable thread lubricant to the threads of the disk retainer (key 3), and install it into the upper casing.
6. Test for leakage after assembly.

Replacing Plug Assembly, Diaphragm or O-rings

1. Complete the procedure for preparing for maintenance.
2. Remove the pipe plug, cap screws, upper casing (key 2) and hex nut (keys 2, 11, 12 and 13) from the fracture disk (key 4) end of the stem (key 10).

3. Remove the other special washer, diaphragm heads (keys 5, 7 and 23), diaphragm (key 6) and O-rings from the fracture disk (key 4) end of the stem (key 10).
4. Slide the stem (key 10) out to gain access to the O-ring (key 8) in its center recess.
5. Remove the special hex nut, lockwasher, plug assembly, O-ring and special washer (keys 7, 8, 9, 16 and 17) from the plug end of the stem (key 10).
6. Inspect and replace parts as necessary.
7. Lubricate the recessed area of the stem (key 10) with a suitable lubricant and then install the O-ring (key 8) into the recessed area.
8. Install one special washer (key 7), O-ring (key 8), plug assembly (key 9), lockwasher (key 16) and special hex nut (key 17) onto the appropriate end of the stem (key 10) as shown in Figure 6. Insert the plug and stem assembly into the body (key 1).
9. Install the following over the fracture disk end of the stem:
   - The lower diaphragm head (key 23) with its chamfered side facing away from the plug assembly, followed by an O-ring (key 8);
   - The diaphragm, followed by another O-ring (key 8);
   - The diaphragm head (key 5) with its chamfered side facing toward the plug assembly;
   - The other special washer (key 7);
   - The other hex nut (key 12). Good assembly practice includes tightening both hex nuts (keys 12 and 17) to 6 to 8 ft-lbs / 8 to 11 N•m torque.
10. Apply a suitable thread sealant to the threads of the pipe plug (key 13), and install the pipe plug into the body (key 1).
11. Install the upper casing (key 2) so that the vent assembly (key 22, not shown) is pointed down or otherwise protected.
12. Install the cap screws (key 11). Before tightening them, make sure that the plug assembly (key 9) is closed in order to provide enough slack in the diaphragm.
13. Tighten the cap screws (key 11) using a crisscross bolting pattern. Good assembly practice includes tightening the cap screws to 13 to 17 ft-lbs / 18 to 23 N•m torque.
14. Make sure that the disk retainer (key 3) and attached parts are installed into the upper casing according to steps 3 through 5 of the replacing fracture disk procedure.

Parts Ordering

When corresponding with a local Sales Office about Types 634 and 634M shutoff valves, include the type number and all other pertinent information stamped on the disk retainer and casing. Specify the eleven-character part number when ordering from the following Parts List.

Parts List

Key	Description	Part Number
	Repair Kits (included are keys 4, 6, 8, 9 and 21)	
	With red fracture disk	R634X000012
	With yellow fracture disk	R634X000022
	With white fracture disk	R634X000032
1	WCC Steel Body	
	3/4 NPT	
	Type 634	39A1091X022
	Type 634M	39A0584X022
	1 NPT	
	Type 634	39A1090X032
	Type 634M	39A0585X022
2	Upper Casing	
	Cast iron	29A0776X012
3*	Disk Retainer	
	Steel	19A1935X022
4*	Fracture Disk, Cast iron	
	Red color code	29A1936X012
	Yellow color code	29A1936X022
	White color code	29A1936X032
5	Diaphragm Head	
	Plated steel	19A1937X012
6*	Diaphragm	
	Neoprene (CR) and Nylon (PA) fabric	19A1938X012
7	Special Washer	
	Plated steel (2 required)	19A1940X012
8*	O-ring, Nitrile (NBR) (4 required)	1D6875X0022
9*	Plug Assembly	
	Aluminum and Nitrile (NBR)	19A1943X012
10	Stem, Stainless steel	19A1941X012
11	Cap Screw, Plated steel (8 required)	1B787724052
12	Hex Nut, Steel	1A345724122
13	Pipe Plug, Plated steel	1A794728992
14	Snap Ring	12B9220X012
15	Pipe Plug, Plated steel (2 required with standard construction or 1 required with Tank Valve Inlet only)	1A500828992
15	Tank Valve (not shown), Plated steel (1 required with Tank Valve Inlet only or 2 required with standard construction	19A1951X012
16	Lockwasher, Plated carbon steel	1C225628982
17	Special Hex Nut, Stainless steel	19A1944X012
21*	O-ring, Nitrile (NBR)	10A8931X012
22	Type Y602-12 Vent Assembly (not shown)	
	Plastic	27A5516X012
23	Lower Diaphragm Head	
	Plated steel	19A6901X012

*Recommended spare part.

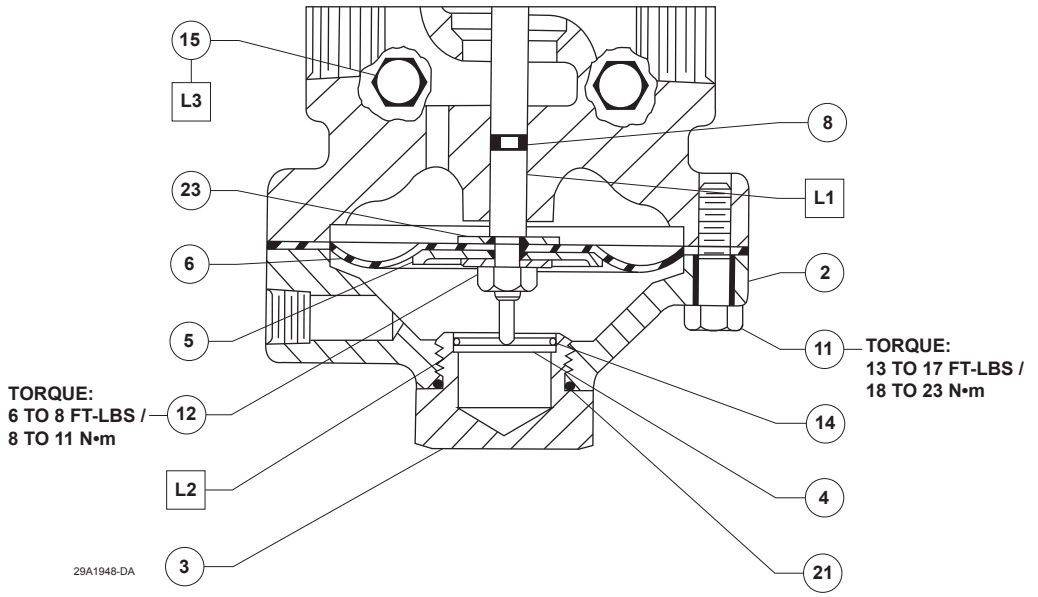

DETAIL OF TYPE 634 SHUTOFF VALVE

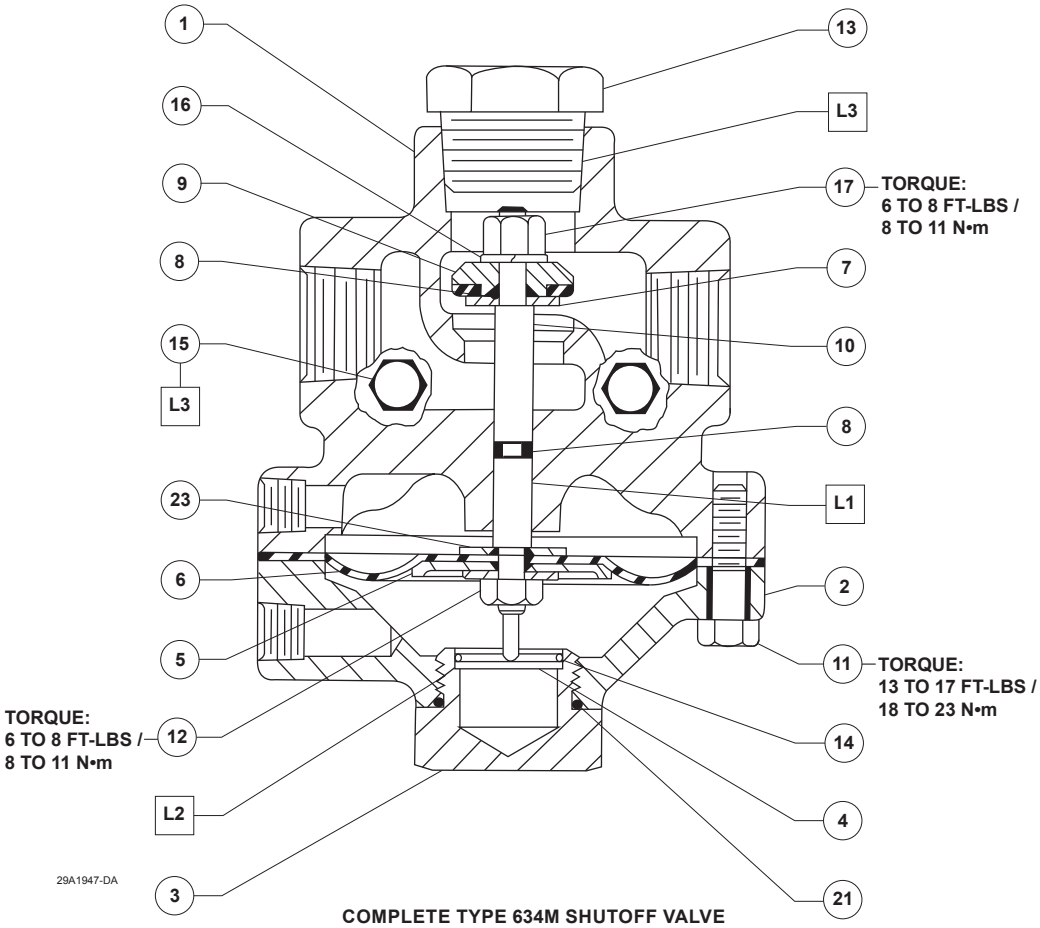

COMPLETE TYPE 634M SHUTOFF VALVE

☐ **APPLY LUBRICANT[1]:**
L1 = MULTI-PURPOSE LITHIUM POLYMER LUBRICANT
L2 =ALUMINUM ANTI-SEIZE LUBRICANT
L3 = ZINC-BASED ANTI-SEIZE LUBRICANT

1. Lubricants must be selected such that they meet the temperature requirements.

Figure 6. *Types 634 and 634M Assemblies*

Webadmin.Regulators@emerson.com
Fisher.com
Facebook.com/EmersonAutomationSolutions
LinkedIn.com/company/emerson-automation-solutions
Twitter.com/emr_automation

Emerson Automation Solutions

Americas
McKinney, Texas 75070 USA
T +1 800 558 5853
+1 972 548 3574

Europe
Bologna 40013, Italy
T +39 051 419 0611

Asia Pacific
Singapore 128461, Singapore
T +65 6777 8211

Middle East and Africa
Dubai, United Arab Emirates
T +971 4 811 8100

D100638X012 © 1984, 2018 Emerson Process Management Regulator Technologies, Inc. All rights reserved. 12/18.
The Emerson logo is a trademark and service mark of Emerson Electric Co. All other marks are the property of their prospective owners. Fisher™ is a mark owned by Fisher Controls International LLC, a business of Emerson Automation Solutions.

The contents of this publication are presented for information purposes only, and while effort has been made to ensure their accuracy, they are not to be construed as warranties or guarantees, express or implied, regarding the products or services described herein or their use or applicability. All sales are governed by our terms and conditions, which are available on request. We reserve the right to modify or improve the designs or specifications of our products at any time without notice.

Emerson Process Management Regulator Technologies, Inc. does not assume responsibility for the selection, use or maintenance of any product. Responsibility for proper selection, use and maintenance of any Emerson Process Management Regulator Technologies, Inc. product remains solely with the purchaser.

EMERSON™