CSB400 Series Commercial / Industrial Pressure Reducing Regulators

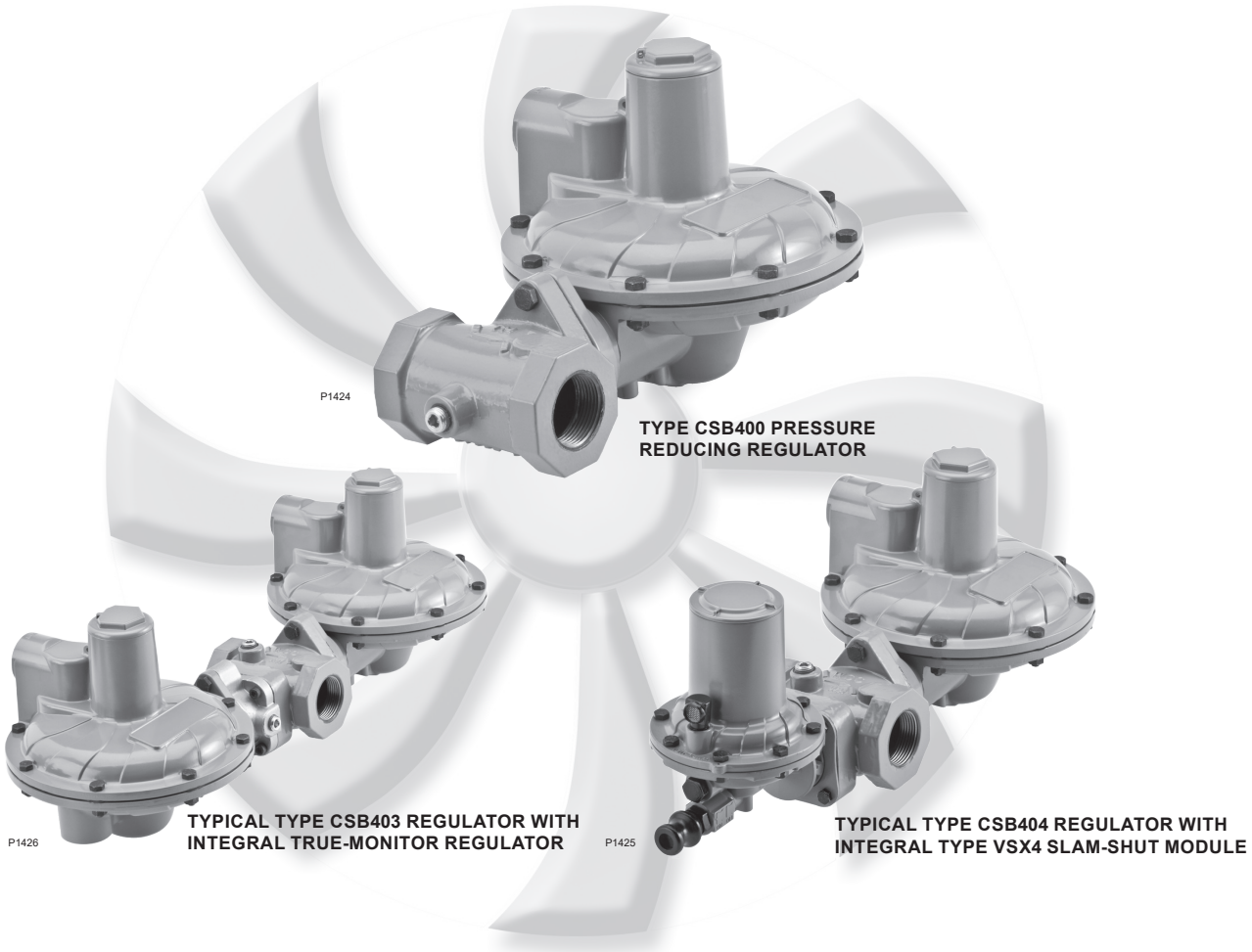

Figure 1. *Typical CSB400 Series Pressure Reducing Regulator*

Features and Benefits

- **Integral True-Monitor™**—Regulator and Monitor in One Unit
- **Slam-shut**
- **Ductile Cast Iron and WCC Steel Bodies Available**
- **Wide Variety of Body Sizes and End Connections**
- **No Special Tools for Pressure Adjustment and Orifice Removal**

Introduction

The CSB400 Series direct-operated, spring-loaded regulators have been engineered to fit a multitude of pressure-reducing applications including commercial and industrial installations. This flexibility is provided by the numerous body sizes and end connections, outlet pressure settings, as well as the option for internal, external or dual pressure registration. In addition to application flexibility, the CSB400 Series offers multiple overpressure protection options to meet your demands on application requirements.

Specifications

The Specifications section lists the specifications for the CSB400 Series Regulators. The following information is stamped on the nameplate of CSB400 Series: Type and Class, Maximum Outlet Pressure and Spring Range.

Available Configurations
See Table 1

Body Sizes, Materials, End Connections and Pressure Ratings(1)
See Table 2

Inlet Pressure Ratings(1)
See Table 3

Maximum Outlet Pressures(1)
Emergency Casing: 4.0 bar / 58 psig
To Avoid Internal Parts Damage:
All other Types: 0.34 bar / 5.0 psig above outlet pressure setting
Type CSB450: 1 bar / 14.5 psig above outlet pressure setting
Operating: 3.0 bar / 43.5 psig

Outlet Pressure Ranges(1)
17 mbar to 3.0 bar / 6.8 in. w.c. to 43.5 psig
See Table 5

Flow Capacities
See Tables 9 through 32

Orifice Size
17.5 mm / 11/16 in.

Operating Temperature (TS)(1)(2)
According to PED Standards:
All Types: -20 to 66°C / -4 to 150°F
Non-PED with Standard Construction:
Types CSB400/CSB404 and CSB420/CSB424: -20 to 66°C / -4 to 150°F
Types CSB450/CSB454(3): -30 to 66°C / -20 to 150°F
Non-PED with Low Temperature Construction:
Types CSB400F/CSB404F(3) and CSB420F/CB424F(3): -30 to 66°C / -22 to 150°F

Spring Case Vent Connection
1 NPT

Spring Case Vent and Body Orientation
See Figure 8

TM600 Series True-Monitor™ Performance
Inlet Pressure Ratings
Maximum Operating: Up to 8.62 bar / up to 125 psig
Maximum Emergency: 12.1 bar / 175 psig
Outlet Pressure Ranges: 27 mbar to 1 bar / 11 in. w.c. to 14.5 psig
Minimum Set Pressure: 20 mbar / 8 in. w.c.
Maximum Set Pressure: 1 bar / 14.5 psig

Type VSX4 Slam-Shut Device
Maximum Inlet Pressure: 20 bar / 290 psig
Maximum Operating Inlet Pressure: 16 bar / 232 psig

Flow and IEC Sizing Coefficients
See Table 3

Construction Materials
CSB400 Series Main Valve and Actuator
Body: Ductile Cast Iron and WCC Steel
Body O-ring: Nitrile (NBR)
Closing Cap and Adjusting Screw: Aluminum
Diaphragm Case, Spring Case, Diaphragm Plate and Valve Stem: Aluminum
Orifice: Aluminum
Pusher Post: Zinc-plated Steel
Relief Valve Seat: Aluminum
Diaphragm and Disk: Nitrile (NBR)
Control Spring: 302 Stainless steel
Relief Valve Spring: 302 Stainless Steel
Relief Valve Diaphragm Retainer: Steel
Vent Screen: 18-8 Stainless steel
Retainer Ring: Steel
Lever Pin: Stainless Steel
Spring Seat, Lever and Other Metal Parts: Steel
TM600 Series True-Monitor Actuator
Diaphragm Case, Spring Case, Diaphragm Plate and Valve Stem: Aluminum
Diaphragm and Disk: Nitrile (NBR)
Control Spring: 302 Stainless steel
Vent Screen: 18-8 Stainless steel
Vent Screen Retainer: Stainless steel
Closing Cap: Aluminum
Adjusting Screw: Aluminum
Type VSX4 Slam-shut Device
Diaphragm Case, Spring Case, Diaphragm Plate and Valve Stem: Aluminum
Diaphragm and Disk: Nitrile (NBR)
Control Spring: Music Wire or 302 Stainless steel
Vent Screen: 18-8 Stainless steel
Vent Screen Retainer: Zinc-plated steel
Closing Cap: Aluminum
Adjusting Screw: Aluminum

Approximate Weights
with Threaded body
Type CSB400: 4 kg / 9 lbs
Type CSB403: 9 kg / 20 lbs
Type CSB404: 5 kg / 11 lbs
with Flanged body
Add 4 kg / 9 lbs to weights listed

Designed, Tested and Evaluated Consistent With:
ANSI B16, ASME Section 8, ASTM B117 (Corrosion Resistance) and EN 334

1. The pressure/temperature limits in this Bulletin or any applicable standard limitation should not be exceeded.
2. Standard token relief set values listed in Table 8 are based on -20 to 60°C / -4 to 140°F.
3. Product has passed Fisher™ testing for lockup, relief start-to-discharge and reseal down to -40°.

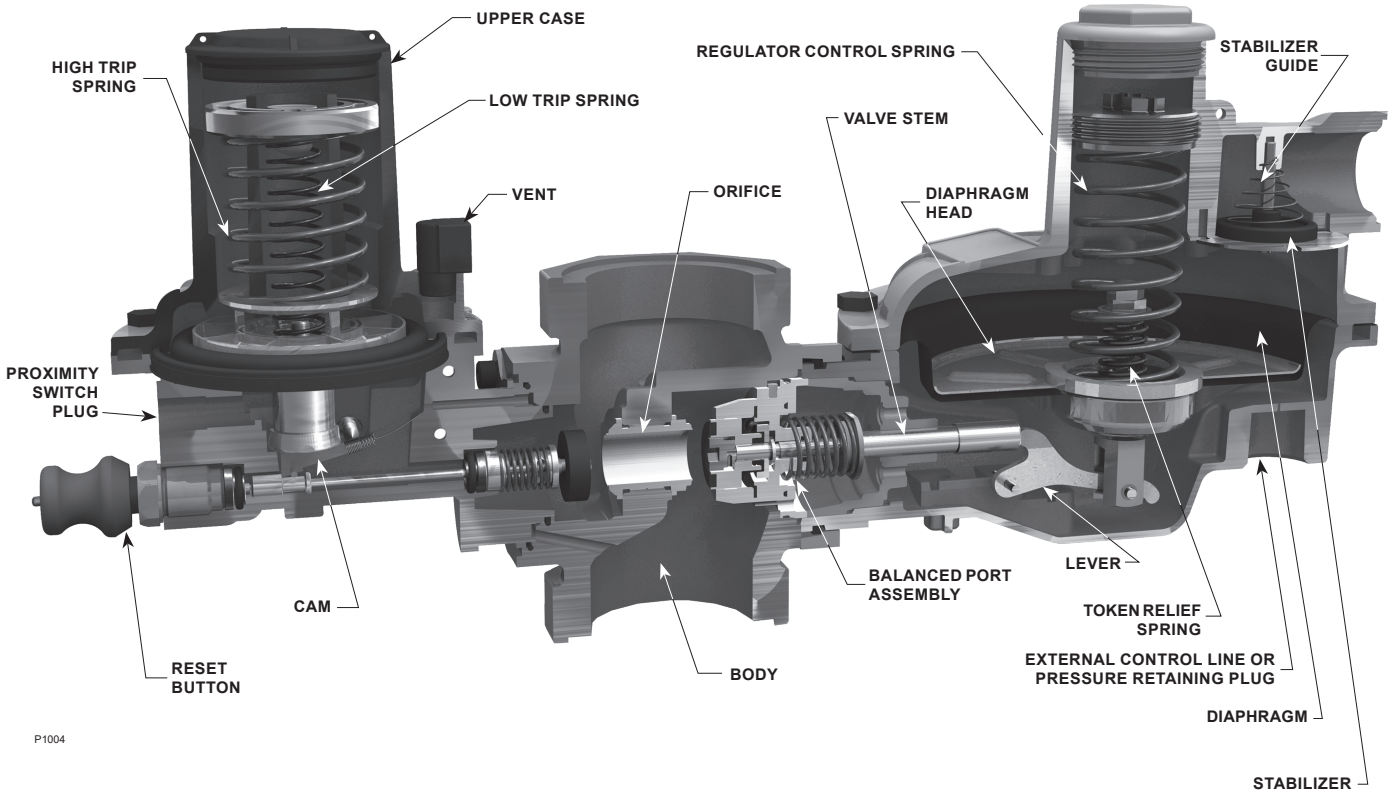

Figure 2. *Type CSB404 Regulator with Type VSX4 Slam-shut Internal View*

Multiple Overpressure Protection Options Available:

- **Token Internal Relief—**Provides relief from minor overpressure caused by nicks or dents on the orifice or by thermal expansion of gas in the downstream line. Token relief also provides a token or signal, in the form of odor, that an overpressure situation is occurring.
- **True-Monitor™ Protection—**Combines the operation of a conventional two-regulator wide-open monitor set into one body.
- **Slam-Shut Protection—**Discontinues gas service by shutting off the gas flow if there is an overpressure or underpressure condition.

Table 1. *Available Configurations*

TYPE NUMBER								OPTIONS
C	S	B	4					
								PRESSURE CONSTRUCTION AND UPSTREAM MONITOR APPLICATIONS
				0				Low Pressure Applications *(Outlet Pressure: 17 to 100 mbar / 7 to 40 in. w.c.)*
				1				Low Pressure, Upstream Monitoring Applications[1][3] *(Outlet Pressure: 17 to 100 mbar / 7 to 40 in. w.c.)*
				2				Medium Pressure Applications *(Outlet Pressure: 100 to 517 mbar / 40 to 208 in. w.c.)*
				3				Medium Pressure, Upstream Monitoring Applications[1][3] *(Outlet Pressure: 100 to 517 mbar / 40 to 208 in. w.c.)*
				5				High Pressure Applications[2] *(Outlet Pressure: 0.50 to 3.0 bar / 7 to 43.5 psig)*
								OVERPRESSURE PROTECTION
					0			Without Overpressure Protection Module
					0F			Low Temperature Capability, Without Overpressure Protection Module
					3			With Integral True-Monitor™ Module[4]
					3F			Low Temperature Capability, With Integral True-Monitor Module[4]
					4			With Type VSX4 Slam-shut Module[5]
					4F			Low Temperature Capability, With Type VSX4 Slam-shut Module[5]
								PRESSURE REGISTRATION
						D		Dual Registration (Best Solution for Quick Changing Loads)
						E		External Registration
						I		Internal Registration
								RELIEF
							N	No Relief
							T	Internal Token Relief

Example: Type number **CSB424DT:** CSB400 Series regulator constructed for medium pressure applications, with Type VSX4 slam-shut module, Dual pressure registration and Internal Token relief.

1. Not available with Integral True-Monitor option.
2. Not available with Integral True-Monitor or Token Relief option.
3. Available with External Pressure Registration only.
4. Reference Instruction Manual D103126X012 for information regarding the Type TM600 Integral True-Monitor module.
5. Reference Instruction Manual D103127X012 for information regarding the Type VSX4 Slam-shut module.

Table 2. *Body Sizes, Material, End Connections and Pressure Ratings*

BODY MATERIAL	INLET SIZE		OUTLET SIZE		END CONNECTION	FACE-TO-FACE DIMENSION		BODY PRESSURE RATING	
	DN	NPS	DN	NPS		mm	In.	bar	psig
Ductile Iron	25	1	25	1	NPT	100	4	20	290
	32	1-1/4	32	1-1/4		114	4.5		
	40	1-1/2	40	1-1/2		114	4.5		
	50	2	50	2		127	5		
	25	1	25	1	Rp	100	4		
	25	1	32	1-1/4		114	4.5		
	32	1-1/4	32	1-1/4		114	4.5		
	40	1-1/2	40	1-1/2		114	4.5		
	50	2	50	2		127	5		
	50	2	50	2	CL150 FF	254	10		
					PN 10/16	254	10	16	232
	40[1]	1-1/2[1]	40[1]	1-1/2[1]	PN 16 Slip-On	184	7.24	16	232
	25	1	57	2-1/4	Rp x GAZ	105	4.1	20	290
WCC Steel	25	1	25	1	NPT	100	4		
	32	1-1/4	32	1-1/4		114	4.5		
	40	1-1/2	40	1-1/2		114	4.5		
	25	1	25	1	Rp	100	4		
	32	1-1/4	32	1-1/4		114	4.5		
	40	1-1/2	40	1-1/2		114	4.5		

1. Uses Rp 1-1/2 x 1-1/2 threaded body with PN 16 slip-on flanges.

Table 3. *Maximum Inlet Pressure Ratings, Flow and Sizing Coefficients[1]*

TYPE	SPECIFIC MAXIMUM ALLOWABLE PRESSURE/MAXIMUM EMERGENCY OUTLET PRESSURE		MAXIMUM OPERATING INLET PRESSURE		MAXIMUM EMERGENCY INLET PRESSURE[1][2]		ORIFICE SIZE		FLOW COEFFICIENTS WIDE OPEN			IEC SIZING COEFFICIENTS		
	P_{SD}		P_{umax}		P_S									
	bar	psig	bar	psig	bar	psig	mm	In.	C_g	C_v	C_1	X_t	F_D	F_L
CSB400F and CSB404F	4.0	58	6.0	87	12	174	17.5	11/16	428	11	43	1.16	0.84	0.90
CSB403F and CSB423F			6.0	87	10	145								
CSB403 and CSB423			10	145	10	145								
CSB410 and CSB414														
CSB430 and CSB434														
CSB400 and CSB404			10	145	12	174								
CSB420F and CSB424F														
CSB420 and CSB424			16	232	20	290								
CSB450 and CSB454														

1. EN 334 Differential Strength (DS) Pressure ratings. Used where DS ratings required by EN334 Code. (Not applicable for non-EU countries.)
2. If ordered with a PN 16 flanged connection, P_S rating is a maximum of 16 bar / 232 psig. P_S rating may be lower than 16 bar / 232 psig as indicated by this table.

Table 4. *EN334 Integral Strength (IS) Pressure Ratings (Applicable only where inlet rating cannot exceed outlet rating per EN334 Code. Not applicable for non-EU countries)*

TYPE	MAXIMUM ALLOWABLE PRESSURE[1] / MAXIMUM EMERGENCY INLET PRESSURE		MAXIMUM OPERATING INLET PRESSURE[1]	
	P_S		P_{umax}	
	bar	psig	bar	psig
CSB400, CSB400F, CSB404 and CSB404F	4.0	58	4.0	58
CSB420, CSB420F, CSB424 and CSB424F				
CSB450 and CSB454				
CSB410 and CSB414				
CSB403, CSB403F, CSB423 and CSB423F				
CSB403 and CSB423				

1. For the Integral Strength (IS) version, the maximum value of P_S and P_{umax} should be similar to the PSD used for the Differential Strength (DS) version.

Table 5. *CSB400 Series Primary Regulator Outlet Pressure Ranges*

TYPE	OPERATING PRESSURE RANGES, W_d		PART NUMBER	SPRING COLOR	SPRING WIRE DIAMETER		SPRING FREE LENGTH	
	mbar	In. w.c.			mm	In.	mm	In.
CBS400, CSB400F, CSB403, CSB403F, CSB404, CSB404F, CSB410 and CSB414	17 to 24	6.8 to 9.6	GE30191X012	Pink	2.03	0.080	140	5.50
	24 to 35	9.6 to 14	GE43955X012	Orange Stripe	2.19	0.086	152	6.00
	35 to 60	14 to 24.1	GE30201X012	Dark Green	3.23	0.127	110	4.35
	54 to 100	21.7 to 40	GE30202X012	Tan	2.85	0.112	127	5.00
CSB420, CSB420F, CSB423, CSB423F, CSB424, CSB424F, CSB430 and CSB434	100 to 160	1.45 to 2.3 psig	GE35081X012	Purple Stripe	3.86	0.152	124	4.90
	138 to 300	2.0 to 4.4 psig	GE30192X012	Dark Blue	4.27	0.168	118	4.65
	276 to 517	4 to 7.5 psig	GE33121X012	Red	4.93	0.194	118	4.65
CSB450 and CSB454	500 mbar to 1 bar	7.3 to 14.5 psig	GE30203X012	Light Blue	5.59	0.220	102	4.00
	1 to 3 bar	14.5 to 43.5 psig	GE30204X012	Light Green	6.73	0.265	100	3.95

Principle of Operations

Refer to Figures 4 and 5. When downstream demand decreases, the pressure under the diaphragm increases. This pressure overcomes the regulator setting (which is set by a spring). Through the action of the pusher post assembly, lever and valve stem, the balanced port assembly moves closer to the orifice and reduces gas flow. If demand downstream increases, pressure under the diaphragm decreases. Spring force pushes the pusher post assembly downward and the balanced port assembly moves away from the orifice.

Installation

The CSB400 Series regulators may be installed in any position. However, the spring case vent should be pointed downward. If gas escaping through the CSB400 Series token internal relief valve could constitute a hazard, the spring case vent must be piped to a location where escaping gas will not be hazardous. If the vented gas will be piped to another location, obstruction-free tubing or piping at least equal to the vent and the end of the vent pipe must be protected from anything that might clog it.

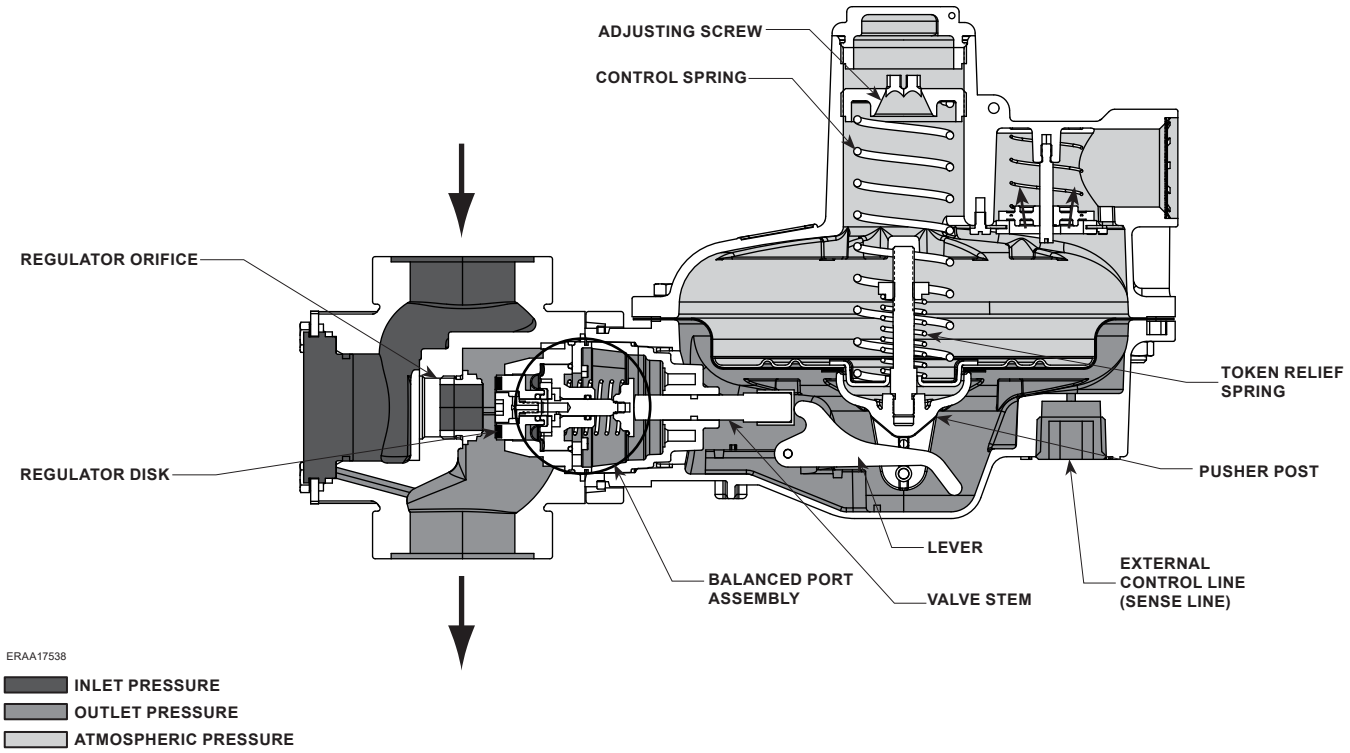

Figure 3. *CSB400 Series with External Registration and Token Relief Operational Schematic*

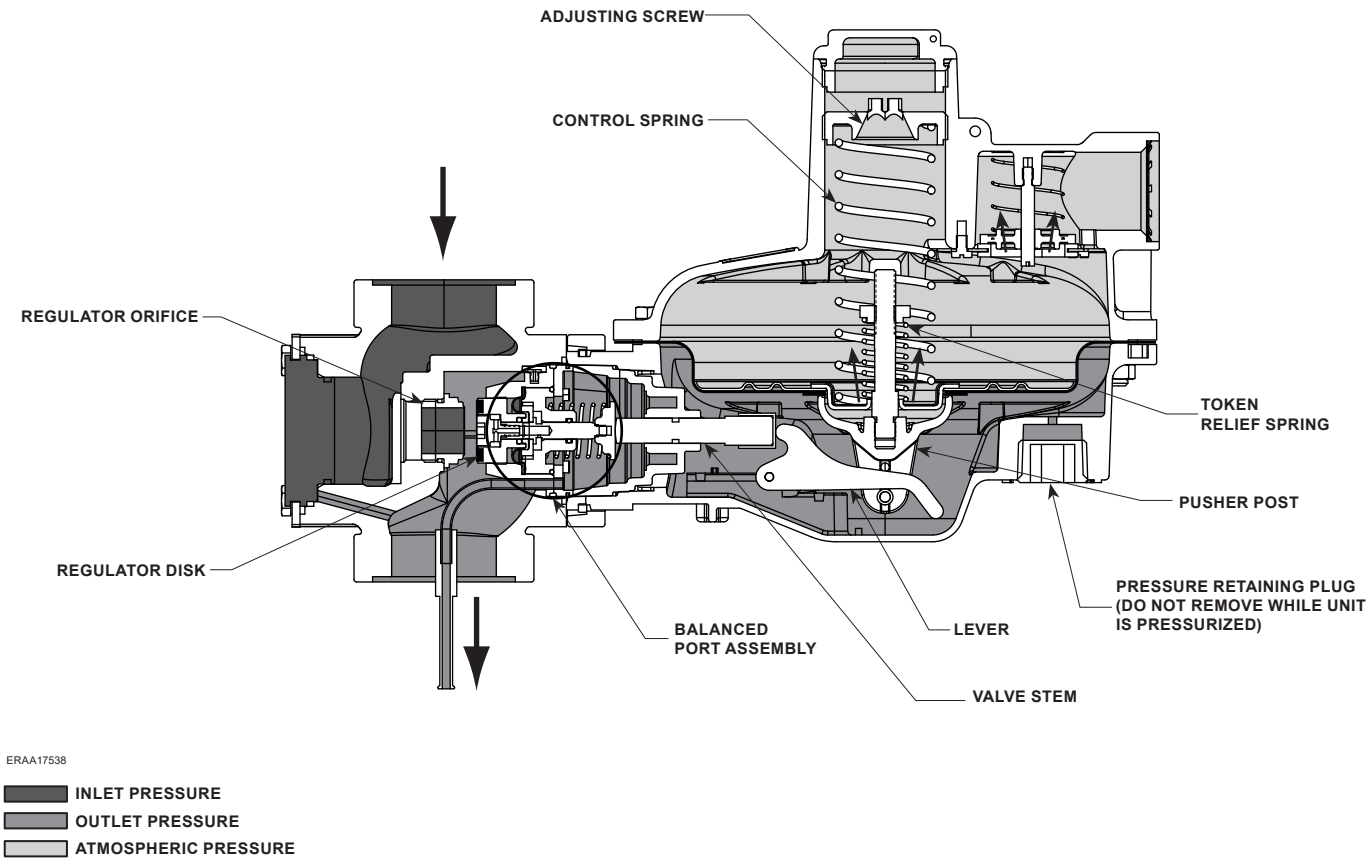

Figure 4. *CSB400 Series with Internal Registration and Token Relief Operational Schematic*

Pressure Registration and Downstream Control Line Connection

Internal Registration

CSB400 Series regulators with an “IT” or “IN” in the type number have internal pressure registration. Internal registration utilizes an internal sense tube located in the outlet of the body to communicate the outlet pressure to the actuator chamber. Internal registration is used for ease of installation. Response time of the regulator is not as quick as dual registration due to internal sense only having one sensing port feeding the actuator chamber.

Dual Registration

CSB400 Series regulators with an “DT” or “DN” in the type number have dual pressure registration. Dual registration utilizes both internal sense and an external downstream pressure registration line (control line) connected to the 3/4 NPT control line tapping in the lower diaphragm casing. By providing two channels of pressure communication to the actuator, dual registration provides the best method of pressure registration for applications that exhibit quick changing loads. Refer to the CSB400 Series Instruction Manual for instruction regarding downstream control line installation. The Type VSX4 slam-shut and Integral Monitor have external pressure registration only and require downstream control line installation. One exception exists when the Primary regulator is installed on a Rp 1 x 2-1/4 GAZ body, then the Type VSX4 slam-shut has the option of internal pressure registration.

External Registration

CSB400 Series regulators with an “ET” or “EN” in the type number have external pressure registration. External registration does not sense pressure internally, but utilizes a 3/4 NPT control line tapping in the lower diaphragm casing. A regulator with a downstream control line is typically used for monitoring installations or other applications where there is an equipment installed between the regulator and the pressure control point. The balance port separates the body pressure from diaphragm case pressure on monitor installations where leakage cannot be tolerated. Refer to the CSB400 Series Instruction Manual for instruction regarding downstream control line installation. The Type VSX4 slam-shut and Integral Monitor have external pressure registration only and require downstream control line installation. One exception exists when the Primary regulator is installed on a Rp 1 x 2-1/4 GAZ body, then the Type VSX4 slam-shut has the option of internal pressure registration.

Internal Token Relief

CSB400 Series regulators with a “T” in the type number, provide a low capacity or token internal relief to help minimize overpressure. The token relief also acts to avoid nuisance trips of the slam-shut mechanism due to pressure increase from thermal expansion or overpressure caused by orifice damage such as nicks and dents.

Overpressure Protection

Overpressuring any portion of a regulator or associated equipment may cause personal injury, leakage or property damage due to bursting of pressure-containing parts or explosion of accumulated gas. Provide appropriate pressure relieving to ensure that the critical limits in the Specification section are not exceeded. Regulator operation within ratings does not prevent the possibility of damage from external sources or from debris in the pipeline.

The CSB400 Series regulators have outlet pressure ratings that are lower than their inlet pressure ratings. A pressure relieving or pressure limiting device is needed for the CSB400 Series that do not have an Integral Monitor or slam-shut device installed or do not have a separate upstream monitoring regulator installed such as the Type CSB410.

Types CSB403 and CSB423 provide an integral True-Monitor™ installed on the inlet side of the body that serves to control downstream pressure if the primary regulator ceases to control downstream pressure.

Types CSB404, CSB424 and CSB454 regulators rely on Type VSX4 slam-shut device for overpressure protection. In the event that outlet pressure rises above or falls below the pressure setting of the Type VSX4, the slam-shut device will activate or trip, thereby stopping flow through to the downstream system. To restart flow to the downstream system, the Type VSX4 must be reset. Type CSB404 regulators with a “T” in their type number provide a low capacity (Token) internal relief which provides sufficient relief to preclude the Type VSX4 tripping due to pressure rise caused by thermal expansion or overpressure due to orifice damage such as nicks and dents.

Types CSB410 and CSB430 are monitor regulators installed upstream of the Primary regulator. An external control line is connected downstream of the Primary regulator to provide protection if the Primary regulator would cease to control downstream pressure.

Types CSB414 and CSB434 regulators act in the same manner as the Types CSB410 and CSB430 described previously, however, they also provide additional overpressure protection to the

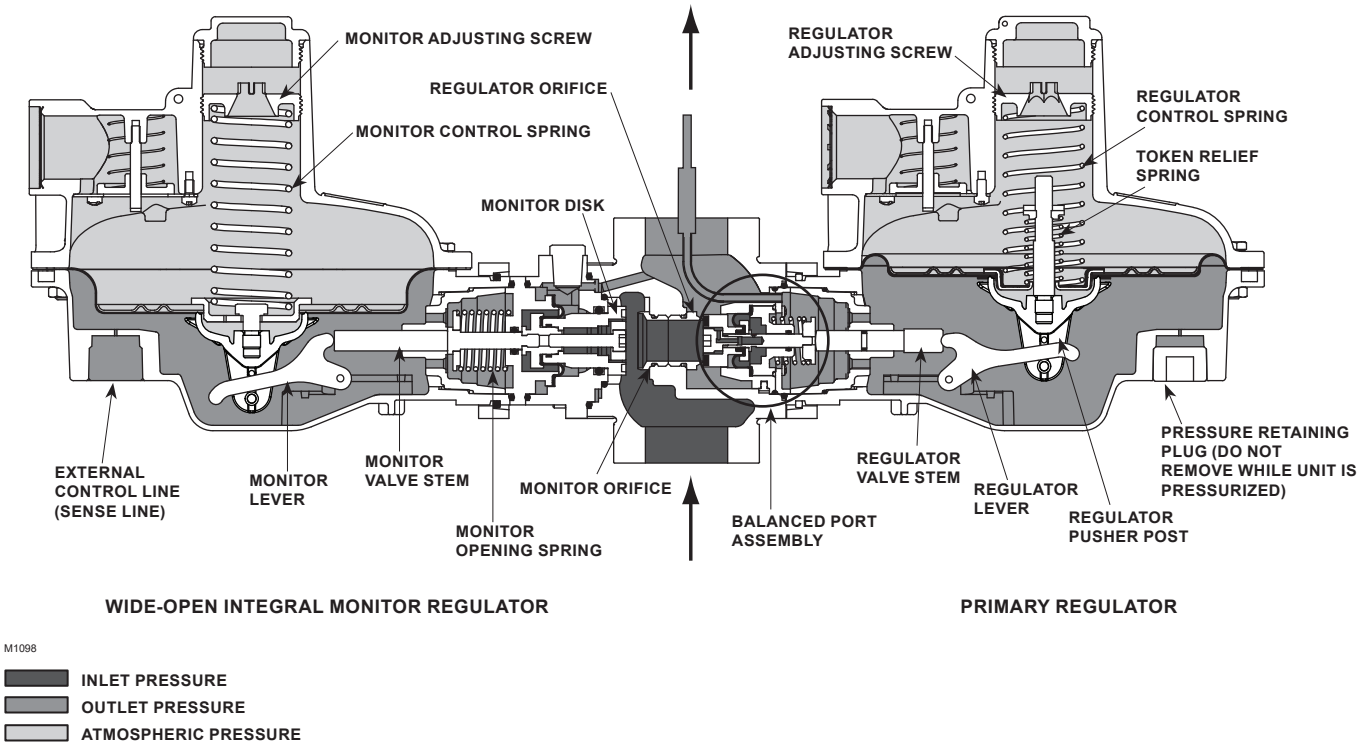

Figure 5. *Type CSB403IT Internally Registered Primary Regulator with Externally Registered Integral Monitor Operational Schematic*

Table 6. *True-Monitor Protection vs. Backup Orifice Device*

	TYPE CSB403 TRUE-MONITOR	BACKUP ORIFICE DEVICE
Damage/nick on seat	X	X
Damage to disk	X	X
Damage or disconnected lever	X	- - - -
Damage to diaphragm	X	- - - -
Blocked or broken registration to primary regulator	X	- - - -

1. As the Integral Monitor is externally registered, it is required that the Primary and Integral Wide-Open Monitor do not share downstream sense lines.

downstream system via a slam-shut that activates if the downstream system pressure rises above or falls below the setpoint of the slam-shut.

Upstream Monitoring Regulator

Types CSB410, CSB414, CSB430 and CSB434 act as separate upstream monitoring regulators. These upstream monitor regulators act in the same manner as a Type CSB400 with external pressure registration only, they are installed upstream of a primary regulator. If the downstream Primary regulator ceases to control the downstream system pressure and downstream pressure begins to increase, this pressure increase is registered underneath the diaphragm of the Upstream Monitor regulator through the downstream control line. The increased pressure will overcome the force for the control spring and cause the diaphragm assembly to move upward, thereby moving the lever upward and moving the disk closer to the orifice to regulate flow and downstream system pressure.

Integral True-Monitor™ Protection

Types CSB403 and CSB423 combine the operation of a conventional two-regulator wide-open monitor set into one body. The Integral True-Monitor installed on the inlet side of the body and serves to throttle flow and maintain an acceptable downstream pressure in the case where the Primary regulator ceases to control the downstream pressure. Unlike multiple seat designs that rely on the primary regulator for all failure modes, the Type CSB403 provides protection from a wide variety of occurrences that could cause the Primary regulator not to regulate downstream pressure. Table 6 shows a comparison between the Integral True-Monitor protection and the protection offered by an orifice backup device.

Refer to Figure 5. If the Primary regulator ceases to control downstream pressure, outlet pressure will rise underneath the diaphragm of the Integral monitor, which will assume control of the downstream pressure.

Table 6 shows a comparison between the Integral True-Monitor protection and the protection offered by

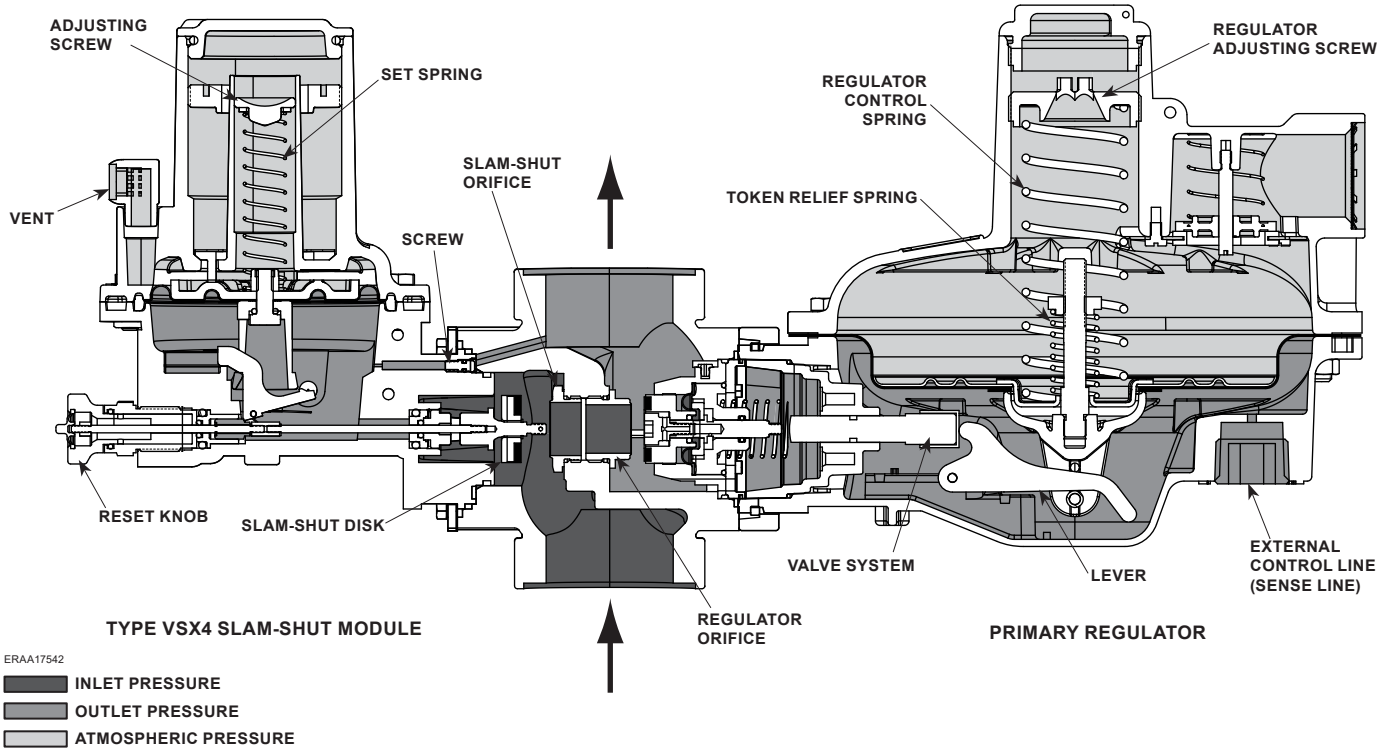

Figure 6. *Type CSB404ET Externally Registered Regulator and Slam-Shut Operational Schematic*

a backup orifice device, which seals on a secondary seating surface should the primary orifice seating surface or disk become damaged.

The Integral True-Monitor™ is externally registered and will require a downstream control line. If the primary regulator has internal registration, the monitor will still require an external control line for pressure registration.

Token Relief

An optional token relief may be installed on the primary regulator of the Type CSB403, denoted by the “T” in the type number, for example, Type CSB403ET. The token relief will be activated when the pressure rises and activates the monitoring regulator in order to provide an indication that the monitor is controlling flow instead of the primary regulator.

Type VSX4 Slam-Shut Device

The Type VSX4 slam-shut device on the Type CSB404 regulator is a fast acting shutoff device that provides overpressure (OPSO) or over and underpressure (OPSO/UPSO) protection by shutting off the flow of gas to the downstream system. The Type VSX4’s actions are independent of the Type CSB404 regulator and of variations to the inlet pressure. The Type VSX4 uses external pressure registration and requires a downstream control line regardless if the regulator is internally or externally registered.

Refer to the CSB400 Series Instruction Manual for instruction regarding downstream control line installation. The Type VSX4 slam-shut has an external pressure registration only and requires downstream control line installation. One exception exists when the Primary regulator is installed on a Rp 1 x 2-1/4 GAZ body, then the Type VSX4 slam-shut has the option of internal pressure registration.

Refer to Figures 6 and 7, shutoff disk is normally located in the open (reset) position. If the pressure below the diaphragm increases (or decreases) reaching the Type VSX4 setpoint, the diaphragm will travel upwards (or downwards) to release the trip mechanism which allows the spring force on the stem will push the stem and disk against the seat, shutting off all gas flow. The manual reset has an internal bypass to equalize the reset pressure on either side on the shutoff disk.

In order for the Underpressure Shutoff (UPSO) of any slam-shut to be triggered, the downstream pipe pressure must drop below the UPSO setpoint. In the case of a downstream line break, numerous factors can prevent the downstream pipe pressure from decreasing below the slam-shut UPSO setpoint. These factors include the distance of pipe to the break, the diameter of the pipe, size of the break and the number of restrictions, such as valves, elbows and bends, downstream of the regulator and/or slam-shut device. Due to these factors additional protections should be installed to stop flow in the event of a line break.

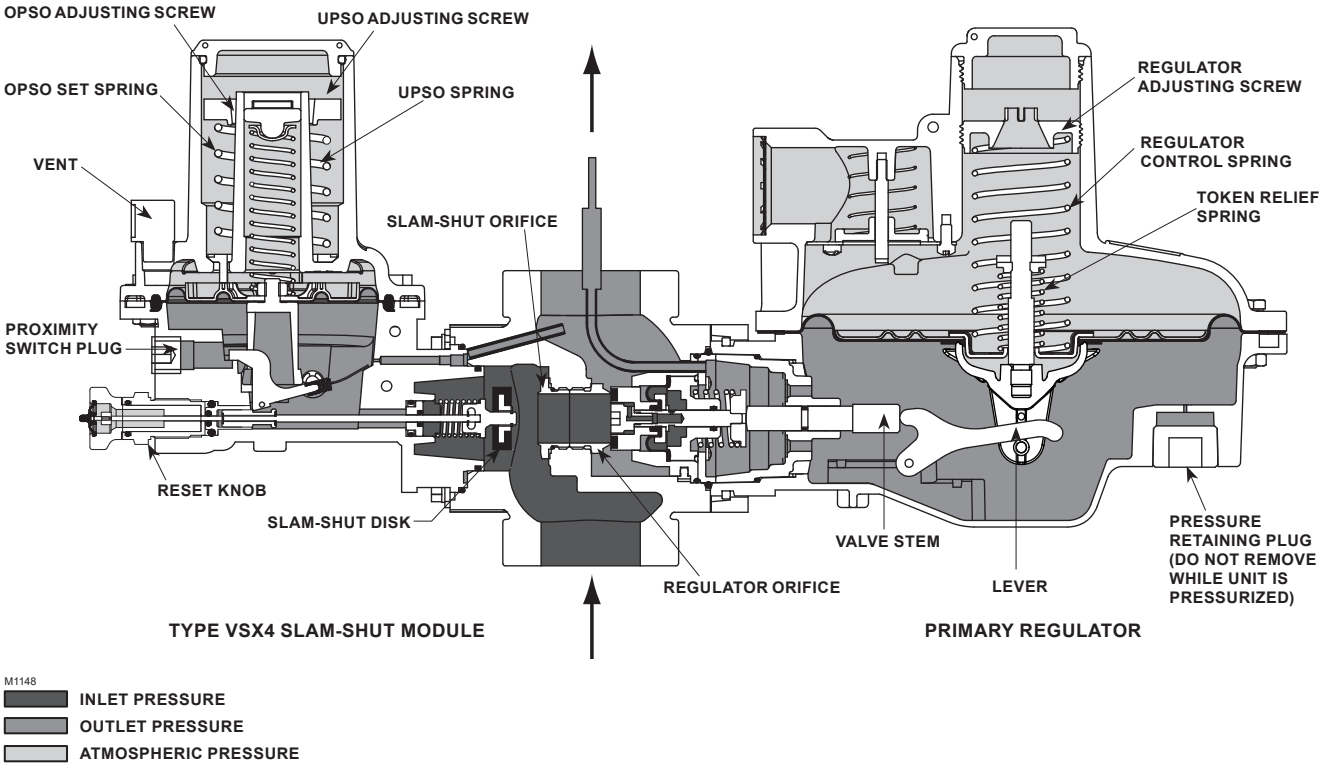

Figure 7. *Type CSB404IT Internally Registered Regulator with Externally Registered Slam-Shut Operational Schematic*

Table 7. *Primary Regulator and Integral Monitor Outlet Pressure Ranges*

TYPE	PRIMARY REGULATOR									INTEGRAL TRUE-MONITOR™					
	Factory Setpoint		Set Pressure Range		Color	Part Number	Factory Token Relief Set(1)			Factory Setpoint(1)		Spring Range		Color	Part Number
	mbar	psig	mbar	psig			% of Reg. Set	mbar	psig	mbar	psig	mbar	psig		
CSB403 and CSB403F	20	8 in. w.c.	17 to 24	6.8 to 9.6 in. w.c.	Pink	GE30191X012	No Token Relief			37	15 in. w.c.	30 to 52	12 to 21 in. w.c.	Blue	GE30189X012
							170%	35	14 in. w.c.	52	21 in. w.c.	45 to 75	18 to 30 in. w.c.	Green	GE30196X012
	30	12 in. w.c.	24 to 35	9.6 to 14 in. w.c.	Orange Stripe	GE43955X012	No Token Relief								
							150%	45	18 in. w.c.	70	1	65 to 99	26 to 40 in. w.c.	Orange	GE30225X012
	50	20 in. w.c.	35 to 60	14 to 24 in. w.c.	Dark Green	GE30201X012	No Token Relief								
							140%	70	1	103	1.5	97 to 200	1.4 to 2.9	Black	GE30190X012
	69	1	54 to 100	0.78 to 1.45	Tan	GE30202X012	No Token Relief								
							130%	90	1.3	138	2	97 to 200	1.4 to 2.9	Black	GE30190X012
CSB423 and CSB423F	138	2	100 to 160	1.45 to 2.3	Purple Stripe	GE35081X012	No Token Relief			172	2.5	97 to 200	1.4 to 2.9	Black	GE30190X012
							130%	180	2.6	241	3.5	197 to 255	2.6 to 3.7	Purple	GE35081X012
	207	3	138 to 300	2.0 to 4.4	Dark Blue	GE30192X012	No Token Relief			276	4	248 to 414	3.6 to 6	Dark Blue	GE30192X012
							125%	260	3.8	345	5				
	345	5	276 to 517	4 to 7.5	Red	GE33121X012	No Token Relief			414	6	352 to 517	5.1 to 7.5	Red	GE33121X012
							125%	430	6.25	448	6.5				
	483	7	276 to 517	4 to 7.5	Red	GE33121X012	No Token Relief			690	10	500 to 1000	7.3 to 14.5	Light Blue	GE30203X012
							125%	586	8.5						
CSB453	690	10	500 to 1000	7.3 to 14.5	Light Blue	GE30203X012	No Token Relief			828	12	500 to 1000	7.3 to 14.5	Light Blue	GE30203X012
							125%	793	11.5						

1. Recommended minimum Integral True-Monitor setpoints shown.

Table 8. *Regulator and Slam-shut OPSO and UPSO Pressure Ranges*

TYPE	REGULATOR								SLAM-SHUT MODULE									
									Overpressure Shutoff (OPSO)						Underpressure Shutoff (UPSO)			
	Set Pressure Range		Standard Setpoints		Token Relief Set[1][2]		Available Token Relief Range Shown as a % of Regulator Setpoint		Minimum Required Difference between Token Relief and OPSO Set		Standard OPSO Set Values[1] P_{dso}		OPSO Set Range as a % of Regulator Setpoint		Standard UPSO Set Values[1] P_{dsu}		UPSO Set Range as a % of Regulator Setpoint	
	mbar	psig	mbar	psig	mbar	psig	Min[2]	Max	mbar	psig	mbar	psig	Min	Max	mbar	psig	Min	Max
CSB404, CSB404F and CSB414	17 to 24	0.25 to 0.35	20	0.29	34	0.49	170	215	8	0.12	43	0.62	215%	270%	10	0.15	50	56
			21	0.30	36	0.52					45	0.65			11	0.16		
	24 to 35	0.35 to 0.51	27	0.39	41	0.59	150	160	10	0.12	51	0.74	190%	200%	14	0.20	50	60
			30	0.44	45	0.65					57	0.83			15	0.22		
			35	0.50	53	0.76					67	0.96			18	0.26		
	35 to 60	0.51 to 0.87	50	0.70	70	1.0	140	158	16	0.23	90	1.3	180%	200%	25	0.36	50	70
			60	0.87	84	1.2					108	1.57			30	0.44		
	54 to 100	0.78 to 1.5	75	1.10	98	1.4	130	140	20	0.29	128	1.85	170%	190%	38	0.54	50	70
			100	1.5	130	1.9					170	2.47			50	0.73		
CSB424, CSB424F and CSB434	100 to 160	1.5 to 2.3	150	2.2	195	2.8	130	140	40	0.58	248	3.59	165%	175%	75	1.1	50	70
			160	2.3	208	3.0					264	3.83			80	1.2		
	138 to 300	2.0 to 4.4	300	4.4	375	5.4	125	140	50	0.73	450	6.53	150%	165%	150	2.2		
	276 to 517	4.0 to 7.5	500	7.3	625	9.1	125	140	60	0.87	700	10.2	140%	180%	250	3.6		
CSB454[3]	500 to 1000	7.3 to 14.5	1000	14.5	- - - -	- - - -	- - - -	- - - -	- - - -	- - - -	1320	19.2	112%	140%	500	7.3	50	70
	1000 to 3000	14.5 to 43.5	1200	17.4	- - - -	- - - -	- - - -	- - - -	- - - -	- - - -	1600	23.2	112%	133%	600	8.7		
			1500	21.6	- - - -	- - - -	- - - -	- - - -	- - - -	- - - -	1900	27.6	112%	127%	750	10.9		
			2000	29.0	- - - -	- - - -	- - - -	- - - -	- - - -	- - - -	2400	34.8	112%	120%	1000	14.5		
			3000	43.5	- - - -	- - - -	- - - -	- - - -	- - - -	- - - -	3400	49.3	112%	113%	1500	21.8		

1. Standard factory set shown. Factory set is at the Minimum value of the range indicated. Range indicated is a percentage of Setpoint. Percentage indicated is based on the Set Pressure Range in which that setpoint resides. If non-standard sets are required, adherence must be made to constraints shown in Table 7, including Token Relief Set Range, OPSO and UPSO set range and Minimum Required difference between Token Relief and OPSO Set.
2. Minimum Token Relief values apply to -20 to 60°C / -4 to 140°F service temperatures. For service below -20°C / -4°F, add 8 mbar / 0.12 psig to the minimum Token Relief value listed.
3. Token Relief is not available for the Type CSB454.

Example: *If a non-standard setpoint is needed, see the following example for instruction in using Table 8. Non-standard setpoint = 140 mbar / 2 psig, then the factory set of the token relief will be 1.3*140 = 182 mbar / 2.6 psig. The factory OPSO and UPSO set values will be 165% of set and 50% of set, respectively, resulting is values of 231 mbar / 3.4 psig and 70 mbar / 1 psig, also respective to OPSO and UPSO.*

Capacity Information

Tables 9 through 32 provide natural gas regulating capacities at selected inlet pressures and outlet pressure settings for the CSB400 Series, which includes configurations that include the Integral Monitor and Slam-shut. Flows are in SCMH (16°C and 1.01325 bar) and SCFH (60°F and 14.7 psia) of 0.6 specific gravity natural gas. To determine equivalent capacities for air, propane, butane or nitrogen, multiply the capacity number in the tables by the following appropriate conversion factor: 0.775 for air, 0.628 for propane, 0.548 for butane or 0.789 for nitrogen. For gases of other specific gravities, multiply the given capacity by 0.775 and divide by the square root of the appropriate specific gravity.

The published capacities were obtained using inlet and outlet piping the same size as the regulator body size.

Table 9. *CSB400 Series Internal and Dual Sense (Pressure Registration) Flow Capacities for 20 mbar / 8 in. w.c. Setpoint, AC 5 Accuracy*

	ACCURACY AC 5%				
SETPOINT	**Droop**	**Boost**	**SET RANGE**	**PART NUMBER**	**COLOR**
20 mbar	-1 mbar	1 mbar	17 to 24 mbar	GE30191X012	Pink
8 in. w.c.	-0.80 in. w.c.	0.80 in. w.c.	6.8 to 9.6 in. w.c.		

INLET PRESSURE		METHOD OF DOWNSTREAM SENSE (PRESSURE REGISTRATION)													
		Internal Sense								Dual Sense (Combined Internal and External)					
		Body Outlet Size								Body Outlet Size					
		DN 25 / NPS 1		DN 32 / NPS 1-1/4		DN 40 / NPS 1-1/2		2-1/4 GAZ[1]		DN 25 / NPS 1		DN 32 / NPS 1-1/4		DN 40 / NPS 1-1/2	
bar	**psig**	**Sm³/h**	**SCFH**	**Sm³/h**	**SCFH**	**Sm³/h**	**SCFH**	**Sm³/h**	**SCFH**	**Sm³/h**	**SCFH**	**Sm³/h**	**SCFH**	**Sm³/h**	**SCFH**
0.10	1.5	26	935	28	1002	25	890	25	890	26	912	26	912	26	912
0.20	2.9	48	1680	44	1538	40	1419	60	2129	38	1348	40	1419	42	1467
0.30	4.4	79	2788	63	2240	60	2116	91	3211	60	2116	62	2190	63	2216
0.40	5.8	92	3260	99	3493	82	2911	126	4454	82	2911	86	3027	85	2998
0.50	7.3	101	3564	144	5091	126	4455	144	5091	116	4104	135	4773	136	4804
0.75	10.9	92	3257	144	5091	171	6049	144	5091	106	3751	141	4973	145	5118
1.00	14.5	81	2868	144	5091	171	6049	144	5091	94	3303	151	5326	151	5326
2.0	29	87	3073	144	5091	171	6049	144	5091	142	5021	208	7353	272	9603
3.0	44	66	2332	144	5091	171	6049	144	5091	142	5021	208	7353	312	11,029
4.0	58	66	2332	144	5091	171	6049	144	5091	142	5021	208	7353	312	11,029
5.0	73	66	2332	144	5091	171	6049	144	5091	142	5021	208	7353	312	11,029

1. External thread (DN 50 / NPS 2 pipe size).

Table 10. *CSB400 Series Internal and Dual Sense (Pressure Registration) Flow Capacities for 20 mbar / 8 in. w.c. Setpoint, AC 10 Accuracy*

	ACCURACY AC 10%				
SETPOINT	**Droop**	**Boost**	**SET RANGE**	**PART NUMBER**	**COLOR**
20 mbar	-2 mbar	2 mbar	17 to 24 mbar	GE30191X012	Pink
8 in. w.c.	-0.80 in. w.c.	0.80 in. w.c.	6.8 to 9.6 in. w.c.		

INLET PRESSURE		METHOD OF DOWNSTREAM SENSE (PRESSURE REGISTRATION)													
		Internal Sense								Dual Sense (Combined Internal and External)					
		Body Outlet Size								Body Outlet Size					
		DN 25 / NPS 1		DN 32 / NPS 1-1/4		DN 40 / NPS 1-1/2		2-1/4 GAZ[1]		DN 25 / NPS 1		DN 32 / NPS 1-1/4		DN 40 / NPS 1-1/2	
bar	**psig**	**Sm³/h**	**SCFH**	**Sm³/h**	**SCFH**	**Sm³/h**	**SCFH**	**Sm³/h**	**SCFH**	**Sm³/h**	**SCFH**	**Sm³/h**	**SCFH**	**Sm³/h**	**SCFH**
0.10	1.5	42	1483	45	1589	40	1412	40	1412	41	1447	41	1447	41	1447
0.20	2.9	71	2507	65	2295	60	2118	90	3178	57	2012	60	2118	62	2189
0.30	4.4	112	3955	90	3178	85	3001	129	4555	85	3001	88	3107	89	3143
0.40	5.8	112	3955	120	4237	100	3531	153	5403	100	3531	104	3672	103	3637
0.50	7.3	112	3955	160	5650	140	4944	160	5650	129	4555	150	5297	151	5332
0.75	10.9	112	3955	160	5650	208	7345	160	5650	129	4555	171	6038	176	6215
1.00	14.5	112	3955	160	5650	208	7345	160	5650	129	4555	208	7345	208	7345
2.0	29	112	3955	130	4590	208	7345	160	5650	183	6462	268	9464	350	12,360
3.0	44	85	3001	120	4237	208	7345	198	6992	183	6462	268	9464	402	14,196
4.0	58	85	3001	120	4237	105	3708	198	6992	183	6462	268	9464	402	14,196
5.0	73	85	3001	120	4237	105	3708	198	6992	183	6462	268	9464	402	14,196

1. External thread (DN 50 / NPS 2 pipe size).
- Gray areas indicate limited due to dynamic flow effects (Boost).

Table 11. *CSB400 Series Internal and Dual Sense (Pressure Registration) Flow Capacities for 30 mbar / 12 in. w.c. Setpoint, AC 5 Accuracy*

	ACCURACY AC 5%				
SETPOINT	**Droop**	**Boost**	**SET RANGE**	**PART NUMBER**	**COLOR**
30 mbar	-1.5 mbar	1.5 mbar	24 to 35 mbar	GE43955X012	Orange Stripe
12 in. w.c.	-0.80 in. w.c.	0.80 in. w.c.	9.6 to 14 in. w.c.		

INLET PRESSURE		METHOD OF DOWNSTREAM SENSE (PRESSURE REGISTRATION)													
		Internal Sense								Dual Sense (Combined Internal and External)					
		Body Outlet Size								Body Outlet Size					
		DN 25 / NPS 1		DN 32 / NPS 1-1/4		DN 40 / NPS 1-1/2		2-1/4 GAZ[1]		DN 25 / NPS 1		DN 32 / NPS 1-1/4		DN 40 / NPS 1-1/2	
bar	**psig**	**Sm³/h**	**SCFH**	**Sm³/h**	**SCFH**	**Sm³/h**	**SCFH**	**Sm³/h**	**SCFH**	**Sm³/h**	**SCFH**	**Sm³/h**	**SCFH**	**Sm³/h**	**SCFH**
0.10	1.5	33	1180	34	1202	35	1247	35	1247	28	1002	31	1091	35	1224
0.20	2.9	61	2153	54	1893	57	2011	64	2272	50	1774	51	1798	54	1893
0.30	4.4	83	2938	81	2863	81	2863	84	2962	67	2364	67	2364	73	2589
0.40	5.8	107	3784	111	3930	116	4104	120	4221	95	3348	95	3348	101	3580
0.50	7.3	117	4136	144	5091	144	5091	152	5377	124	4391	124	4391	132	4677
0.75	10.9	117	4136	152	5380	169	5962	152	5377	140	4944	152	5380	158	5584
1.00	14.5	117	4136	152	5380	169	5962	152	5377	123	4353	152	5378	152	5378
2.0	29	117	4136	152	5380	169	5962	165	5816	243	8560	264	9328	266	9383
3.0	44	117	4136	152	5380	169	5962	167	5899	264	9328	295	10,426	311	10,974
4.0	58	117	4136	152	5380	169	5962	187	6585	264	9328	295	10,426	311	10,974
5.0	73	117	4136	152	5380	169	5962	187	6585	232	8176	295	10,426	311	10,974

1. External thread (DN 50 / NPS 2 pipe size).

Table 12. *CSB400 Series Internal and Dual Sense (Pressure Registration) Flow Capacities for 30 mbar / 12 in. w.c. Setpoint, AC 10 Accuracy*

	ACCURACY AC 10%				
SETPOINT	**Droop**	**Boost**	**SET RANGE**	**PART NUMBER**	**COLOR**
30 mbar	-3 mbar	3 mbar	24 to 35 mbar	GE43955X012	Orange Stripe
12 in. w.c.	-1.2 in. w.c.	1.2 in. w.c.	9.6 to 14 in. w.c.		

INLET PRESSURE		METHOD OF DOWNSTREAM SENSE (PRESSURE REGISTRATION)													
		Internal Sense								Dual Sense (Combined Internal and External)					
		Body Outlet Size								Body Outlet Size					
		DN 25 / NPS 1		DN 32 / NPS 1-1/4		DN 40 / NPS 1-1/2		2-1/4 GAZ[1]		DN 25 / NPS 1		DN 32 / NPS 1-1/4		DN 40 / NPS 1-1/2	
bar	**psig**	**Sm³/h**	**SCFH**	**Sm³/h**	**SCFH**	**Sm³/h**	**SCFH**	**Sm³/h**	**SCFH**	**Sm³/h**	**SCFH**	**Sm³/h**	**SCFH**	**Sm³/h**	**SCFH**
0.10	1.5	53	1871	54	1906	56	1977	56	1977	45	1589	49	1730	55	1942
0.20	2.9	91	3213	80	2825	85	3001	96	3390	75	2648	76	2683	80	2825
0.30	4.4	118	4167	115	4061	115	4061	119	4202	95	3354	95	3354	104	3672
0.40	5.8	130	4590	135	4767	141	4979	145	5120	115	4061	115	4061	123	4343
0.50	7.3	130	4590	160	5650	160	5650	169	5968	138	4873	138	4873	147	5191
0.75	10.9	130	4590	185	6533	205	7239	169	5968	170	6003	185	6533	192	6780
1.00	14.5	130	4590	185	6533	205	7239	194	6851	170	6003	210	7416	210	7416
2.0	29	130	4590	185	6533	205	7239	212	7486	312	11,018	340	12,006	342	12,077
3.0	44	100	3531	165	5826	105	3708	215	7592	340	12,006	380	13,419	400	14,125
4.0	58	100	3531	155	5473	105	3708	240	8475	340	12,006	380	13,419	400	14,125
5.0	73	100	3531	155	5473	105	3708	240	8475	298	10,523	380	13,419	400	14,125

1. External thread (DN 50 / NPS 2 pipe size).
- Gray areas indicate limited capacities due to boost effects.

Table 13. *CSB400 Series Internal and Dual Sense (Pressure Registration) Flow Capacities for 50 mbar / 20 in. w.c. Setpoint, AC 5 Accuracy*

	ACCURACY AC 5%				
SETPOINT	**Droop**	**Boost**	**SET RANGE**	**PART NUMBER**	**COLOR**
50 mbar	-2.5 mbar	2.5 mbar	35 to 60 mbar	GE30201X012	Dark Green
20 in. w.c.	-2.0 in. w.c.	2.0 in. w.c.	14 to 24 in. w.c.		

INLET PRESSURE		METHOD OF DOWNSTREAM SENSE (PRESSURE REGISTRATION)													
		Internal Sense								Dual Sense (Combined Internal and External)					
		Body Outlet Size								Body Outlet Size					
		DN 25 / NPS 1		DN 32 / NPS 1-1/4		DN 40 / NPS 1-1/2		2-1/4 GAZ[1]		DN 25 / NPS 1		DN 32 / NPS 1-1/4		DN 40 / NPS 1-1/2	
bar	**psig**	**Sm^3/h**	**SCFH**	**Sm^3/h**	**SCFH**	**Sm^3/h**	**SCFH**	**Sm^3/h**	**SCFH**	**Sm^3/h**	**SCFH**	**Sm^3/h**	**SCFH**	**Sm^3/h**	**SCFH**
0.10	1.5	21	735	16	556	19	668	20	712	19	668	18	623	16	579
0.20	2.9	39	1372	34	1183	33	1159	38	1325	34	1183	31	1088	34	1183
0.30	4.4	61	2166	46	1618	51	1817	56	1992	49	1717	49	1743	45	1593
0.40	5.8	94	3318	70	2474	67	2358	82	2911	70	2474	67	2358	68	2386
0.50	7.3	126	4455	95	3341	92	3245	135	4773	92	3245	88	3118	88	3118
0.75	10.9	161	5671	128	4507	115	4072	169	5962	120	4245	110	3867	106	3751
1.00	14.5	141	4993	149	5249	133	4686	207	7298	143	5044	118	4174	107	3790
2.0	29	152	5350	233	8231	253	8917	253	8917	283	9987	223	7874	225	7957
3.0	44	152	5350	233	8231	253	8917	268	9465	283	9987	346	12,210	365	12,895
4.0	58	146	5158	233	8231	253	8917	268	9465	283	9987	346	12,210	365	12,895
5.0	73	146	5158	233	8231	253	8917	268	9465	283	9987	346	12,210	365	12,895

1. External thread (DN 50 / NPS 2 pipe size).

Table 14. *CSB400 Series Internal and Dual Sense (Pressure Registration) Flow Capacities for 50 mbar / 20 in. w.c. Setpoint, AC 10 Accuracy*

	ACCURACY AC 10%				
SETPOINT	**Droop**	**Boost**	**SET RANGE**	**PART NUMBER**	**COLOR**
50 mbar	-5 mbar	5 mbar	35 to 60 mbar	GE30201X012	Dark Green
20 in. w.c.	-2.0 in. w.c.	2.0 in. w.c.	14 to 24 in. w.c.		

INLET PRESSURE		METHOD OF DOWNSTREAM SENSE (PRESSURE REGISTRATION)													
		Internal Sense								Dual Sense (Combined Internal and External)					
		Body Outlet Size								Body Outlet Size					
		DN 25 / NPS 1		DN 32 / NPS 1-1/4		DN 40 / NPS 1-1/2		2-1/4 GAZ[1]		DN 25 / NPS 1		DN 32 / NPS 1-1/4		DN 40 / NPS 1-1/2	
bar	**psig**	**Sm^3/h**	**SCFH**	**Sm^3/h**	**SCFH**	**Sm^3/h**	**SCFH**	**Sm^3/h**	**SCFH**	**Sm^3/h**	**SCFH**	**Sm^3/h**	**SCFH**	**Sm^3/h**	**SCFH**
0.10	1.5	33	1165	25	882	30	1059	32	1130	30	1059	28	988	26	918
0.20	2.9	58	2048	50	1765	49	1730	56	1977	50	1765	46	1624	50	1765
0.30	4.4	87	3072	65	2295	73	2577	80	2825	69	2436	70	2472	64	2260
0.40	5.8	114	4025	85	3001	81	2860	100	3531	85	3001	81	2860	82	2895
0.50	7.3	140	4944	105	3708	102	3602	150	5297	102	3602	98	3460	98	3460
0.75	10.9	195	6886	155	5473	140	4944	205	7239	146	5155	133	4696	129	4555
1.00	14.5	195	6886	205	7239	183	6462	285	10,064	197	6956	163	5756	148	5226
2.0	29	195	6886	300	10,594	325	11,477	325	11,477	364	12,854	287	10,135	290	10,241
3.0	44	195	6886	300	10,594	325	11,477	345	12,183	364	12,854	445	15,715	470	16,597
4.0	58	188	6639	300	10,594	325	11,477	345	12,183	364	12,854	445	15,715	470	16,597
5.0	73	188	6639	300	10,594	325	11,477	345	12,183	364	12,854	445	15,715	470	16,597

1. External thread (DN 50 / NPS 2 pipe size).
- Gray areas indicate limited capacities due to boost effects.

Table 15. *CSB400 Series Internal and Dual Sense (Pressure Registration) Flow Capacities for 75 mbar / 30 in. w.c. Setpoint, AC 5 Accuracy*

	ACCURACY AC 5%				
SETPOINT	**Droop**	**Boost**	**SET RANGE**	**PART NUMBER**	**COLOR**
75 mbar	-3.25 mbar	3.25 mbar	54 to 100 mbar	GE30202X012	Tan
30 in. w.c.	-3.0 in. w.c.	3.0 in. w.c.	21.7 to 40 in. w.c.		

INLET PRESSURE		**METHOD OF DOWNSTREAM SENSE (PRESSURE REGISTRATION)**													
		Internal Sense								**Dual Sense (Combined Internal and External)**					
		Body Outlet Size								**Body Outlet Size**					
		DN 25 / NPS 1		**DN 32 / NPS 1-1/4**		**DN 40 / NPS 1-1/2**		**2-1/4 GAZ[1]**		**DN 25 / NPS 1**		**DN 32 / NPS 1-1/4**		**DN 40 / NPS 1-1/2**	
bar	**psig**	**Sm³/h**	**SCFH**	**Sm³/h**	**SCFH**	**Sm³/h**	**SCFH**	**Sm³/h**	**SCFH**	**Sm³/h**	**SCFH**	**Sm³/h**	**SCFH**	**Sm³/h**	**SCFH**
0.20	2.9	42	1469	42	1492	41	1447	52	1825	41	1447	41	1447	38	1335
0.30	4.4	66	2343	60	2129	58	2035	78	2745	59	2082	60	2129	56	1987
0.40	5.8	134	4730	81	2863	73	2564	102	3585	78	2763	79	2788	72	2539
0.50	7.3	129	4541	111	3930	106	3726	156	5502	107	3784	107	3784	99	3493
0.75	10.9	186	6554	171	6045	151	5313	228	8050	156	5504	156	5504	145	5122
1.00	14.5	208	7329	203	7183	182	6427	255	9015	178	6281	178	6281	167	5903
2.0	29	183	6453	272	9603	278	9808	266	9373	266	9398	266	9398	261	9219
3.0	44	196	6914	291	10,289	298	10,508	315	11,112	285	10,069	285	10,069	382	13,471
4.0	58	196	6914	291	10,289	298	10,508	334	11,798	285	10,069	285	10,069	382	13,471
5.0	73	173	6090	291	10,289	298	10,508	334	11,798	285	10,069	285	10,069	382	13,471

1. External thread (DN 50 / NPS 2 pipe size).

Table 16. *CSB400 Series Internal and Dual Sense (Pressure Registration) Flow Capacities for 75 mbar / 30 in. w.c. Setpoint, AC 10 Accuracy*

	ACCURACY AC 10%				
SETPOINT	**Droop**	**Boost**	**SET RANGE**	**PART NUMBER**	**COLOR**
75 mbar	-7.5 mbar	7.5 mbar	54 to 100 mbar	GE30202X012	Tan
30 in. w.c.	-3.0 in. w.c.	3.0 in. w.c.	21.7 to 40 in. w.c.		

INLET PRESSURE		**METHOD OF DOWNSTREAM SENSE (PRESSURE REGISTRATION)**													
		Internal Sense								**Dual Sense (Combined Internal and External)**					
		Body Outlet Size								**Body Outlet Size**					
		DN 25 / NPS 1		**DN 32 / NPS 1-1/4**		**DN 40 / NPS 1-1/2**		**2-1/4 GAZ[1]**		**DN 25 / NPS 1**		**DN 32 / NPS 1-1/4**		**DN 40 / NPS 1-1/2**	
bar	**psig**	**Sm³/h**	**SCFH**	**Sm³/h**	**SCFH**	**Sm³/h**	**SCFH**	**Sm³/h**	**SCFH**	**Sm³/h**	**SCFH**	**Sm³/h**	**SCFH**	**Sm³/h**	**SCFH**
0.20	2.9	66	2330	67	2366	65	2295	82	2895	65	2295	65	2295	60	2118
0.30	4.4	99	3496	90	3178	86	3037	116	4096	88	3107	90	3178	84	2966
0.40	5.8	190	6709	115	4061	103	3637	144	5085	111	3919	112	3955	102	3602
0.50	7.3	156	5509	135	4767	128	4520	189	6674	130	4590	130	4590	120	4237
0.75	10.9	206	7274	190	6709	167	5897	253	8934	173	6109	173	6109	161	5685
1.00	14.5	252	8899	247	8722	221	7804	310	10,947	216	7627	216	7627	203	7168
2.0	29	252	8899	375	13,243	383	13,525	366	12,925	367	12,960	367	12,960	360	12,713
3.0	44	252	8899	375	13,243	383	13,525	405	14,302	367	12,960	367	12,960	491	17,339
4.0	58	252	8899	375	13,243	383	13,525	430	15,185	367	12,960	367	12,960	491	17,339
5.0	73	222	7839	375	13,243	383	13,525	430	15,185	367	12,960	367	12,960	491	17,339

1. External thread (DN 50 / NPS 2 pipe size).
- Gray areas indicate limited capacities due to boost effects.

Table 17. *CSB400 Series Internal and Dual Sense (Pressure Registration) Flow Capacities for 100 mbar / 40 in. w.c. Setpoint, AC 5 Accuracy*

	ACCURACY AC 5%				
SETPOINT	**Droop**	**Boost**	**SET RANGE**	**PART NUMBER**	**COLOR**
100 mbar	-5.0 mbar	5.0 mbar	54 to 100 mbar	GE30202X012	Tan
40 in. w.c.	-2.0 in. w.c.	2.0 in. w.c.	21.7 to 40 in. w.c.		

INLET PRESSURE		METHOD OF DOWNSTREAM SENSE (PRESSURE REGISTRATION)													
		Internal Sense								Dual Sense (Combined Internal and External)					
		Body Outlet Size								Body Outlet Size					
		DN 25 / NPS 1		DN 32 / NPS 1-1/4		DN 40 / NPS 1-1/2		2-1/4 GAZ[1]		DN 25 / NPS 1		DN 32 / NPS 1-1/4		DN 40 / NPS 1-1/2	
bar	**psig**	**Sm^3/h**	**SCFH**	**Sm^3/h**	**SCFH**	**Sm^3/h**	**SCFH**	**Sm^3/h**	**SCFH**	**Sm^3/h**	**SCFH**	**Sm^3/h**	**SCFH**	**Sm^3/h**	**SCFH**
0.20	2.9	41	1447	36	1271	38	1341	32	1130	40	1412	37	1306	34	1200
0.30	4.4	65	2295	56	1977	53	1871	45	1589	60	2118	60	2118	51	1801
0.40	5.8	86	3037	73	2577	69	2436	54	1906	75	2648	72	2542	63	2224
0.50	7.3	122	4308	93	3284	83	2931	59	2083	94	3319	84	2966	75	2648
0.75	10.9	182	6427	135	4767	120	4237	110	3884	135	4767	118	4167	107	3778
1.00	14.5	182	6427	180	6356	155	5473	265	9358	180	6356	151	5332	131	4626
2.0	29	182	6427	295	10,417	348	12,289	380	13,419	330	11,653	281	9923	253	8934
3.0	44	195	6886	295	10,417	348	12,289	436	15,397	330	11,653	420	14,832	420	14,832
4.0	58	195	6886	295	10,417	348	12,289	440	15,538	330	11,653	420	14,832	440	15,538
5.0	73	195	6886	295	10,417	348	12,289	440	15,538	330	11,653	420	14,832	440	15,538

1. External thread (DN 50 / NPS 2 pipe size).

Table 18. *CSB400 Series Internal and Dual Sense (Pressure Registration) Flow Capacities for 100 mbar / 40 in. w.c. Setpoint, AC 10 Accuracy*

	ACCURACY AC 10%				
SETPOINT	**Droop**	**Boost**	**SET RANGE**	**PART NUMBER**	**COLOR**
100 mbar	-10 mbar	10 mbar	54 to 100 mbar	GE30202X012	Tan
40 in. w.c.	-4.0 in. w.c.	4.0 in. w.c.	21.7 to 40 in. w.c.		

INLET PRESSURE		METHOD OF DOWNSTREAM SENSE (PRESSURE REGISTRATION)													
		Internal Sense								Dual Sense (Combined Internal and External)					
		Body Outlet Size								Body Outlet Size					
		DN 25 / NPS 1		DN 32 / NPS 1-1/4		DN 40 / NPS 1-1/2		2-1/4 GAZ[1]		DN 25 / NPS 1		DN 32 / NPS 1-1/4		DN 40 / NPS 1-1/2	
bar	**psig**	**Sm^3/h**	**SCFH**	**Sm^3/h**	**SCFH**	**Sm^3/h**	**SCFH**	**Sm^3/h**	**SCFH**	**Sm^3/h**	**SCFH**	**Sm^3/h**	**SCFH**	**Sm^3/h**	**SCFH**
0.20	2.9	65	2295	60	2118	38	1341	54	1906	64	2260	65	2295	66	2330
0.30	4.4	97	3425	96	3390	53	1871	74	2613	94	3319	100	3531	94	3319
0.40	5.8	122	4308	121	4273	69	2436	102	3602	114	4025	121	4273	119	4202
0.50	7.3	148	5226	156	5509	83	2931	123	4343	141	4979	143	5049	137	4838
0.75	10.9	202	7133	204	7204	120	4237	212	7486	189	6674	194	6851	183	6462
1.00	14.5	221	7804	257	9075	155	5473	300	10,594	229	8087	238	8404	222	7839
2.0	29	251	8863	445	15,715	348	12,289	478	16,880	366	12,925	407	14,373	373	13,172
3.0	44	251	8863	460	16,244	478	16,880	478	16,880	513	18,116	515	18,187	515	18,187
4.0	58	251	8863	460	16,244	520	18,363	520	18,363	513	18,116	570	20,129	646	22,813
5.0	73	251	8863	460	16,244	568	20,058	580	20,482	513	18,116	570	20,129	646	22,813

1. External thread (DN 50 / NPS 2 pipe size).

Table 19. *CSB400 Series Internal and Dual Sense (Pressure Registration) Flow Capacities for 150 mbar / 2.2 psig Setpoint, AC 5 Accuracy*

	ACCURACY AC 5%				
SETPOINT	**Droop**	**Boost**	**SET RANGE**	**PART NUMBER**	**COLOR**
150 mbar	-7.5 mbar	7.5 mbar	100 to 160 mbar	GE35081X012	Purple Stripe
2.2 psig	-3.0 in. w.c.	3.0 in. w.c.	1.45 to 2.3 psig		

INLET PRESSURE		**METHOD OF DOWNSTREAM SENSE (PRESSURE REGISTRATION)**													
		Internal Sense								**Dual Sense (Combined Internal and External)**					
		Body Outlet Size								**Body Outlet Size**					
		DN 25 / NPS 1		**DN 32 / NPS 1-1/4**		**DN 40 / NPS 1-1/2**		**2-1/4 GAZ[1]**		**DN 25 / NPS 1**		**DN 32 / NPS 1-1/4**		**DN 40 / NPS 1-1/2**	
bar	**psig**	**Sm^3/h**	**SCFH**	**Sm^3/h**	**SCFH**	**Sm^3/h**	**SCFH**	**Sm^3/h**	**SCFH**	**Sm^3/h**	**SCFH**	**Sm^3/h**	**SCFH**	**Sm^3/h**	**SCFH**
0.30	4.4	71	2507	65	2295	62	2189	65	2295	65	2295	67	2366	68	2401
0.40	5.8	99	3496	85	3001	86	3037	95	3354	86	3037	84	2966	80	2825
0.50	7.3	130	4590	105	3708	105	3708	125	4414	108	3813	108	3813	99	3496
0.75	10.9	196	6921	165	5826	155	5473	200	7062	153	5403	152	5367	135	4767
1.00	14.5	245	8652	215	7592	190	6709	265	9358	200	7062	190	6709	177	6250
2.0	29	272	9605	340	12,006	344	12,148	365	12,889	347	12,254	356	12,572	279	9852
3.0	44	253	8934	415	14,655	425	15,008	410	14,479	475	16,774	490	17,304	490	17,304
4.0	58	215	7592	415	14,655	425	15,008	425	15,008	475	16,774	490	17,304	520	18,363
5.0	73	215	7592	375	13,243	425	15,008	425	15,008	475	16,774	490	17,304	520	18,363

1. External thread (DN 50 / NPS 2 pipe size).
- Gray areas indicate limited capacities due to boost effects.

Table 20. *CSB400 Series Internal and Dual Sense (Pressure Registration) Flow Capacities for 150 mbar / 2.2 psig Setpoint, AC 10 Accuracy*

	ACCURACY AC 10%				
SETPOINT	**Droop**	**Boost**	**SET RANGE**	**PART NUMBER**	**COLOR**
150 mbar	-15 mbar	15 mbar	100 to 160 mbar	GE35081X012	Purple Stripe
2.2 psig	-0.22 psig	0.22 psig	1.45 to 2.3 psig		

INLET PRESSURE		**METHOD OF DOWNSTREAM SENSE (PRESSURE REGISTRATION)**													
		Internal Sense								**Dual Sense (Combined Internal and External)**					
		Body Outlet Size								**Body Outlet Size**					
		DN 25 / NPS 1		**DN 32 / NPS 1-1/4**		**DN 40 / NPS 1-1/2**		**2-1/4 GAZ[1]**		**DN 25 / NPS 1**		**DN 32 / NPS 1-1/4**		**DN 40 / NPS 1-1/2**	
bar	**psig**	**Sm^3/h**	**SCFH**	**Sm^3/h**	**SCFH**	**Sm^3/h**	**SCFH**	**Sm^3/h**	**SCFH**	**Sm^3/h**	**SCFH**	**Sm^3/h**	**SCFH**	**Sm^3/h**	**SCFH**
0.30	4.4	97	3425	100	3531	105	3708	95	3354	96	3390	97	3425	104	3672
0.40	5.8	126	4449	130	4590	122	4308	130	4590	123	4343	124	4379	119	4202
0.50	7.3	151	5332	160	5650	151	5332	160	5650	146	5155	150	5297	143	5049
0.75	10.9	200	7062	210	7416	196	6921	215	7592	200	7062	207	7310	189	6674
1.00	14.5	247	8722	255	9005	228	8051	265	9358	243	8581	261	9217	223	7875
2.0	29	316	11,159	445	15,715	354	12,501	445	15,715	354	12,501	439	15,503	311	10,982
3.0	44	316	11,159	520	18,363	560	19,776	475	16,774	516	18,222	520	18,363	528	18,646
4.0	58	316	11,159	520	18,363	560	19,776	530	18,716	516	18,222	520	18,363	528	18,646
5.0	73	316	11,159	520	18,363	560	19,776	590	20,835	516	18,222	520	18,363	528	18,646

1. External thread (DN 50 / NPS 2 pipe size).

Table 21. *CSB400 Series Internal and Dual Sense (Pressure Registration) Flow Capacities for 300 mbar / 4.4 psig Setpoint, AC 5 Accuracy*

	ACCURACY AC 5%				
SETPOINT	**Droop**	**Boost**	**SET RANGE**	**PART NUMBER**	**COLOR**
300 mbar	-15 mbar	15 mbar	138 to 300 mbar	GE30192X012	Dark Blue
4.4 psig	-0.2 psig	0.2 psig	2.0 to 4.4 psig		

INLET PRESSURE		METHOD OF DOWNSTREAM SENSE (PRESSURE REGISTRATION)													
		Internal Sense								Dual Sense (Combined Internal and External)					
		Body Outlet Size								Body Outlet Size					
		DN 25 / NPS 1		DN 32 / NPS 1-1/4		DN 40 / NPS 1-1/2		2-1/4 GAZ[1]		DN 25 / NPS 1		DN 32 / NPS 1-1/4		DN 40 / NPS 1-1/2	
bar	**psig**	**Sm^3/h**	**SCFH**	**Sm^3/h**	**SCFH**	**Sm^3/h**	**SCFH**	**Sm^3/h**	**SCFH**	**Sm^3/h**	**SCFH**	**Sm^3/h**	**SCFH**	**Sm^3/h**	**SCFH**
0.40	5.8	64	2260	65	2295	60	2118	55	1942	65	2295	66	2330	55	1942
0.50	7.3	87	3072	90	3178	84	2966	85	3001	85	3001	87	3072	83	2931
0.75	10.9	145	5120	140	4944	131	4626	130	4590	128	4520	135	4767	128	4520
1.00	14.5	206	7274	175	6180	168	5932	190	6709	166	5862	170	6003	163	5756
2.0	29	392	13,843	375	13,243	325	11,477	440	15,538	290	10,241	330	11,653	305	10,770
3.0	44	468	16,527	580	20,482	512	18,081	580	20,482	423	14,938	435	15,361	440	15,538
4.0	58	468	16,527	580	20,482	580	20,482	580	20,482	423	14,938	468	16,527	500	17,657
5.0	73	469	16,562	580	20,482	580	20,482	580	20,482	423	14,938	468	16,527	500	17,657

1. External thread (DN 50 / NPS 2 pipe size).

Table 22. *CSB400 Series Internal and Dual Sense (Pressure Registration) Flow Capacities for 300 mbar / 4.4 psig Setpoint, AC 10 Accuracy*

	ACCURACY AC 10%				
SETPOINT	**Droop**	**Boost**	**SET RANGE**	**PART NUMBER**	**COLOR**
300 mbar	-30 mbar	30 mbar	138 to 300 mbar	GE30192X012	Dark Blue
4.4 psig	-0.4 psig	0.4 psig	2.0 to 4.4 psig		

INLET PRESSURE		METHOD OF DOWNSTREAM SENSE (PRESSURE REGISTRATION)													
		Internal Sense								Dual Sense (Combined Internal and External)					
		Body Outlet Size								Body Outlet Size					
		DN 25 / NPS 1		DN 32 / NPS 1-1/4		DN 40 / NPS 1-1/2		2-1/4 GAZ[1]		DN 25 / NPS 1		DN 32 / NPS 1-1/4		DN 40 / NPS 1-1/2	
bar	**psig**	**Sm^3/h**	**SCFH**	**Sm^3/h**	**SCFH**	**Sm^3/h**	**SCFH**	**Sm^3/h**	**SCFH**	**Sm^3/h**	**SCFH**	**Sm^3/h**	**SCFH**	**Sm^3/h**	**SCFH**
0.40	5.8	100	3531	100	3531	96	3390	100	3531	99	3496	107	3778	98	3460
0.50	7.3	125	4414	135	4767	126	4449	125	4414	126	4449	137	4838	114	4025
0.75	10.9	183	6462	195	6886	175	6180	190	6709	184	6497	197	6956	167	5897
1.00	14.5	234	8263	250	8828	224	7910	255	9005	229	8087	245	8652	208	7345
2.0	29	397	14,019	435	15,361	372	13,137	450	15,891	380	13,419	418	14,761	363	12,819
3.0	44	515	18,187	525	18,540	552	19,493	615	21,718	496	17,516	587	20,729	541	19,105
4.0	58	605	21,365	610	21,541	705	24,896	720	25,426	615	21,718	620	21,895	676	23,872
5.0	73	605	21,365	610	21,541	705	24,896	720	25,426	615	21,718	620	21,895	676	23,872

1. External thread (DN 50 / NPS 2 pipe size).

Table 23. *CSB400 Series Internal and Dual Sense (Pressure Registration) Flow Capacities for 500 mbar / 7.3 psig Setpoint, AC 5 Accuracy*

	ACCURACY AC 5%				
SETPOINT	**Droop**	**Boost**	**SET RANGE**	**PART NUMBER**	**COLOR**
500 mbar	-25 mbar	25 mbar	276 to 517 mbar	GE33121X012	Red
7.3 psig	-0.36 psig	0.36 psig	4 to 7.5 psig		

INLET PRESSURE		METHOD OF DOWNSTREAM SENSE (PRESSURE REGISTRATION)											
		Internal Sense						Dual Sense (Combined Internal and External)					
		Body Outlet Size						Body Outlet Size					
		DN 25 / NPS 1		DN 32 / NPS 1-1/4		DN 40 / NPS 1-1/2		DN 25 / NPS 1		DN 32 / NPS 1-1/4		DN 40 / NPS 1-1/2	
bar	**psig**	**Sm^3/h**	**SCFH**	**Sm^3/h**	**SCFH**	**Sm^3/h**	**SCFH**	**Sm^3/h**	**SCFH**	**Sm^3/h**	**SCFH**	**Sm^3/h**	**SCFH**
0.75	10.9	113	3990	116	4096	123	4343	109	3849	115	4061	114	4025
1.00	14.5	170	6003	165	5826	160	5650	155	5473	164	5791	159	5615
2.0	29	385	13,596	341	12,042	320	11,300	302	10,665	336	11,865	311	10,982
3.0	44	518	18,292	530	18,716	502	17,727	385	13,596	509	17,975	465	16,421
4.0	58	660	23,307	692	24,437	638	22,530	522	18,434	656	23,166	600	21,188
5.0	73	660	23,307	770	27,192	800	28,251	625	22,071	823	29,063	765	27,015
8.0	116	433	15,291	770	27,192	800	28,251	650	22,954	823	29,063	845	29,840
10	145	420	14,832	770	27,192	800	28,251	650	22,954	823	29,063	845	29,840
12	174	420	14,832	770	27,192	800	28,251	650	22,954	823	29,063	845	29,840
16	232	408	14,408	770	27,192	800	28,251	650	22,954	823	29,063	845	29,840
▭ - Gray areas indicate limited capacities due to boost effects.													

Table 24. *CSB400 Series Internal and Dual Sense (Pressure Registration) Flow Capacities for 500 mbar / 7.3 psig Setpoint, AC 10 Accuracy*

	ACCURACY AC 10%				
SETPOINT	**Droop**	**Boost**	**SET RANGE**	**PART NUMBER**	**COLOR**
500 mbar	-50 mbar	50 mbar	276 to 517 mbar	GE33121X012	Red
7.3 psig	-0.7 psig	0.7 psig	4 to 7.5 psig		

INLET PRESSURE		METHOD OF DOWNSTREAM SENSE (PRESSURE REGISTRATION)											
		Internal Sense						Dual Sense (Combined Internal and External)					
		Body Outlet Size						Body Outlet Size					
		DN 25 / NPS 1		DN 32 / NPS 1-1/4		DN 40 / NPS 1-1/2		DN 25 / NPS 1		DN 32 / NPS 1-1/4		DN 40 / NPS 1-1/2	
bar	**psig**	**Sm^3/h**	**SCFH**	**Sm^3/h**	**SCFH**	**Sm^3/h**	**SCFH**	**Sm^3/h**	**SCFH**	**Sm^3/h**	**SCFH**	**Sm^3/h**	**SCFH**
0.75	10.9	155	5473	169	5968	153	5403	159	5615	169	5968	165	5826
1.0	14.5	215	7592	231	8157	206	7274	210	7416	231	8157	210	7416
2.0	29	408	14,408	424	14,973	387	13,666	373	13,172	416	14,690	374	13,207
3.0	44	528	18,646	602	21,259	545	19,246	482	17,021	539	19,034	545	19,246
4.0	58	615	21,718	754	26,627	673	23,766	604	21,330	752	26,556	704	24,861
5.0	73	615	21,718	820	28,958	852	30,088	701	24,755	922	32,560	856	30,229
8.0	116	615	21,718	820	28,958	905	31,959	701	24,755	922	32,560	955	33,725
10	145	600	21,188	820	28,958	905	31,959	701	24,755	922	32,560	955	33,725
12	174	600	21,188	820	28,958	905	31,959	701	24,755	922	32,560	955	33,725
16	232	595	21,012	820	28,958	905	31,959	701	24,755	922	32,560	955	33,725
▭ - Gray areas indicate limited capacities due to boost effects.													

Table 25. *CSB400 Series Internal and Dual Sense (Pressure Registration) Flow Capacities for 0.75 bar / 10.9 psig Setpoint, AC 5 Accuracy*

	ACCURACY AC 5%				
SETPOINT	**Droop**	**Boost**	**SET RANGE**	**PART NUMBER**	**COLOR**
0.75 bar	-37.5 mbar	37.5 mbar	0.50 to 1.00 bar	GE30203X012	Light Blue
10.9 psig	-0.5 psig	0.5 psig	7.3 to 14.5 psig		

INLET PRESSURE		METHOD OF DOWNSTREAM SENSE (PRESSURE REGISTRATION)											
		Internal Sense						Dual Sense (Combined Internal and External)					
		Body Outlet Size						Body Outlet Size					
		DN 25 / NPS 1		DN 32 / NPS 1-1/4		DN 40 / NPS 1-1/2		DN 25 / NPS 1		DN 32 / NPS 1-1/4		DN 40 / NPS 1-1/2	
bar	**psig**	**Sm^3/h**	**SCFH**	**Sm^3/h**	**SCFH**	**Sm^3/h**	**SCFH**	**Sm^3/h**	**SCFH**	**Sm^3/h**	**SCFH**	**Sm^3/h**	**SCFH**
1.00	14.5	58	2048	64	2260	60	2118	55	1942	69	2436	60	2118
2.0	29	117	4131	135	4767	115	4061	117	4131	142	5014	137	4838
3.0	44	205	7239	192	6780	180	6356	160	5650	197	6956	182	6427
4.0	58	335	11,830	269	9499	240	8475	215	7592	270	9534	261	9217
5.0	73	650	22,954	350	12,360	365	12,889	319	11,265	345	12,183	332	11,724
8.0	116	705	24,896	795	28,075	640	22,601	555	19,599	450	15,891	537	18,963
10	145	705	24,896	795	28,075	700	24,720	760	26,839	485	17,127	650	22,954
12	174	705	24,896	795	28,075	525	18,540	760	26,839	310	10,947	525	18,540
16	232	705	24,896	795	28,075	525	18,540	760	26,839	225	7945	525	18,540
- Gray areas indicate limited capacities due to boost effects.													

Table 26. *CSB400 Series Internal and Dual Sense (Pressure Registration) Flow Capacities for 0.75 bar / 10.9 psig Setpoint, AC 10 Accuracy*

	ACCURACY AC 10%				
SETPOINT	**Droop**	**Boost**	**SET RANGE**	**PART NUMBER**	**COLOR**
0.75 bar	-75 mbar	75 mbar	0.50 to 1.00 bar	GE30203X012	Light Blue
10.9 psig	-1.1 psig	1.1 psig	7.3 to 14.5 psig		

INLET PRESSURE		METHOD OF DOWNSTREAM SENSE (PRESSURE REGISTRATION)											
		Internal Sense						Dual Sense (Combined Internal and External)					
		Body Outlet Size						Body Outlet Size					
		DN 25 / NPS 1		DN 32 / NPS 1-1/4		DN 40 / NPS 1-1/2		DN 25 / NPS 1		DN 32 / NPS 1-1/4		DN 40 / NPS 1-1/2	
bar	**psig**	**Sm^3/h**	**SCFH**	**Sm^3/h**	**SCFH**	**Sm^3/h**	**SCFH**	**Sm^3/h**	**SCFH**	**Sm^3/h**	**SCFH**	**Sm^3/h**	**SCFH**
1.00	14.5	117	4131	130	4590	121	4273	111	3919	132	4661	120	4237
2.0	29	257	9075	265	9358	240	8475	230	8122	267	9429	257	9075
3.0	44	425	15,008	395	13,949	360	12,713	349	12,324	392	13,843	380	13,419
4.0	58	616	21,753	585	20,659	470	16,597	463	16,350	515	18,187	492	17,374
5.0	73	806	28,463	718	25,355	640	22,601	615	21,718	645	22,777	600	21,188
8.0	116	806	28,463	885	31,253	985	34,784	890	31,430	935	33,019	930	32,842
10	145	806	28,463	885	31,253	985	34,784	890	31,430	935	33,019	930	32,842
12	174	806	28,463	885	31,253	985	34,784	890	31,430	935	33,019	930	32,842
16	232	885	31,253	885	31,253	170	6003	890	31,430	935	33,019	930	32,842
- Gray areas indicate limited capacities due to boost effects.													

Table 27. *CSB400 Series Internal and Dual Sense (Pressure Registration) Flow Capacities for 1.00 bar / 14.5 psig Setpoint, AC 5 Accuracy*

	ACCURACY AC 5%				
SETPOINT	**Droop**	**Boost**	**SET RANGE**	**PART NUMBER**	**COLOR**
1.00 bar	-50 mbar	50 mbar	0.50 to 1.00 bar	GE30203X012	Light Blue
14.5 psig	-0.7 psig	0.7 psig	7.3 to 14.5 psig		

INLET PRESSURE		METHOD OF DOWNSTREAM SENSE (PRESSURE REGISTRATION)											
		Internal Sense						Dual Sense (Combined Internal and External)					
		Body Outlet Size						Body Outlet Size					
		DN 25 / NPS 1		DN 32 / NPS 1-1/4		DN 40 / NPS 1-1/2		DN 25 / NPS 1		DN 32 / NPS 1-1/4		DN 40 / NPS 1-1/2	
bar	**psig**	**Sm^3/h**	**SCFH**	**Sm^3/h**	**SCFH**	**Sm^3/h**	**SCFH**	**Sm^3/h**	**SCFH**	**Sm^3/h**	**SCFH**	**Sm^3/h**	**SCFH**
2.0	29	148	5226	164	5791	152	5367	152	5367	165	5826	153	5403
3.0	44	257	9075	270	9534	222	7839	235	8298	253	8934	225	7945
4.0	58	375	13,243	360	12,713	319	11,265	285	10,064	340	12,006	270	9534
5.0	73	665	23,484	460	16,244	405	14,302	408	14,408	415	14,655	395	13,949
8.0	116	857	30,264	770	27,192	705	24,896	702	24,790	615	21,718	623	22,001
10	145	857	30,264	850	30,017	900	31,783	880	31,076	615	21,718	725	25,603
12	174	857	30,264	895	31,606	900	31,783	880	31,076	805	28,428	740	26,132
16	232	857	30,264	895	31,606	755	26,662	880	31,076	805	28,428	815	28,781
- Gray areas indicate limited capacities due to boost effects.													

Table 28. *CSB400 Series Internal and Dual Sense (Pressure Registration) Flow Capacities for 1.00 bar / 14.5 psig Setpoint, AC 10 Accuracy*

	ACCURACY AC 10%				
SETPOINT	**Droop**	**Boost**	**SET RANGE**	**PART NUMBER**	**COLOR**
1.00 bar	-100 mbar	100 mbar	0.50 to 1.00 bar	GE30203X012	Light Blue
14.5 psig	-1.5 psig	1.5 psig	7.3 to 14.5 psig		

INLET PRESSURE		METHOD OF DOWNSTREAM SENSE (PRESSURE REGISTRATION)											
		Internal Sense						Dual Sense (Combined Internal and External)					
		Body Outlet Size						Body Outlet Size					
		DN 25 / NPS 1		DN 32 / NPS 1-1/4		DN 40 / NPS 1-1/2		DN 25 / NPS 1		DN 32 / NPS 1-1/4		DN 40 / NPS 1-1/2	
bar	**psig**	**Sm^3/h**	**SCFH**	**Sm^3/h**	**SCFH**	**Sm^3/h**	**SCFH**	**Sm^3/h**	**SCFH**	**Sm^3/h**	**SCFH**	**Sm^3/h**	**SCFH**
2.0	29	281	9923	305	10,770	280	9888	267	9429	296	10,453	270	9534
3.0	44	424	14,973	470	16,597	440	15,538	405	14,302	435	15,361	422	14,902
4.0	58	620	21,895	635	22,424	553	19,529	520	18,363	580	20,482	555	19,599
5.0	73	723	25,532	815	28,781	730	25,779	680	24,013	710	25,073	677	23,908
8.0	116	880	31,076	925	32,666	965	34,078	890	31,430	930	32,842	1025	36,197
10	145	880	31,076	925	32,666	965	34,078	890	31,430	930	32,842	1025	36,197
12	174	880	31,076	925	32,666	965	34,078	890	31,430	930	32,842	1025	36,197
16	232	880	31,076	925	32,666	965	34,078	890	31,430	930	32,842	1025	36,197

Table 29. *CSB400 Series Internal and Dual Sense (Pressure Registration) Flow Capacities for 2.0 bar / 29 psig Setpoint, AC 5 Accuracy*

	ACCURACY AC 5%				
SETPOINT	**Droop**	**Boost**	**SET RANGE**	**PART NUMBER**	**COLOR**
2.0 bar	-100 mbar	100 mbar	1.00 to 3.0 bar	GE30204X012	Light Green
29 psig	-1.5 psig	1.5 psig	14.5 to 43.5 psig		

INLET PRESSURE		METHOD OF DOWNSTREAM SENSE (PRESSURE REGISTRATION)											
		Internal Sense						Dual Sense (Combined Internal and External)					
		Body Outlet Size						Body Outlet Size					
		DN 25 / NPS 1		DN 32 / NPS 1-1/4		DN 40 / NPS 1-1/2		DN 25 / NPS 1		DN 32 / NPS 1-1/4		DN 40 / NPS 1-1/2	
bar	**psig**	**Sm^3/h**	**SCFH**	**Sm^3/h**	**SCFH**	**Sm^3/h**	**SCFH**	**Sm^3/h**	**SCFH**	**Sm^3/h**	**SCFH**	**Sm^3/h**	**SCFH**
3.0	44	170	6003	170	6003	165	5826	165	5826	180	6356	160	5650
4.0	58	250	8828	250	8828	240	8475	225	7945	245	8652	245	8652
5.0	73	300	10,594	305	10,770	315	11,124	295	10,417	320	11,300	305	10,770
8.0	116	620	21,895	500	17,657	500	17,657	450	15,891	500	17,657	500	17,657
10	145	900	31,783	580	20,482	600	21,188	630	22,248	550	19,423	600	21,188
12	174	900	31,783	600	21,188	640	22,601	715	25,249	550	19,423	700	24,720
16	232	900	31,783	625	22,071	900	31,783	850	30,017	640	22,601	750	26,486

Table 30. *CSB400 Series Internal and Dual Sense (Pressure Registration) Flow Capacities for 2.0 bar / 29 psig Setpoint, AC 10 Accuracy*

	ACCURACY AC 10%				
SETPOINT	**Droop**	**Boost**	**SET RANGE**	**PART NUMBER**	**COLOR**
2.0 bar	-200 mbar	200 mbar	1.00 to 3.0 bar	GE30204X012	Light Green
29 psig	-2.9 psig	2.9 psig	14.5 to 43.5 psig		

INLET PRESSURE		METHOD OF DOWNSTREAM SENSE (PRESSURE REGISTRATION)											
		Internal Sense						Dual Sense (Combined Internal and External)					
		Body Outlet Size						Body Outlet Size					
		DN 25 / NPS 1		DN 32 / NPS 1-1/4		DN 40 / NPS 1-1/2		DN 25 / NPS 1		DN 32 / NPS 1-1/4		DN 40 / NPS 1-1/2	
bar	**psig**	**Sm^3/h**	**SCFH**	**Sm^3/h**	**SCFH**	**Sm^3/h**	**SCFH**	**Sm^3/h**	**SCFH**	**Sm^3/h**	**SCFH**	**Sm^3/h**	**SCFH**
3.0	44	320	11,300	340	12,006	300	10,594	315	11,124	335	11,830	305	10,770
4.0	58	460	16,244	480	16,951	445	15,715	430	15,185	475	16,774	455	16,068
5.0	73	575	20,305	600	21,188	600	21,188	550	19,423	610	21,541	585	20,659
8.0	116	945	33,372	950	33,548	925	32,666	865	30,547	945	33,372	925	32,666
10	145	945	33,372	950	33,548	925	32,666	925	32,666	945	33,372	925	32,666
12	174	945	33,372	950	33,548	925	32,666	925	32,666	945	33,372	925	32,666
16	232	945	33,372	950	33,548	925	32,666	925	32,666	945	33,372	925	32,666

Table 31. *CSB400 Series Internal and Dual Sense (Pressure Registration) Flow Capacities for 3.0 bar / 44 psig Setpoint, AC 5 Accuracy*

	ACCURACY AC 5%				
SETPOINT	**Droop**	**Boost**	**SET RANGE**	**PART NUMBER**	**COLOR**
3.0 bar	-150 mbar	150 mbar	1.00 to 3.0 bar	GE30204X012	Light Green
43.5 psig	-2.2 psig	2.2 psig	14.5 to 43.5 psig		

INLET PRESSURE		METHOD OF DOWNSTREAM SENSE (PRESSURE REGISTRATION)											
		Internal Sense						Dual Sense (Combined Internal and External)					
		Body Outlet Size						Body Outlet Size					
		DN 25 / NPS 1		DN 32 / NPS 1-1/4		DN 40 / NPS 1-1/2		DN 25 / NPS 1		DN 32 / NPS 1-1/4		DN 40 / NPS 1-1/2	
bar	**psig**	**Sm^3/h**	**SCFH**	**Sm^3/h**	**SCFH**	**Sm^3/h**	**SCFH**	**Sm^3/h**	**SCFH**	**Sm^3/h**	**SCFH**	**Sm^3/h**	**SCFH**
4.0	58	115	4061	180	6356	110	3884	90	3178	185	6533	205	7239
5.0	73	115	4061	180	6356	110	3884	90	3178	185	6533	275	9711
8.0	116	115	4061	180	6356	110	3884	95	3354	185	6533	575	20,305
10	145	245	8652	700	24,720	235	8298	255	9005	755	26,662	850	30,017
12	174	820	28,958	825	29,134	920	32,489	835	29,487	850	30,017	925	32,666
16	232	820	28,958	825	29,134	920	32,489	835	29,487	850	30,017	925	32,666

Table 32. *CSB400 Series Internal and Dual Sense (Pressure Registration) Flow Capacities for 3.0 bar / 44 psig Setpoint, AC 10 Accuracy*

	ACCURACY AC 10%				
SETPOINT	**Droop**	**Boost**	**SET RANGE**	**PART NUMBER**	**COLOR**
3.0 bar	-300 mbar	300 mbar	1.00 to 3.0 bar	GE30204X012	Light Green
43.5 psig	-4.4 psig	4.4 psig	14.5 to 43.5 psig		

INLET PRESSURE		METHOD OF DOWNSTREAM SENSE (PRESSURE REGISTRATION)											
		Internal Sense						Dual Sense (Combined Internal and External)					
		Body Outlet Size						Body Outlet Size					
		DN 25 / NPS 1		DN 32 / NPS 1-1/4		DN 40 / NPS 1-1/2		DN 25 / NPS 1		DN 32 / NPS 1-1/4		DN 40 / NPS 1-1/2	
bar	**psig**	**Sm^3/h**	**SCFH**	**Sm^3/h**	**SCFH**	**Sm^3/h**	**SCFH**	**Sm^3/h**	**SCFH**	**Sm^3/h**	**SCFH**	**Sm^3/h**	**SCFH**
4.0	58	125	4414	500	17,657	115	4061	105	3708	500	17,657	445	15,715
5.0	73	125	4414	680	24,013	115	4061	105	3708	690	24,367	580	20,482
8.0	116	125	4414	680	24,013	115	4061	105	3708	955	33,725	1025	36,197
10	145	270	9534	940	33,195	270	9534	275	9711	955	33,725	1025	36,197
12	174	920	32,489	940	33,195	940	33,195	925	32,666	955	33,725	1025	36,197
16	232	920	32,489	940	33,195	940	33,195	925	32,666	955	33,725	1025	36,197

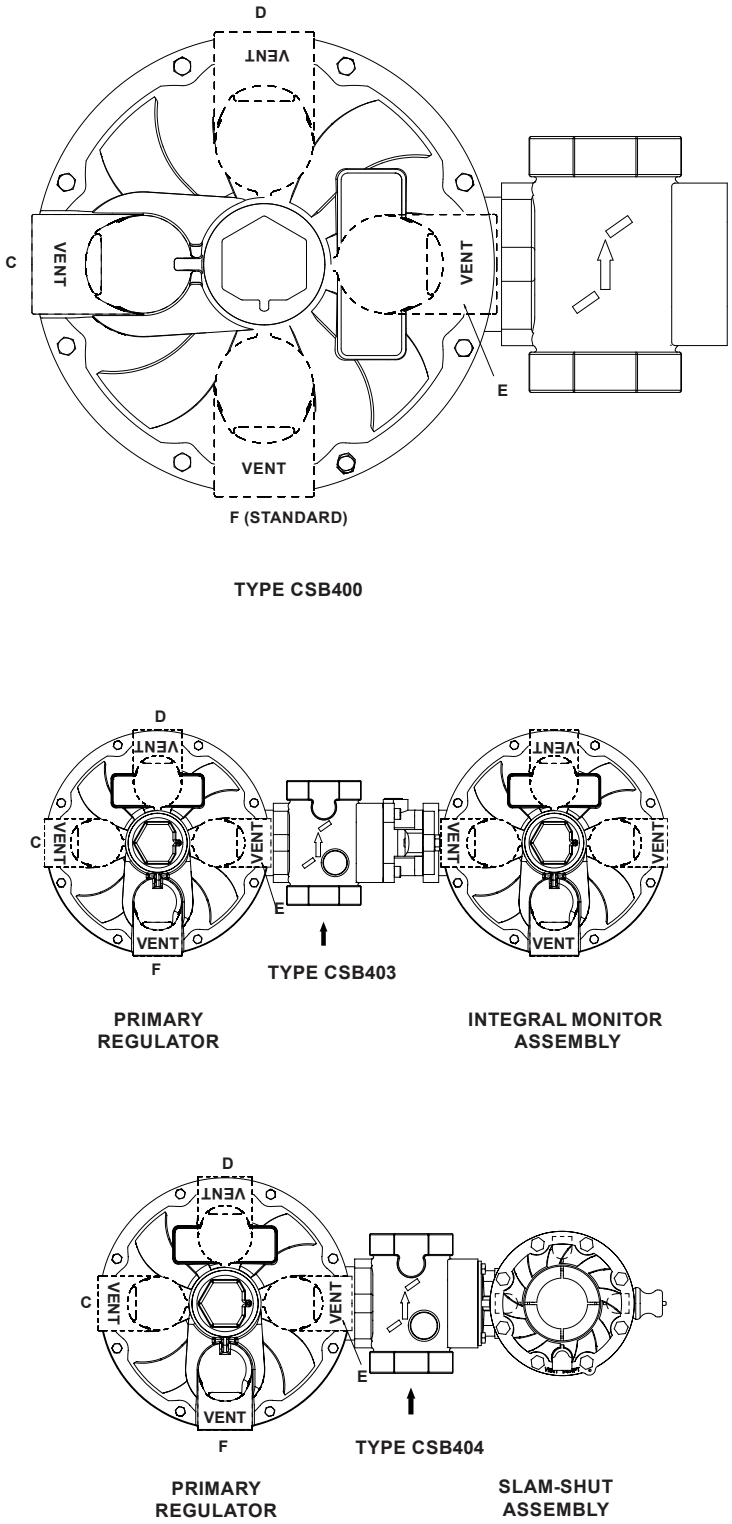

GE27692

Figure 8. *Types CSB400, CSB403 and CSB404 Spring Case Vent and Body Orientation*

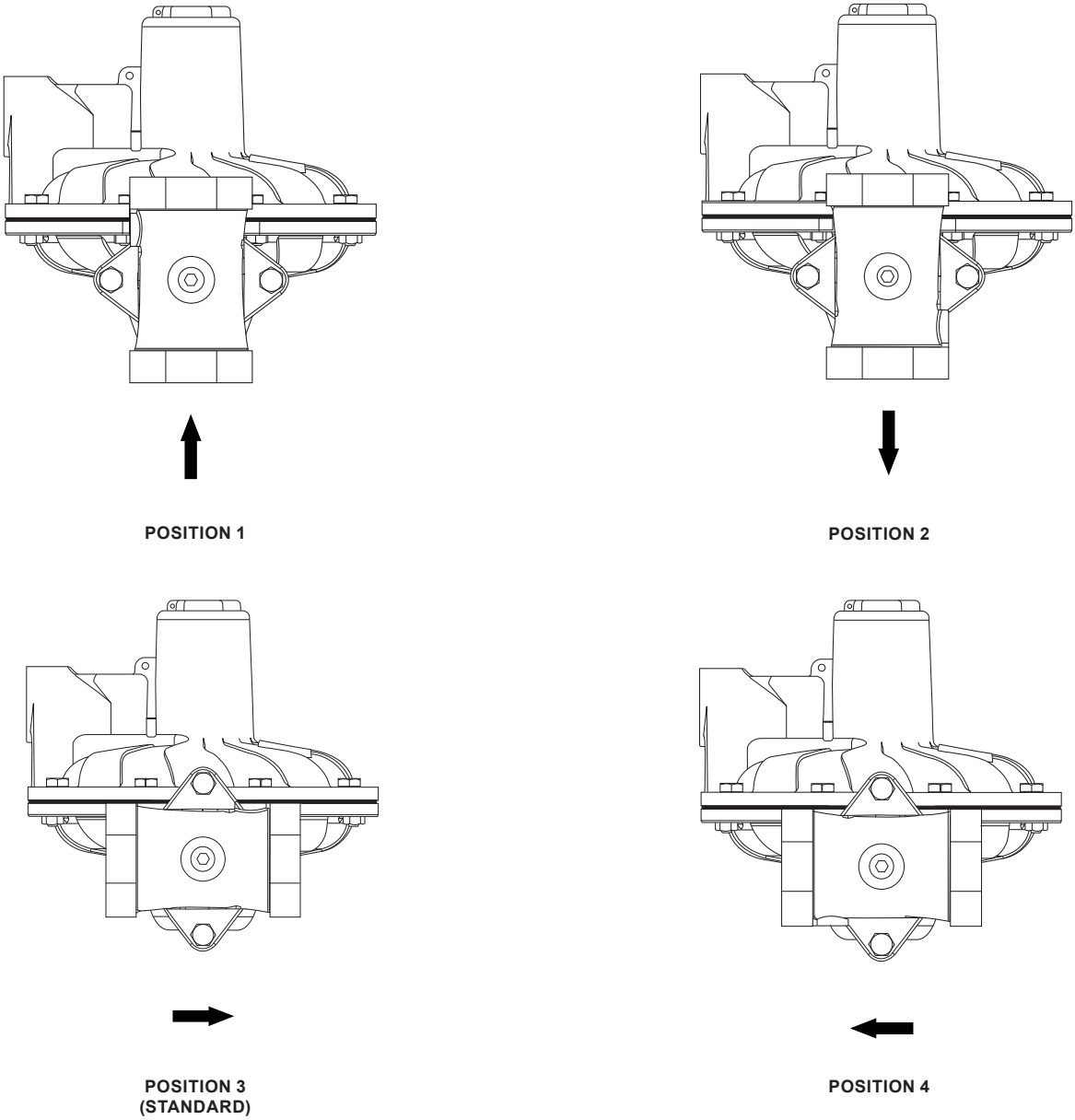

GE27692

CHOOSE VENT AND BODY POSITION FOR THE TYPES CSB403 AND CSB404, IN THE SAME WAY AS THE BASE CSB400 SERIES REGULATOR. THE VENT OF THE INTEGRAL MONITOR OR SLAM-SHUT WILL BE POINTED IN THE SAME DIRECTION AS THE PRIMARY REGULATOR. BODY POSITION WILL ALSO BE BASED ON MAIN REGULATOR AS THE SPRING BARREL OF THE INTEGRAL MONITOR OR SLAM-SHUT WILL POINT THE SAME DIRECTION AS THE PRIMARY REGULATOR.

Figure 8. *Types CSB400, CSB403 and CSB404 Spring Case Vent and Body Orientation (continued)*

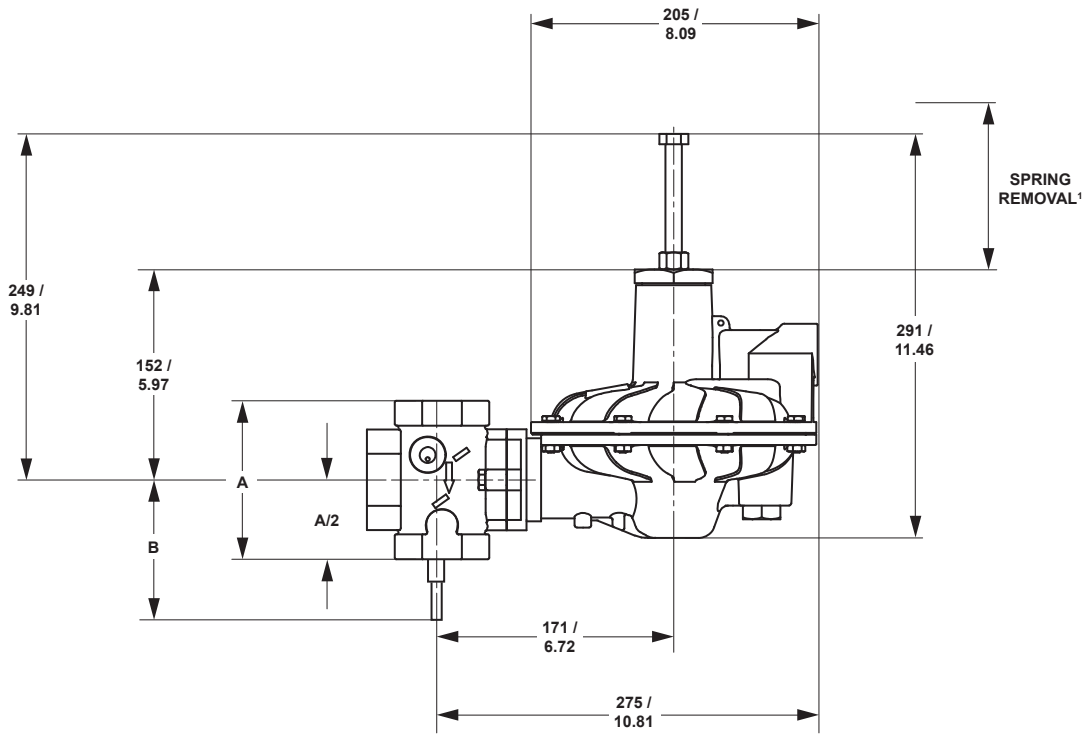

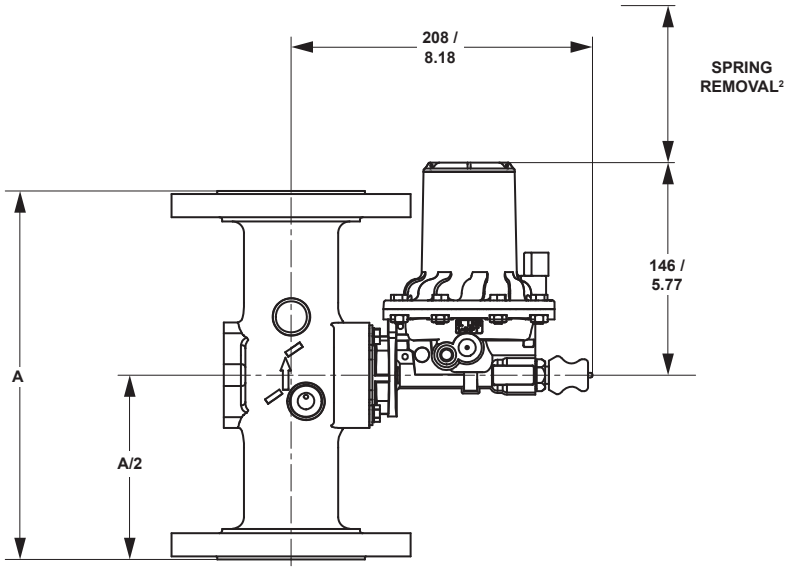

mm / IN.

SLAM-SHUT MODULE

GE34270

1. MAXIMUM SPRING REMOVAL CLEARANCE FOR BOTH THE PRIMARY REGULATOR AND INTEGRAL MONITOR IS 158 mm / 6.2 in.
2. MAXIMUM SPRING REMOVAL CLEARANCE FOR THE SLAM-SHUT IS 80 mm / 3.1 in.

Figure 9. *CSB400 Series Dimensions*

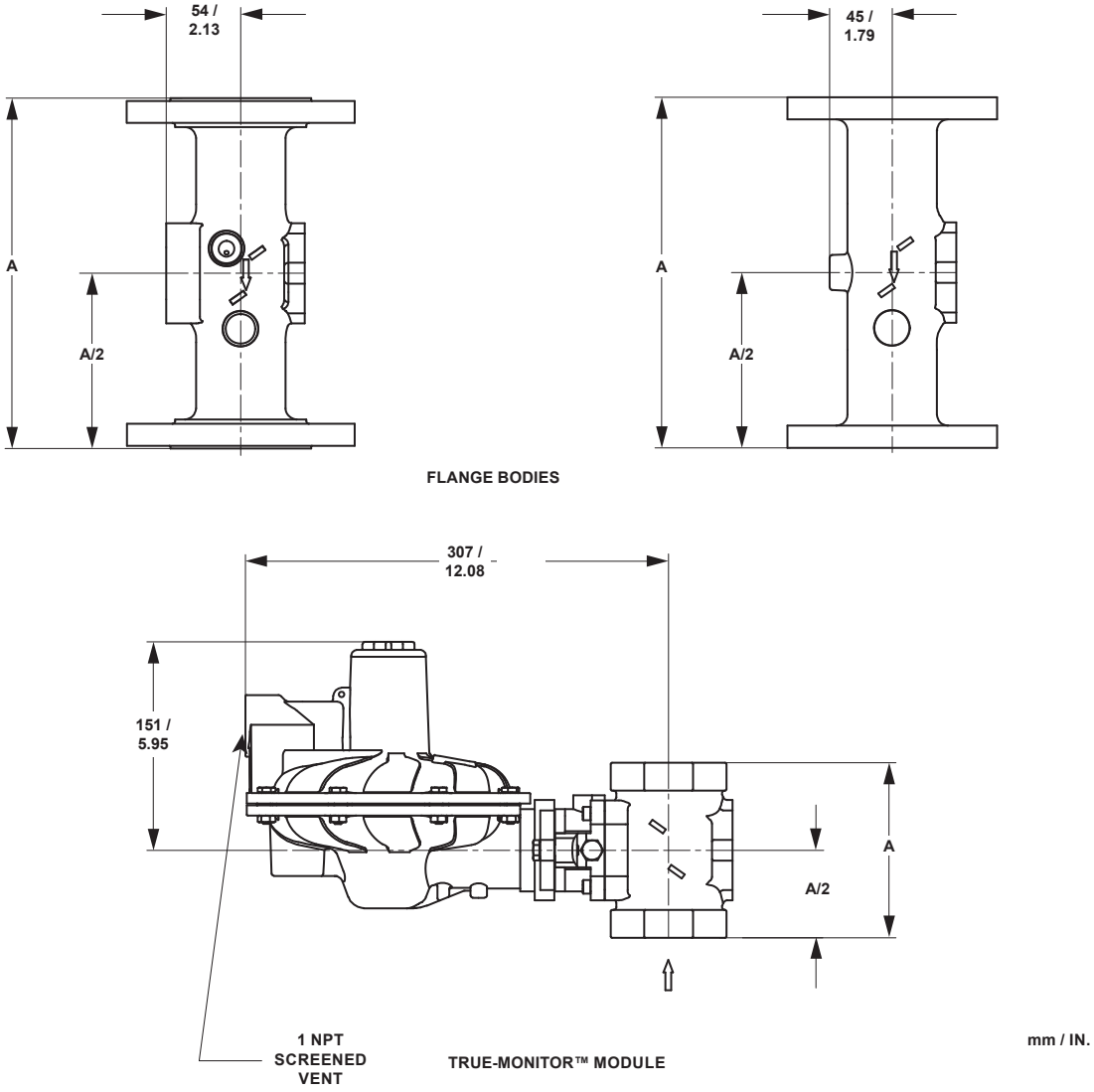

GE34270

1. MAXIMUM SPRING REMOVAL CLEARANCE FOR BOTH THE PRIMARY REGULATOR AND INTEGRAL MONITOR IS 158 mm / 6.2 in.
2. MAXIMUM SPRING REMOVAL CLEARANCE FOR THE SLAM-SHUT IS 80 mm / 3.1 in.

Figure 9. *CSB400 Series Dimensions (continued)*

Table 33. *CSB400 Series Dimensions*

BODY SIZE		BODY END CONNECTION STYLE	FACE-TO-FACE DIAMETER (A)		PITOT TUBE (B)	
DN	NPS		mm	In.	mm	In.
25	1	NPT or Rp	100	4	97	3.8
32	1-1/4		114	4.5		
40	1-1/2		114	4.5		
50	2		127	5		
50	2	CL150 FF or PN 10/16	254	10		
25 x 32	1 x 1-1/4	Rp	114	4.5		
25 x 57	1 x 2-1/4	Rp x GAZ	105	4.1	20	0.8
40	1-1/2	PN 16 Slip-On	184	7.2	97	3.8

Ordering Guide

Type (See Table 1 for Construction details)
(Select One)

Stand-alone Regulator

- ☐ CSB400IN
- ☐ CSB400IT
- ☐ CSB400DT
- ☐ CSB400DN
- ☐ CSB400ET
- ☐ CSB400EN
- ☐ CSB410EN
- ☐ CSB420IN
- ☐ CSB420IT
- ☐ CSB420DN
- ☐ CSB420DT
- ☐ CSB420EN
- ☐ CSB420ET
- ☐ CSB430EN
- ☐ CSB450IN
- ☐ CSB450DN
- ☐ CSB450EN

With Integral True-Monitor™ Module

- ☐ CSB403IN
- ☐ CSB403IT
- ☐ CSB403DT
- ☐ CSB403DN
- ☐ CSB403ET
- ☐ CSB403EN
- ☐ CSB423IN
- ☐ CSB423IT
- ☐ CSB423DN
- ☐ CSB423DT
- ☐ CSB423EN
- ☐ CSB423ET
- ☐ CSB453EN
- ☐ CSB453ET

With Type VSX4 Slam-Shut Module

- ☐ CSB404IN
- ☐ CSB404IT
- ☐ CSB404DT
- ☐ CSB404DN
- ☐ CSB404ET
- ☐ CSB404EN
- ☐ CSB414EN
- ☐ CSB424IN
- ☐ CSB424IT
- ☐ CSB424DN
- ☐ CSB424DT
- ☐ CSB424EN
- ☐ CSB424ET
- ☐ CSB434EN
- ☐ CSB454IN
- ☐ CSB454DN
- ☐ CSB454EN

Body Size and End Connection Style (Select One)

Ductile Cast Iron (Types CSB400, CSB420 and CSB450)

- ☐ 1 NPT***
- ☐ 1-1/4 NPT***
- ☐ 1-1/2 NPT***
- ☐ 2 NPT***
- ☐ Rp 1***
- ☐ Rp 1 x 1-1/4***
- ☐ Rp 1-1/4***
- ☐ Rp 1-1/2***
- ☐ Rp 2***
- ☐ DN 50 / NPS 2, CL150 FF***
- ☐ DN 50 / NPS 2, PN 10/16***
- ☐ Rp 1 x 2-1/4 GAZ***
- ☐ DN 40 / NPS 1-1/2, PN 16 slip-on flanged body

Body Size and End Connection Style
(Select One)(continued)

Steel (Types CSB400, CSB420 and CSB450)

- ☐ 1 NPT***
- ☐ 1-1/4 NPT***
- ☐ 1-1/2, NPT***
- ☐ Rp 1***
- ☐ Rp 1-1/4***
- ☐ Rp 1-1/2***

Outlet Pressure Range (Select One)

- ☐ 17 to 24 mbar / 6.8 to 9.6 in. w.c., Pink***
- ☐ 24 to 35 mbar / 9.6 to 14 in. w.c., Orange Stripe***
- ☐ 35 to 60 mbar / 14 to 24 in. w.c., Dark Green***
- ☐ 54 to 100 mbar / 0.78 to 1.5 psig, Tan***
- ☐ 100 to 160 mbar / 1.45 to 2.3 psig, Purple Stripe***
- ☐ 138 to 300 mbar / 2.0 to 4.4 psig, Dark Blue***
- ☐ 276 to 517 mbar / 4 to 7.5 psig, Red***
- ☐ 500 mbar to 1 bar / 7.3 to 14.5 psig, Light Blue***
- ☐ 1 to 3 bar / 14.5 to 43.5 psig, Light Green***

Body Orientation (For the Types CSB403 and CSB404, choose the body orientation of the primary regulator only. The Integral Monitor and Slam-Shut spring barrel will be oriented in the same direction as the Primary Regulator spring barrel) (Select One)

- ☐ Position 1***
- ☐ Position 2***
- ☐ Position 3 **(standard)***
- ☐ Position 4***

Vent Orientation (For the Types CSB403 and CSB404, choose the vent orientation of the primary regulator only. The Integral Monitor and Slam-Shut vent will be oriented to point in the same direction as the Primary Regulator) (Select One)

- ☐ Position C***
- ☐ Position D***
- ☐ Position E***
- ☐ Position F **(standard)***

Slam-Shut Trip Pressure Setting (Select One if applicable)

- ☐ Overpressure (OPSO) trip only (supply high pressure trip pressure) Indicate trip pressure _____
- ☐ Over and Underpressure (OPSO/UPSO) trip (supply high and low pressure trip pressure) Indicate trip points Over _____

Slam-Shut Options (Select One)

- ☐ Reed Switch
- ☐ Retrofit Switch Option (Add magnet without Reed Switch

Ordering Guide (continued)

Specification Worksheet

Application:

Specific Use _____

Line Size _____

Gas Type and Specific Gravity _____

Gas Temperature _____

Does the Application Require Overpressure Protection?

☐ Yes ☐ No If yes, which is preferred:

☐ Relief Valve ☐ Monitor Regulator ☐ Shutoff Device

Is overpressure protection equipment selection assistance desired? _____

Pressure:

Maximum Inlet Pressure (P_{1max}) _____

Minimum Inlet Pressure (P_{1min}) _____

Downstream Pressure Setting(s) (P_2) _____

Maximum Flow (Q_{max}) _____

Performance Required:

Accuracy Requirements? _____

Need for Extremely Fast Response? _____

Other Requirements: _____

Regulators Quick Order Guide	
* * *	Readily Available for Shipment
* *	Allow Additional Time for Shipment
*	Special Order, Constructed from Non-Stocked Parts. Consult Your local Sales Office for Availability.
Availability of the product being ordered is determined by the component with the longest shipping time for the requested construction.	

Webadmin.Regulators@emerson.com
Fisher.com
Facebook.com/EmersonAutomationSolutions
LinkedIn.com/emerson-final-control
X.com/EMR_Automation

Emerson

Americas
McKinney, Texas 75069 USA
T +1 800 558 5853
+1 972 548 3574

Asia Pacific
Singapore 128461, Singapore
T +65 6777 8211

Europe
Bologna 40013, Italy
T +39 051 419 0611

Middle East and Africa
Dubai, United Arab Emirates
T +971 4 811 8100

D103137X012 © 2009, 2026 Emerson Process Management Regulator Technologies, Inc. All rights reserved. 03/26.
Fisher™ is a mark owned by a subsidiary of Emerson Electric Co. The Emerson logo is a trademark and service mark of Emerson Electric Co. All other marks are property of their respective owners.

Neither Emerson nor any of its affiliated entities assume responsibility for the selection, use or maintenance of any product. Responsibility for proper selection, use, and maintenance of any product remains solely with the purchaser and end user.

The contents of this publication are presented for informational purposes only and while every effort has been made to ensure their accuracy, they are not to be construed as warranties or guarantees, express or implied, regarding the products or services described herein or their use or applicability. All sales are governed by our terms and conditions, which are available upon request. We reserve the right to modify or improve the designs or specifications of such products at any time without notice.

The distinctive swirl pattern cast into every actuator casing uniquely identifies the regulator as part of the Fisher™ brand Commercial Service Regulator family and assures you of the highest-quality engineering, performance, and support traditionally associated with Fisher™ and Tartarini™ regulators. Visit www.fishercommercialservice.com to access interactive applications.

EMERSON™