May 2025

Type MR108 Direct-Operated Backpressure Regulators

TYPE MR108 WITH
LOW-PRESSURE ACTUATOR

TYPE MR108 WITH
HIGH-PRESSURE ACTUATOR

Figure 1. *Type MR108 Direct-Operated Backpressure Regulators*

Contents

Introduction 3
Specifications 2
Features 3
Principle of Operation 3
Overpressure Condition 6
Installation 6
Applications..... 6
Universal NACE Compliance 7
Ordering Information 19
Ordering Guide 19

Features

- **Large Flow**
- **Variety of Cage Options to Meet Application Requirements**
- **Fast Response**
- **Steel and Stainless Steel Constructions Meet API 614 Requirements**
- **Available Constructions to Meet NACE MR0175-2003 and MR0103 Requirements for Sour Gas Service Capability**
- **Multiple Trim Materials Available**
- **ANSI/FCI 70-3-2004 Class VI Shutoff**
- **Multiple End Connection Options**
- **$P_1 = P_2$ on High-Pressure Actuator**
- **Suitable for High-Temperature Applications up to 250°F / 121°C**
- **Drain Valve**
- **Bleed valve (for High-Pressure Actuator only)**
- **Arctic Temperature Constructions**
- **Hydrogen Ready**

FISHER™

EMERSON™

Specifications

The Specifications section on this page provides the ratings and other specifications for the Type MR108. The following information is stamped on the nameplate fastened on the regulator at the factory: type; body size; maximum inlet, outlet and differential pressure; maximum pressure above setpoint; maximum casing pressure; maximum temperature; spring range; cage type; and trim and diaphragm material.

Body Sizes and End Connection Styles
See Table 1

Shutoff Classification per ANSI/FCI 70-3-2004
Class VI (Soft Seat)

Maximum Inlet, Outlet and Emergency Casing Pressure[1]
See Table 5

Backpressure Control Ranges
5 to 300 psig / 0.34 to 20.7 bar; See Table 2

Construction Materials
See Table 3

Maximum Setpoint
Low-Pressure Actuator: 35 psig / 2.4 bar
High-Pressure Actuator:
Nitrile (NBR) and Ethylene Propylene (EPDM) Diaphragm: 300 psig / 20.7 bar
Fluorocarbon (FKM) Diaphragm: 150 psig / 10.3 bar

Maximum Differential Pressures
Low-Pressure Actuator: 70 psig / 4.8 bar
High-Pressure Actuator: 400 psig / 27.6 bar or maximum inlet pressure, whichever is lower

Maximum Pressure Over Setpoint to Avoid Internal Parts Damage[1]
Low-Pressure Actuator: 20 psig / 1.4 bar
High-Pressure Actuator: 120 psig / 8.3 bar

Flow and Sizing Coefficients
See Table 4

C_V Coefficients
See Tables 6 through 11

Capacities
See Tables 12 to 19

Temperature Capabilities[1][4]
Nitrile (NBR): -20 to 180°F / -29 to 82°C
Fluorocarbon (FKM): 20 to 250°F / -7 to 121°C[2]
EPDM: -20 to 225°F / -29 to 107°C[3]

Pressure Registration
External

Upstream Control Line Connection Size
1/2 NPT

Spring Case Vent
Type Y602-12

Pressure-Loaded Spring Case Vent Connection
1/2 NPT

Approximate Weights
For Type MR108 with Low-Pressure Actuator
NPS 1 / DN 25: 88 lbs / 40 kg
NPS 2 / DN 50: 118 lbs / 54 kg
NPS 3 / DN 80: 167 lbs / 76 kg
NPS 4 / DN 100: 176 lbs / 80 kg
For Type MR108 with High-Pressure Actuator
NPS 1 / DN 25: 78 lbs / 35 kg
NPS 2 / DN 50: 107 lbs / 49 kg
NPS 3 / DN 80: 156 lbs / 71 kg
NPS 4 / DN 100: 166 lbs / 75 kg

Options
- Pressure-Loaded Actuator
- Drain Valve
- NACE Construction
- Bleed Valve (For High-Pressure Actuator only)
- EPDM Elastomer Trim Parts

1. The pressure/temperature limits in this Bulletin or any applicable standard limitation should not be exceeded.
2. Fluorocarbon (FKM) is limited to 200°F / 93°C in hot water.
3. EPDM is limited to 20 to 225°F / -7 to 107°C when used with Low Pressure Actuator.
4. Special low temperature constructions for process temperatures between -76 to 185°F / -60 to 85°C are available by request. The low temperature construction passed Emerson laboratory testing for lockup and external leakage down to -76°F / -60°C.

Table 1. *Body Sizes and End Connection Styles*

BODY MATERIAL	END CONNECTION STYLE	
	NPS 1 and 2 / DN 25 and 50 Body Sizes	NPS 3 and 4 / DN 80 and 100 Body Sizes
Cast Iron	NPT, CL125 FF or CL250 RF	CL125 FF or CL250 RF
WCC Steel[1][2]	NPT, CL150 RF, CL300 RF, CL600 RF or PN 16/25/40 RF	CL150 RF, CL300 RF, CL600 RF or PN 16 RF
CF8M Stainless steel[1][2]	NPT, CL150 RF, CL300 RF, CL600 RF or PN 16/25/40 RF	CL150 RF, CL300 RF, CL600 RF or PN 16 RF
CF3M Stainless steel[1][2]	NPT, CL150 RF, CL300 RF, CL600 RF or PN 16/25/40 RF	CL150 RF, CL300 RF, CL600 RF or PN 16 RF

1. Optional NACE construction available.
2. Constructions meet API 614 requirements.

Introduction

The Type MR108 regulators are direct-operated, backpressure, high-capacity, multi-purpose regulators. They are designed to handle pressures up to 400 psig / 27.6 bar and temperatures up to 250°F / 121°C.

This product provides a fast, simple, reliable and economical backpressure control in multi-purpose applications suitable for different flow media including liquid, air and gas. Applications include lube oil systems and any application where speed of response is critical, minimum differential pressure is a concern or fluid is not free of impurities. Type MR108 backpressure regulators with low-pressure actuators can be set up to 35 psig / 2.4 bar and the high-pressure actuator version can be set to 150 psig / 10.3 bar for constructions with Fluorocarbon (FKM) diaphragm and 300 psig / 20.7 bar for constructions with Nitrile (NBR) diaphragm.

The units are available in 4 sizes, NPS 1 through 4 / DN 25 through 100 and are available in several end connection configurations to meet demands on application requirements.

Available with 3 different cage options: linear cage for accurate control at low flow conditions, high capacity linear cage for medium flow application with high-turndown requirements and quick-opening cage for high flow applications.

The Type MR108 with Steel or Stainless steel body construction has been designed to meet API 614 as required by lube oil manufacturers.

Features

Large Flow—Able to pass large flow rates with a minimum pressure buildup.

Stability—The Type MR108 regulator's cage-guided metal plug design provides superior control stability of delivery pressure.

Fast Response—Direct-operated for fast response to meet the most demanding pressure and flow requirements.

Easy Drain—Feature allows you to drain the system without expensive spool pieces saving you time and space.

Easy Bleed—Feature allows you to purge the air trapped underneath the diaphragm, improving speed of response and stability. Recommended when the regulator is installed in the upright position.

Steel and Stainless Steel Constructions Meet API 614 Requirements—Steel and Stainless steel body constructions comply with the recommendations of API Standard 614.

Available Constructions to Meet NACE MR0175-2003 and NACE MR0103 Requirements for Sour Gas Service Capability—Optional materials are available for applications handling sour gases. These constructions comply with the recommendations of NACE International Standards MR0175 and MR0103.

Multiple Trim Materials Available—416, 316 and 316L Stainless steel options are available to meet wider application requirements including demands from lube oil and cooling water applications.

Arctic Temperature Constructions—For process temperatures as low as -76°F / -60°C.

ANSI/FCI 70-3-2004 Class VI Shutoff—Soft-seat valve plug seals for tight shutoff.

Multiple End Connection Options—Type MR108 is available in several end connection configurations to meet demands on application requirements.

$P_1 = P_2$ on High-Pressure Actuator—Inlet pressure rating equals outlet pressure rating on high-pressure actuator constructions up to 400 psig / 27.6 bar.

Hydrogen Ready—Products have been evaluated for material compatibility, potential leakage and permeation and susceptibility to embitterment for Hydrogen applications. Based on an extensive evaluation and testing program, Type MR108 configurations are available for use in Hydrogen applications.

Principle of Operation

Refer to Figure 2. The Type MR108 is a multi-purpose backpressure regulator. Upstream pressure is registered externally through a 1/2 NPT control line connection located at the low-pressure actuator bonnet or high-pressure actuator lower casing. When inlet pressure rises above the set pressure, the pressure under the actuator diaphragm increases and opens the regulator. This pressure overcomes the regulator setting (which is set by the regulator control spring). Through the action of the actuator stem, the valve plug is pulled upward moving away from the seat ring and allowing fluid to escape through the cage into the downstream system. When inlet pressure drops back to set pressure, pressure under the actuator diaphragm decreases. The control spring and the valve spring forces push the actuator stem downward, the valve plug moves closer to the seat ring and the flow decreases downstream as the regulator closes in response to the decreased pressure underneath the diaphragm.

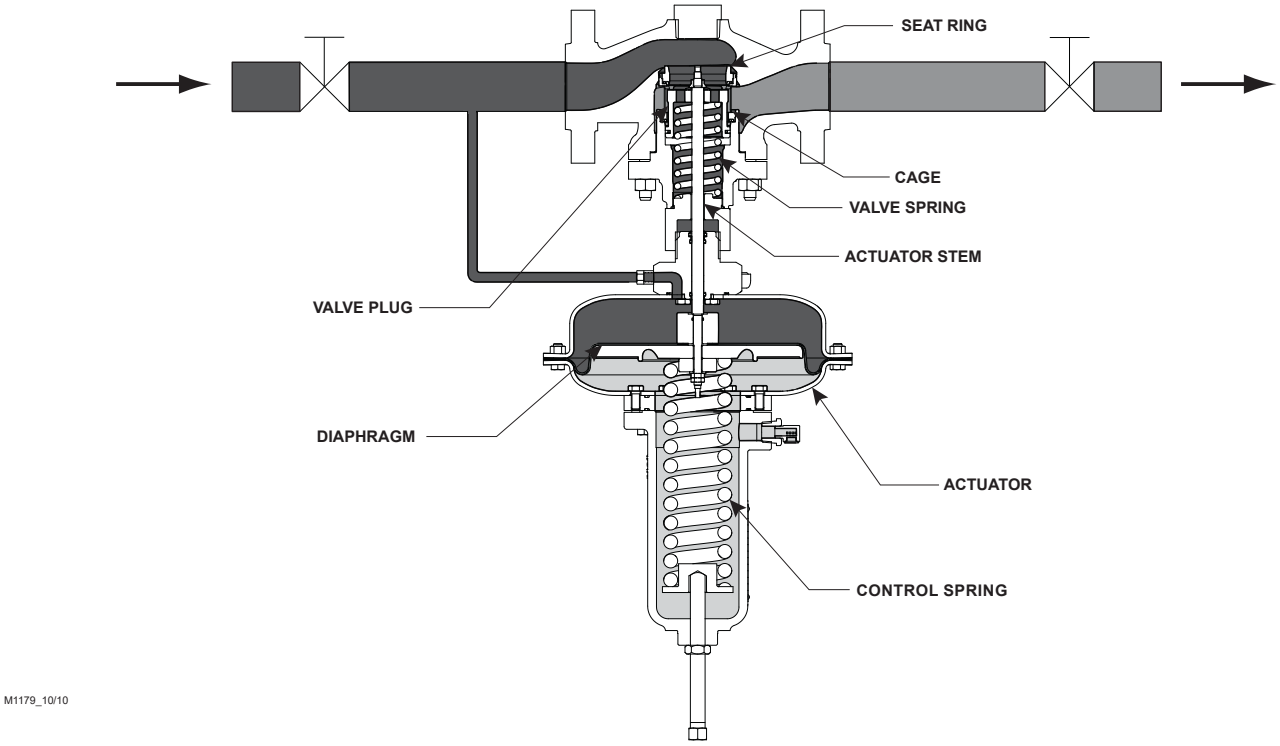

TYPE MR108 WITH LOW-PRESSURE ACTUATOR

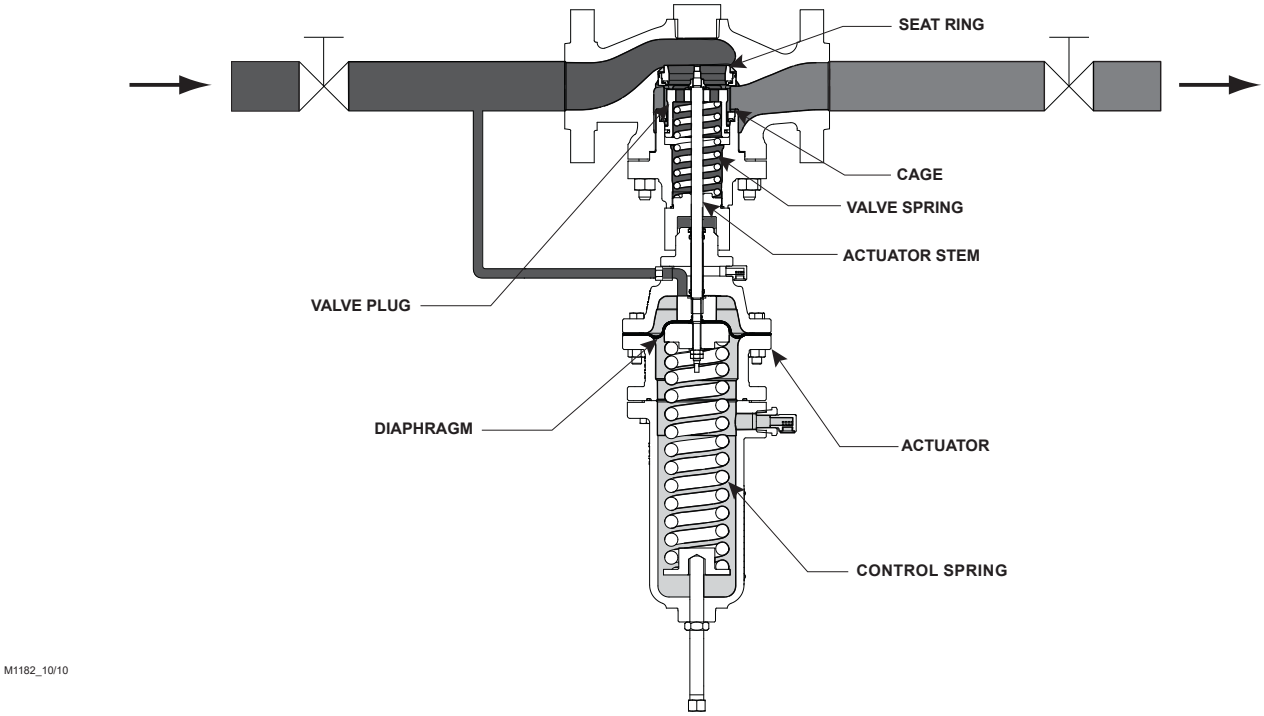

TYPE MR108 WITH HIGH-PRESSURE ACTUATOR

INLET PRESSURE
OUTLET PRESSURE
ATMOSPHERIC PRESSURE

Figure 2. *Type MR108 Backpressure Regulator Operational Schematic*

Table 2. *Backpressure Control Ranges*

ACTUATORTYPE	SPRING RANGE		SPRING PART NUMBER	SPRING COLOR CODE	SPRING WIRE DIAMETER		SPRING FREE LENGTH		MAXIMUM PRESSURE OVER SETPOINT TO AVOID INTERNAL PARTS DAMAGE	
	psig	bar			In.	mm	In.	mm	psig	bar
Low Pressure	5 to 14	0.34 to 0.97	GE42909X012	White	0.44	11.2	9.70	246	20	1.4
	8 to 24	0.55 to 1.7	GE42910X012	Silver	0.50	12.7				
	12 to 30	0.83 to 2.1	GE42911X012	Orange	0.56	14.2				
	15 to 35	1.0 to 2.4	GE43002X012	Red	0.63	16.0				
High Pressure	25 to 40	1.7 to 2.8	GE42906X012	Blue	0.33	8.38			120	8.3
	35 to 70	2.4 to 4.8	GE42907X012	Green	0.38	9.65				
	55 to 120	3.8 to 8.3	GE42909X012	White	0.44	11.2				
	90 to 200(1)	6.2 to 13.8(2)	GE42910X012	Silver	0.50	12.7				
	175 to 300(1)	12.1 to 20.7(2)	GE43002X012	Red	0.63	16.0				

1. Maximum setpoint is limited to 150 psig / 10.3 bar for constructions with Fluorocarbon (FKM) diaphragm.
2. Not applicable for constructions with Fluorocarbon (FKM) diaphragm.

Table 3. *Construction Materials*

PART	STANDARD	OPTIONAL
Body	WCC Steel(1)	Cast Iron, CF8M, CF3M Stainless steel
Body Flange	WCC Steel(1)	CF8M, CF3M Stainless steel
Actuator Casing - Low Pressure	AISI 1010 Steel(1)	316/316L Stainless steel
Actuator Casing - High Pressure	WCC Steel(1)	CF3M/CF8M Stainless steel
Internal Stiffener Plate	AISI 1010 Steel(1)	316/316L Stainless steel
Spring Case	WCC Steel	CF3M/CF8M Stainless steel
Spring Case Spacer	Zinc-plated Steel	Stainless steel
Cage	CF3M/CF8M (Quick Opening), CF8M (Linear) Stainless steel	
Valve Plug and Seat Ring	416 Stainless steel	316, 316L, S20910 (Nitronic 50) Stainless steel (NPS 1 / DN 25 only)
Closing Spring	Inconel® X750	
Stem	S17400 H1075 Stainless steel	S20910 (Nitronic 50) Stainless steel
Lower Diaphragm Support	S17400 H1075 Stainless steel	
Diaphragm and Seals	Nitrile (NBR)	Fluorocarbon (FKM), EPDM
Upper Diaphragm Plate	Cast Iron	
Control/Set Spring	Steel Alloy(1)	
Spring Seats	Zinc-plated Steel	
Bolting	SA194 Grade B7/NCF (Body to Bonnet) SAE Grade 5/NCF (Actuator)	Stainless steel
Adjusting Screw	Zinc-plated Steel	Stainless steel

1. Powder coated.

Table 4. *Wide Open Flow and Sizing Coefficients*

BODY SIZE		WIDE OPEN COEFFICIENT		IEC SIZING COEFFICIENT				
		Line Size Equals Body Size						
NPS	DN	C_g	C_v	C_1	K_m	F_L	X_T	F_d
Linear Cage								
1	25	463	13.7	34	0.81	0.9	0.73	0.36
2	50	761	22.5	33.8	0.75	0.87	0.72	0.24
3	80	997	30.5	32.7	0.78	0.88	0.68	0.22
4	100	934	27.5	34	0.77	0.88	0.75	0.18
High-Capacity Linear Cage(1)								
2	50		43.6		0.8	0.89		
3	80		69.3		0.73	0.85		
4	100		71.5		0.71	0.84		
Quick Opening Cage								
1	25	597	17.5	34.1	0.81	0.9	0.73	0.43
2	50	1740	48.2	36.1	0.81	0.9	0.82	0.34
3	80	3540	103.1	34.4	0.76	0.87	0.75	0.32
4	100	4300	135.9	31.6	0.72	0.85	0.65	0.3

– Shaded areas represents that for High-Capacity Linear Cage, only C_v, K_m, F_L are available.
1. Recommend for use in liquid applications only.

Inconel® is a mark owned by Special Metals Corporation.

Table 5. *Maximum Inlet, Outlet and Emergency Casing Pressures*[1]

BODY MATERIAL	END CONNECTION	MAXIMUM INLET PRESSURE				MAXIMUM OUTLET PRESSURE				MAXIMUM EMERGENCY CASING PRESSURE			
		Low-Pressure Actuator		High-Pressure Actuator[2]		Low-Pressure Actuator		High-Pressure Actuator[2]		Low-Pressure Actuator		High-Pressure Actuator[2]	
		psig	bar	psig	bar	psig	bar	psig	bar	psig	bar	psig	bar
Cast Iron	NPT	70	4.8	340	23.4	70	4.8	340	23.4	70	4.8	340	23.4
	CL125 FF			175	12.1			175	12.1			175	12.1
	CL250 RF			400	27.6			400	27.6			400	27.6
WCC Steel	NPT	70	4.8	400	27.6	70	4.8	400	27.6	70	4.8	400	27.6
	CL150 RF			245	16.9			245	16.9			245	16.9
	CL300 RF			400	27.6			400	27.6			400	27.6
	CL600 RF												
	PN 16 RF			245	16.9			245	16.9			245	16.9
	PN 16/25/40 RF			400	27.6			400	27.6			400	27.6
CF8M Stainless steel	NPT	70	4.8	400	27.6	70	4.8	400	27.6	70	4.8	400	27.6
	CL150 RF			225	15.5			225	15.5			225	15.5
	CL300 RF			400	27.6			400	27.6			400	27.6
	CL600 RF												
	PN 16 RF			225	15.5			225	15.5			225	15.5
	PN 16/25/40 RF			400	27.6			400	27.6			400	27.6
CF3M Stainless steel	NPT	70	4.8	400	27.6	70	4.8	400	27.6	70	4.8	400	27.6
	CL150 RF			185	12.7			185	12.7			185	12.7
	CL300 RF			400	27.6			400	27.6			400	27.6
	CL600 RF												
	PN 16 RF			185	12.7			185	12.7			185	12.7
	PN 16/25/40 RF			400	27.6			400	27.6			400	27.6

1. Pressure ratings are based on a maximum operating temperature of 250°F / 121°C.
2. Maximum inlet, outlet and emergency pressures for constructions with Fluorocarbon (FKM) diaphragm are limited to 230 psig / 15.8 bar or the body rating limit, whichever is lower.

Overpressure Condition

Depending upon construction, backpressure control ratings are from 5 to 300 psig / 0.34 to 20.7 bar. The maximum inlet pressure can be found in Table 5. System operation within these limitations does not eliminate the possibility of damage from external sources or from debris in the flow line. The backpressure regulator should be inspected for damage regularly and after any overpressure condition.

Installation

Note

Not all codes or regulations will permit these units to be used as final overpressure protection devices.

Vertical installation with the actuator installed directly above or below the main valve is recommended but for optimal performance the actuator should be installed below the main valve. The use of a bleed valve is recommended for liquid installations that require the high pressure actuator to be mounted above the main valve. The unit will operate in horizontal installations with actuator on the side, however, this could result in premature wear of parts. Orientation of the two vents should always be down. Vents may be rotated after regulator installation to reposition so that the vent screens are down.

A control line must be installed to allow inlet pressure to register on the actuator's diaphragm. The size of the control line is indicated in the Specification sections above and should be installed four to eight pipe diameter before the backpressure regulator and in an area of pipe that is free of turbulence.

An instruction manual is provided with every regulator shipped. Refer to this for detailed installation, operation, adjustment and maintenance instructions. The instruction manual includes a complete listing of individual parts and recommended spare parts.

Applications

Note

A linear cage is recommended for applications where low flow stability is a concern but it will limit the overall capacity of the regulator.

A high-capacity linear cage is recommended for liquid applications that require a higher capacity than the linear cage and are expected to have a large turndown ratio between minimum and maximum operating flow conditions.

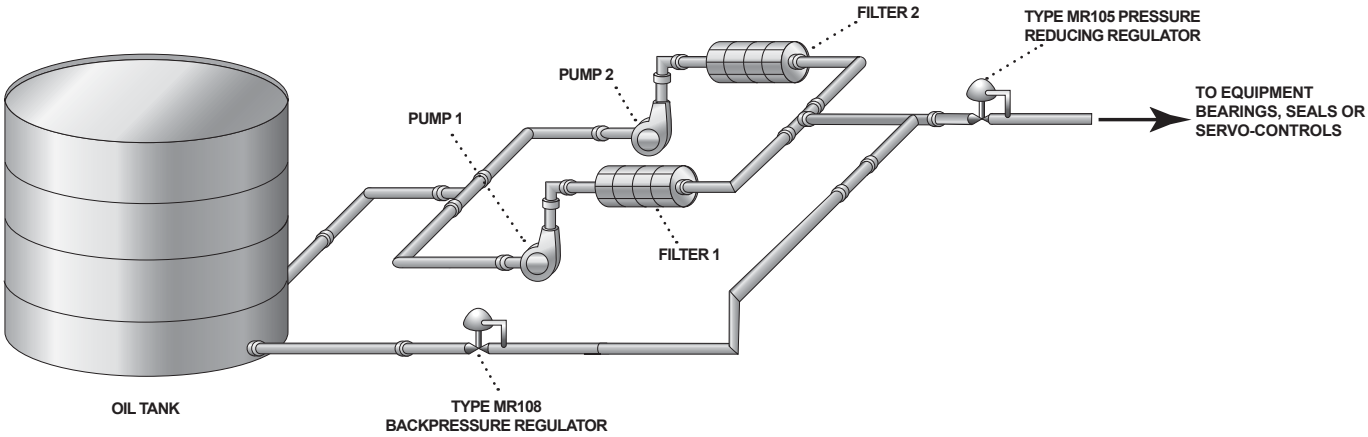

Figure 3. *Lube Oil Skid Diagram*

Lube Oil Skids (Figure 3)

Lube oil skids maintain oil flow to bearings, seals and servo-controls on critical turbomachinery assets such as air and gas compressors, steam turbines, power recovery turbines and power generating equipment. These skids are essential in keeping lube oil clean at all times and ensure maximum service life for the equipment. Because it is critical to maintain a constant flow and pressure of oil to the equipment, it is normally equipped with two pumps – the main pump and the auxiliary pump, which will take over in case of main pump failure – and filters.

In normal condition, the skids operate in the following manner:

- Lube oil is stored in the tank at atmospheric pressure.
- It is then fed to the main pump (Pump 1) which pressurizes the lube oil.
- Oil then goes through a filter.
- After filtration, oil flow is split such that a fraction is sent to a backpressure regulator to limit the supply pressure to the pressure reducing regulator. 20% of the pump rate flows through the backpressure regulator, sending back oil to the oil tank.
- The pressure reducing regulator decreases the pressure to a safe and allowable range. Flow through this regulator is 80% of pump rate.
- Oil flows to large rotating equipment lubricating bearings, e.g. turbines and compressors.

The loss of pressure or flow to the bearings or these turbomachinery assets may shut down the equipment or even the whole plant. Failure of the main pump or filter results in the following upset operation:

- Auxiliary pump (Pump 2) and filter system is brought into operation while main pump is in operation.
- Auxiliary pump ramp up rate is one second.
- Auxiliary pump produces a pressure spike that is beyond the limitations of the pressure reducing regulator.
- The backpressure regulator relieves the excess pressure back to the oil tank. Flow rate is 120% of total pump rate.

Main pump can now be shut down to allow repair of the system. High capacity direct-operated regulators are recommended for this type of application where speed of response is critical. The Type MR108 can provide fast response to the pressure spikes as described above while maintaining a constant delivery pressure of oil to the bearing.

Universal NACE Compliance

Optional materials are available for applications handling sour gases. These constructions comply with the recommendations of NACE International Sour Service Standards.

The manufacturing processes and materials used by Regulator Technologies assure that all products specified for sour gas service comply with the chemical, physical and metallurgical requirements of NACE MR0175 and/or NACE MR0103. Customers have the responsibility to specify correct materials. Environmental limitations may apply and shall be determined by the user.

Table 6. *Typical C_v Coefficient With Linear Cage - Setpoint Made at 10% Flow (For Type MR108 Low-Pressure Actuator)*

SPRING RANGE, COLOR CODE	RELIEF PRESSURE SETTING		CAPACITIES IN GPM / LPM OF WATER															
			% Pressure Buildup Over Relief Setting															
			NPS 1 / DN 25 Body				NPS 2 / DN 50 Body				NPS 3 / DN 80 Body				NPS 4 / DN 100 Body			
			10%	20%	30%	40%	10%	20%	30%	40%	10%	20%	30%	40%	10%	20%	30%	40%
	psig	bar	C_v				C_v				C_v				C_v			
5 to 14 psig / 0.34 to 0.97 bar (White)	5	0.34	1.7	1.7	4.3	5.3	4.3	8.2	11.0	15.5	5.3	8.7	12.0	16.4	5.1	8.2	12.9	16.6
	10	0.69	1.8	3.2	10.8	11.2	8.1	15.0	22.5	22.5	8.3	15.6	23.3	30.5	8.7	16.5	25.0	27.5
8 to 24 psig / 0.55 to 1.7 bar (Silver)	10	0.69	1.8	2.3	11.4	11.8	5.1	7.2	13.6	19.0	5.8	10.0	14.6	19.9	5.7	10.7	15.3	20.8
	20	1.4	6.4	10.0	13.1	13.2	7.0	17.1	22.5	22.5	9.5	17.7	27.5	30.5	10.0	19.4	27.5	27.5
13 to 30 psig / 0.89 to 2.1 bar (Orange)	15	1.0	6.4	8.5	9.5	10.0	4.7	8.5	13.1	18.8	6.0	10.3	15.6	21.1	5.9	10.6	15.6	21.6
	25	1.7	5.9	8.0	10.5	13.2	6.9	14.6	22.5	22.5	8.5	15.7	24.0	30.5	8.4	16.6	25.3	27.5
	30	2.1	5.9	10.8	13.1	13.1	8.2	18.0	22.5	22.5	9.6	17.7	28.4	30.5	9.7	19.2	27.5	27.5
15 to 35 psig / 1.0 to 2.4 bar (Red)	15	1.0	2.0	6.8	7.9	8.7	3.9	7.5	10.4	14.2	5.0	7.9	11.3	15.1	4.7	7.8	11.3	14.8
	25	1.7	5.5	6.4	9.8	13.5	5.5	10.6	16.8	22.5	6.4	11.8	17.3	24.0	6.3	12.2	18.2	24.7
	35	2.4	4.2	10.6	13.3	12.9	7.1	14.5	22.5	22.5	7.8	15.3	23.7	30.5	8.1	15.9	23.9	27.5

Table 7. *Typical C_v Coefficient With Linear Cage - Setpoint Made at 10% Flow (For Type MR108 High-Pressure Actuator)*

SPRING RANGE, COLOR CODE	RELIEF PRESSURE SETTING		CAPACITIES IN GPM / LPM OF WATER															
			% Pressure Buildup Over Relief Setting															
			NPS 1 / DN 25 Body				NPS 2 / DN 50 Body				NPS 3 / DN 80 Body				NPS 4 / DN 100 Body			
			10%	20%	30%	40%	10%	20%	30%	40%	10%	20%	30%	40%	10%	20%	30%	40%
	psig	bar	C_v				C_v				C_v				C_v			
25 to 40 psig / 1.7 to 2.8 bar (Blue)	25	1.7	3.1	5.3	8.2	11.3	5.0	8.0	12.3	16.2	5.1	8.8	12.7	17.9	4.4	6.9	9.8	13.4
	35	2.4	4.0	8.2	11.3	12.7	5.3	9.9	14.7	19.7	6.6	11.1	17.8	24.1	5.3	9.1	13.3	19.4
	40	2.8	4.5	8.5	11.4	12.4	5.6	10.7	16.1	21.9	7.2	12.6	19.9	27.4	5.6	9.8	15.7	21.2
35 to 70 psig / 2.4 to 4.8 bar (Green)	35	2.4	3.1	5.2	7.7	10.0	4.4	6.9	10.2	13.7	5.2	8.0	11.6	15.9	4.4	6.6	9.5	12.6
	50	3.4	3.9	6.6	10.3	12.3	4.6	8.5	12.8	17.8	6.1	10.8	16.6	22.7	5.0	8.6	14.0	19.0
	70	4.8	4.4	9.1	12.7	12.7	5.9	11.0	17.2	22.5	7.5	14.2	21.6	29.5	6.3	12.8	18.7	24.5
55 to 120 psig / 3.8 to 8.3 bar (White)	55	3.8	3.1	5.2	7.6	10.4	4.2	7.0	10.1	13.6	5.2	8.3	11.9	16.5	4.2	6.6	9.2	13.7
	75	5.2	3.5	6.5	10.5	10.5	5.0	8.7	13.1	17.7	6.0	10.1	15.6	21.4	5.1	8.5	14.2	18.2
	120	8.3	4.8	10.1	12.1	12.1	6.4	12.3	19.0	22.5	7.9	15.1	23.3	29.8	6.2	13.7	20.6	27.2
90 to 200 psig / 6.2 to 13.8 bar (Silver)	100	6.9	3.2	5.5	8.6	11.6	4.5	7.8	11.3	15.0	5.5	8.9	13.2	18.0	5.1	7.5	12.0	15.4
	150	10.3	4.1	8.3	9.9	9.9	5.8	10.4	15.5	21.2	6.3	11.9	18.3	26.0	5.3	10.1	16.0	22.7
	200	13.8	5.3	10.2	9.8	9.8	6.7	12.6	19.4	22.5	7.9	15.3	23.8	29.8	6.5	13.9	21.9	27.2
175 to 300 psig / 12.1 to 20.7 bar (Red)	175	12.1	3.1	5.3	7.8	10.2	4.2	6.8	9.8	13.1	5.0	7.7	11.3	15.3	4.8	7.0	9.8	13.5
	250	17.2	4.0	7.5	11.5	11.5	4.7	8.0	11.9	16.5	5.9	10.4	15.8	21.9	5.4	9.8	15.0	20.3
	300	20.7	4.4	8.7	11.9		5.2	9.1	12.4		6.6	12.3	18.8		6.0	11.1	17.3	

– Shaded areas indicate where pressure conditions exceed the pressure limit of the actuator.

Table 8. *Typical C_v Coefficient With High Capacity Linear Cage - Setpoint Made at 10% Flow (For Type MR108 Low-Pressure Actuator)*

SPRING RANGE, COLOR CODE	RELIEF PRESSURE SETTING		CAPACITIES IN GPM / LPM OF WATER															
			% Pressure Buildup Over Relief Setting															
			NPS 1 / DN 25 Body				NPS 2 / DN 50 Body				NPS 3 / DN 80 Body				NPS 4 / DN 100 Body			
			10%	20%	30%	40%	10%	20%	30%	40%	10%	20%	30%	40%	10%	20%	30%	40%
	psig	bar	C_v				C_v				C_v				C_v			
5 to 14 psig / 0.34 to 0.97 bar (White)	5	0.34					9.8	18.3	26.8	35.2	13.6	23.3	35.3	45.4	14.1	25.3	36.9	50.3
	10	0.69					17.0	33.9	41.6	42.5	23.5	44.5	64.6	68.7	25.9	47.6	66.8	69.2
8 to 24 psig / 0.55 to 1.7 bar (Silver)	10	0.69					12.2	21.9	29.6	38.8	16.3	28.0	41.6	54.3	17.5	32.0	45.2	58.8
	20	1.4					19.5	36.5	42.5	42.7	26.2	47.4	66.5	67.3	30.7	54.9	68.4	68.4
13 to 30 psig / 0.89 to 2.1 bar (Orange)	15	1.0					12.6	23.2	33.3	42.3	16.2	28.3	42.3	55.2	18.5	32.8	47.1	61.3
	25	1.7					17.4	34.3	42.7	42.5	23.8	43.1	62.8	65.9	26.3	47.7	66.3	67.1
	30	2.1					19.1	39.0	42.3	42.2	26.1	48.2	65.7	65.7	28.9	53.2	66.6	66.2
15 to 35 psig / 1.0 to 2.4 bar (Red)	15	1.0					9.7	16.6	24.6	32.0	13.3	21.7	31.3	41.2	14.5	24.0	34.4	45.4
	25	1.7					14.4	25.8	37.9	42.5	17.5	31.6	47.2	60.5	19.5	35.2	51.6	66.1
	35	2.4					16.9	34.2	41.8	41.6	22.6	41.4	59.6	65.1	25.6	46.3	65.2	65.6

– Shaded areas indicate where pressure conditions exceed the pressure limit of the actuator.

Table 9. *Typical C_v Coefficient With High-Capacity Linear Cage - Setpoint Made at 10% Flow (For Type MR108 High-Pressure Actuator)*

SPRING RANGE, COLOR CODE	RELIEF PRESSURE SETTING		CAPACITIES IN GPM / LPM OF WATER															
			% Pressure Buildup Over Relief Setting															
			NPS 1 / DN 25 Body				NPS 2 / DN 50 Body				NPS 3 / DN 80 Body				NPS 4 / DN 100 Body			
			10%	20%	30%	40%	10%	20%	30%	40%	10%	20%	30%	40%	10%	20%	30%	40%
	psig	bar	C_v				C_v				C_v				C_v			
25 to 40 psig / 1.7 to 2.8 bar (Blue)	25	1.7					11.2	19.2	27.1	35.5	13.5	22.1	30.9	41.1	15.3	22.8	31.2	42.8
	35	2.4					12.1	22.3	32.0	41.2	15.5	26.8	38.4	49.7	17.4	29.5	42.7	53.1
	40	2.8					14.2	25.3	37.2	41.9	16.6	28.4	40.2	52.0	18.5	30.6	44.0	54.8
35 to 70 psig / 2.4 to 4.8 bar (Green)	35	2.4					9.8	16.9	24.0	32.2	13.1	20.8	28.9	37.1	14.8	22.8	31.3	39.4
	50	3.4					11.3	20.5	29.9	38.7	15.4	25.6	36.2	45.4	17.4	28.0	38.8	48.9
	70	4.8					13.5	25.6	37.1	40.6	17.7	30.8	42.4	53.5	21.1	33.5	45.5	57.9
55 to 120 psig / 3.8 to 8.3 bar (White)	55	3.8					9.4	16.0	22.9	30.9	13.1	20.3	28.3	36.5	14.0	21.9	31.3	39.2
	75	5.2					11.4	19.8	29.2	32.0	15.0	24.7	34.9	44.4	16.0	28.0	38.5	49.2
	120	8.3					13.7	26.5	39.9	40.3	18.5	31.9	44.8	58.0	21.3	35.9	50.0	61.4
90 to 200 psig / 6.2 to 13.8 bar (Silver)	100	6.9					9.5	16.0	23.2	31.5	13.7	21.8	30.4	39.0	14.0	23.1	32.3	41.3
	150	10.3					12.1	21.8	32.9	39.7	16.6	28.0	39.7	51.0	18.6	29.8	42.2	54.3
	200	13.8					13.6	26.5	38.6	39.7	19.2	33.2	46.8	59.0	20.2	34.5	49.9	60.8
175 to 300 psig / 12.1 to 20.7 bar (Red)	175	12.1					9.1	15.2	22.0	29.1	12.7	19.8	27.6	35.5	13.8	21.1	29.4	37.4
	250	17.2					11.0	19.7	29.6	37.0	15.2	25.0	35.6	45.8	15.5	25.6	36.4	47.5
	300	20.7					12.5	23.6	35.0		16.7	28.5	40.5		16.9	28.7	41.4	

– Shaded areas indicate where pressure conditions exceed the pressure limit of the actuator.

Table 10. *Typical C_v Coefficient With Quick Opening Cage - Setpoint Made at 10% Flow (For Type MR108 Low-Pressure Actuator)*

SPRING RANGE, PART NUMBER, COLOR CODE	RELIEF PRESSURE SETTING		C_v AT % BUILDUP															
			NPS 1 / DN 25 Body				NPS 2 / DN 50 Body				NPS 3 / DN 80 Body				NPS 4 / DN 100 Body			
	psig	bar	10%	20%	30%	40%	10%	20%	30%	40%	10%	20%	30%	40%	10%	20%	30%	40%
5 to 14 psig / 0.34 to 0.97 bar GE42909X012 (White)	5	0.34	5.76	10.7	13.8	16	12.3	24.6	33.9	41.8	26.5	41.5	59.4	74.0	23.2	32.9	44.4	54.1
	10	0.69	11.2	15.8	16.9	17.2	23.2	40.7	48.2	48.2	40.3	71.1	94.0	103	34.1	54.8	79.2	96.9
8 to 24 psig / 0.55 to 1.7 bar GE42910X012 (Silver)	10	0.69	7.28	13.0	15.2	16.4	16.6	29.2	40.8	47.6	29.9	50.0	69.6	85.0	28.6	44.4	60.0	75.5
	20	1.4	11.7	15.6	16.7	16.9	28.0	47.1	48.2	48.2	47.7	76.8	97.1	103	44.2	73.5	98.1	124
12 to 30 psig / 0.83 to 2.1 bar GE42911X012 (Orange)	15	1.0	6.57	12.3	15.5	16.8	16.7	29.1	41.9	48.2	30.1	51.3	68.6	81.6	30.9	48.8	66.7	83.3
	25	1.7	12.1	15.7	17.3	17.5	25.0	43.1	48.2	48.2	42.3	67.0	87.6	101	43.1	72.9	98.6	124
	30	2.1	12.8	16.1	17.0	17.0	27.1	45.5	48.2	48.2	46.4	73.4	95.8	103	46.1	80.4	113	132
15 to 35 psig / 1.0 to 2.4 bar GE43002X012 (Red)	15	1.0	6.45	10.6	13.9	15.2	13.0	22.2	31.0	39.5	24.9	40.1	56.8	69.3	26.5	41.4	54.7	68.8
	25	1.7	9.05	13.6	15.7	16.3	19.0	33.6	43.6	48.2	30.9	53.8	73.2	89.4	36.2	59.7	82.1	102
	35	2.4	10.7	15.5	16.4	16.8	24.3	42.0	48.2	48.2	41.9	65.9	89.1	102	45.0	74.1	103	127

Table 11. *Typical C_v Coefficient With Quick Opening Cage - Setpoint Made at 10% Flow (For Type MR108 High-Pressure Actuator)*

SPRING RANGE, PART NUMBER, COLOR CODE	RELIEF PRESSURE SETTING		C_v at % BUILDUP															
			NPS 1 / DN 25 Body				NPS 2 / DN 50 Body				NPS 3 / DN 80 Body				NPS 4 / DN 100 Body			
	psig	bar	10%	20%	30%	40%	10%	20%	30%	40%	10%	20%	30%	40%	10%	20%	30%	40%
25 to 40 psig / 1.7 to 2.8 bar GE42906X012 (Blue)	25	1.7	5.56	9.38	12.7	14.7	12.9	24.2	36.3	42.4	21.9	34.3	47.3	57.5	27.2	45.7	57.7	70.4
	35	2.4	8.16	13.7	15.7	17.0	18.8	34.3	43.8	48.2	26.1	41.2	55.1	71.2	34.6	50.3	68.5	84.6
	40	2.8	7.59	14.5	16.9	17.5	19.0	38.0	45.9	48.2	28.0	43.3	59.6	79.4	39.0	55.8	74.0	95.0
35 to 70 psig / 2.4 to 4.8 bar GE42907X012 (Green)	35	2.4	5.54	10.4	14.5	15.5	13.6	23.0	33.1	41.2	21.7	34.2	43.7	53.2	29.1	44.3	57.4	68.1
	50	3.4	8.02	13.5	15.8	17.0	16.1	32.4	42.7	47.4	25.6	38.2	52.3	68.2	33.1	49.1	66.3	84.4
	70	4.8	10.3	15.8	17.1	17.5	24.4	41.1	48.2	48.2	27.9	46.8	69.3	87.8	35.5	57.6	83.5	109
55 to 120 psig / 3.8 to 8.3 bar GE42909X012 (White)	55	3.8	6.01	11.7	14.7	16.1	14.0	24.6	36.0	42.9	23.7	33.8	44.6	57.4	29.7	42.2	56.4	71.0
	75	5.2	7.58	14.2	16.2	17.0	16.7	31.4	42.9	48.2	25.2	38.3	55.7	71.4	31.3	48.6	67.2	87.3
	120	8.3	13.2	16.6	17.5	17.5	28.7	43.9	48.2	48.2	30.0	54.1	77.6	96.8	37.3	65.6	92.4	117
90 to 200 psig / 6.2 to 13.8 bar GE42910X012 (Silver)	100	6.9	7.92	13.8	16.0	16.9	16.4	29.8	40.5	48.0	22.8	35.3	50.0	64.1	28.8	44.2	60.8	75.6
	150	10.3	12.7	16.0	16.9	17.1	21.5	39.1	46.8	48.2	26.4	47.7	68.1	87.7	34.5	58.8	82.5	106
	200	14.8	14.7	16.8	17.3	17.3	27.4	43.9	48.2	48.2	32.9	58.6	80.6	97.9	40.6	72.3	104	130
175 to 300 psig / 12.1 to 20.7 bar GE43002X012 (Red)	175	12.1	7.90	13.5	15.7	16.6	14.4	26.3	35.6	42.0	20.6	33.7	48.1	62.5	27.2	43.7	59.7	76.2
	250	17.2	11.3	15.5	16.8	17.0	19.5	34.2	43.5	47.1	26.4	45.5	65.9	82	33.4	55.2	77.4	97.5
	300	20.7	12.9	16.7	17.1		22.8	39.5	48.2		30.2	52.9	71.1		34.8	58.9	84.8	

– Shaded areas indicate where pressure conditions exceed the pressure limit of the actuator.

Table 12. *Typical Air Capacities with Quick Opening Cage - Setpoint Made at 10% Flow (For Type MR108 Low-Pressure Actuator)*

SPRING RANGE, PART NUMBER, COLOR CODE	RELIEF PRESSURE SETTING		CAPACITIES IN SCFH / Nm³/h OF AIR															
			% Pressure Buildup Over Relief Setting															
			NPS 1 / DN 25 Body								NPS 2 / DN 50 Body							
			10%		20%		30%		40%		10%		20%		30%		40%	
	psig	bar	SCFH	Nm³/h	SCFH	Nm³/h	SCFH	Nm³/h	SCFH	Nm³/h	SCFH	Nm³/h	SCFH	Nm³/h	SCFH	Nm³/h	SCFH	Nm³/h
5 to 14 psig / 0.34 to 0.97 bar GE42909X012 (White)	5	0.34	3100	84	6100	160	8200	220	9900	270	6800	180	14,300	380	20,600	550	26,500	710
	10	0.69	9000	240	13,300	360	14,900	400	15,800	420	19,000	510	35,300	940	46,100	1240	54,000	1450
8 to 24 psig / 0.55 to 1.7 bar GE42910X012 (Silver)	10	0.69	5800	160	10,900	290	13,400	360	15,100	400	13,600	370	25,300	680	37,100	990	45,300	1210
	20	1.4	14,300	380	20,200	540	22,800	610	24,200	650	35,600	950	63,600	1700	79,100	2120	86,300	2310
12 to 30 psig / 0.83 to 2.1 bar GE42911X012 (Orange)	15	1.0	6700	180	13,300	360	17,500	470	20,000	530	17,600	470	32,500	870	49,200	1320	61,000	1640
	25	1.7	17,200	460	23,700	640	27,600	740	29,500	790	37,100	990	68,000	1820	87,200	2340	99,900	2680
	30	2.1	20,600	550	27,600	740	30,800	820	32,600	870	45,900	1230	82,000	2200	102,000	2740	112,000	3000
15 to 35 psig / 1.0 to 2.4 bar GE43002X012 (Red)	15	1.0	6600	180	11,300	300	15,800	420	18,000	480	13,700	370	24,800	660	36,400	980	48,800	1310
	25	1.7	12,800	340	20,400	550	25,100	670	27,300	730	28,300	760	53,000	1420	73,000	1960	89,800	2410
	35	2.4	19,200	520	29,800	800	33,500	900	36,200	970	46,100	1230	85,000	2280	109,000	2920	124,000	3330

SPRING RANGE, PART NUMBER, COLOR CODE	RELIEF PRESSURE SETTING		NPS 3 / DN 80 Body								NPS 4 / DN 100 Body							
			10%		20%		30%		40%		10%		20%		30%		40%	
	psig	bar	SCFH	Nm³/h	SCFH	Nm³/h	SCFH	Nm³/h	SCFH	Nm³/h	SCFH	Nm³/h	SCFH	Nm³/h	SCFH	Nm³/h	SCFH	Nm³/h
5 to 14 psig / 0.34 to 0.97 bar GE42909X012 (White)	5	0.34	14,500	390	23,800	640	35,600	950	46,200	1240	12,500	330	18,400	490	26,000	700	32,900	880
	10	0.69	32,400	870	60,200	1610	83,500	2240	99,800	2670	26,400	710	44,600	1200	67,400	1810	86,100	2310
8 to 24 psig / 0.55 to 1.7 bar GE42910X012 (Silver)	10	0.69	24,100	640	42,300	1130	61,800	1660	78,900	2120	22,200	590	36,200	970	51,100	1370	67,100	1800
	20	1.4	58,900	1580	100,000	2690	134,000	3590	154,000	4130	51,400	1380	90,400	2420	127,000	3410	169,000	4530
12 to 30 psig / 0.83 to 2.1 bar GE42911X012 (Orange)	15	1.0	30,900	830	55,600	1490	78,300	2100	97,700	2620	30,200	810	50,200	1350	72,100	1930	94,300	2530
	25	1.7	60,600	1630	102,000	2730	141,000	3780	172,000	4600	57,900	1550	104,000	2780	148,000	3970	197,000	5270
	30	2.1	75,600	2030	127,000	3410	176,000	4720	201,000	5400	70,100	1880	130,000	3480	194,000	5200	239,000	6410
15 to 35 psig / 1.0 to 2.4 bar GE43002X012 (Red)	15	1.0	25,600	690	43,500	1170	64,800	1740	82,900	2220	25,900	690	42,700	1140	59,100	1580	77,900	2090
	25	1.7	44,300	1190	81,900	2190	118,000	3160	152,000	4070	48,700	1300	85,000	2280	123,000	3310	162,000	4340
	35	2.4	76,300	2050	128,000	3430	184,000	4930	223,000	5970	76,400	2050	134,000	3590	198,000	5310	259,000	6930

Table 13. *Typical Air Capacities with Quick Opening Cage - Setpoint Made at 10% Flow (For Type MR108 High-Pressure Actuator)*

SPRING RANGE, PART NUMBER, COLOR CODE	RELIEF PRESSURE SETTING		CAPACITIES IN SCFH / Nm³/h OF AIR															
			% Pressure Buildup Over Relief Setting															
			NPS 1 / DN 25 Body								NPS 2 / DN 50 Body							
			10%		20%		30%		40%		10%		20%		30%		40%	
	psig	bar	SCFH	Nm³/h	SCFH	Nm³/h	SCFH	Nm³/h	SCFH	Nm³/h	SCFH	Nm³/h	SCFH	Nm³/h	SCFH	Nm³/h	SCFH	Nm³/h
25 to 40 psig / 1.7 to 2.8 bar GE42906X012 (Blue)	25	1.7	7900	210	14,100	380	20,200	540	24,700	660	19,200	510	38,200	1000	60,600	1600	74,800	2000
	35	2.4	14,700	390	26,300	700	32,000	860	36,700	980	35,700	960	69,300	1900	94,200	2500	111,000	3000
	40	2.8	15,100	400	30,900	830	38,000	1000	43,000	1200	39,800	1100	85,300	2300	110,000	2900	127,000	3400
35 to 70 psig / 2.4 to 4.8 bar GE42907X012 (Green)	35	2.4	9900	270	19,900	530	29,500	790	33,500	900	25,700	690	46,500	1200	71,200	1900	93,900	2500
	50	3.4	18,900	510	34,200	920	42,600	1100	48,700	1300	40,300	1100	86,800	2300	122,000	3300	144,000	3900
	70	4.8	31,900	860	52,900	1400	61,300	1600	68,600	1800	80,400	2200	146,000	3900	189,000	5100	211,000	5700
55 to 120 psig / 3.8 to 8.3 bar GE42909X012 (White)	55	3.8	15,300	410	31,900	850	42,800	1100	50,000	1300	37,700	1000	71,300	1900	111,000	3000	141,000	3800
	75	5.2	25,000	670	50,600	1400	61,400	1600	69,100	1900	58,500	1600	118,000	3200	173,000	4600	211,000	5700
	120	8.3	65,700	1800	89,500	2400	102,000	2700	109,000	2900	152,000	4100	251,000	6700	302,000	8100	325,000	8700
90 to 200 psig / 6.2 to 13.8 bar GE42910X012 (Silver)	100	6.9	33,500	900	63,000	1700	78,700	2100	88,600	2400	73,600	2000	144,000	3900	211,000	5600	267,000	7200
	150	10.3	77,400	2100	106,000	2800	120,000	3200	130,000	3500	139,000	3700	274,000	7300	353,000	9500	404,000	10,800
	200	14.8	117,000	3100	145,000	3900	162,000	4300	173,000	4600	231,000	6200	402,000	10,800	477,000	12,800	513,000	13,800
175 to 300 psig / 12.1 to 20.7 bar GE43002X012 (Red)	175	12.1	55,600	1500	103,000	2800	129,000	3400	146,000	3900	107,000	2900	212,000	5700	311,000	8300	392,000	10,500
	250	17.2	111,000	3000	166,000	4400	193,000	5200	211,000	5700	203,000	5500	387,000	10,400	532,000	14,300	618,000	16,600
	300	20.7	151,000	4000	212,000	5700	235,000	6300			283,000	7600	532,000	14,300	704,000	18,900		
SPRING RANGE, PART NUMBER, COLOR CODE	RELIEF PRESSURE SETTING		NPS 3 / DN 80 Body								NPS 4 / DN 100 Body							
			10%		20%		30%		40%		10%		20%		30%		40%	
	psig	bar	SCFH	Nm³/h	SCFH	Nm³/h	SCFH	Nm³/h	SCFH	Nm³/h	SCFH	Nm³/h	SCFH	Nm³/h	SCFH	Nm³/h	SCFH	Nm³/h
25 to 40 psig / 1.7 to 2.8 bar GE42906X012 (Blue)	25	1.7	31,400	840	52,200	1400	76,100	2000	97,700	2600	36,600	980	65,100	1700	86,800	2300	112,000	3000
	35	2.4	47,500	1300	80,100	2100	114,000	3000	156,000	4200	58,700	1600	90,900	2400	132,000	3500	172,000	4600
	40	2.8	56,400	1500	93,200	2500	136,000	3700	192,000	5200	73,000	2000	112,000	3000	158,000	4200	214,000	5700
35 to 70 psig / 2.4 to 4.8 bar GE42907X012 (Green)	35	2.4	39,600	1100	66,400	1800	90,300	2400	116,000	3100	49,400	1300	80,100	2100	110,000	3000	138,000	3700
	50	3.4	61,200	1600	98,000	2600	143,000	3800	198,000	5300	73,700	2000	117,000	3100	169,000	4500	228,000	6100
	70	4.8	87,700	2400	159,000	4300	252,000	6700	340,000	9100	104,000	2800	182,000	4900	282,000	7600	393,000	10,500
55 to 120 psig / 3.8 to 8.3 bar GE42909X012 (White)	55	3.8	61,100	1600	93,700	2500	132,000	3500	181,000	4800	71,400	1900	109,000	2900	155,000	4200	208,000	5600
	75	5.2	84,200	2300	138,000	3700	215,000	5800	294,000	7900	97,400	2600	163,000	4400	241,000	6500	334,000	9000
	120	8.3	151,000	4100	295,000	7900	455,000	12,200	608,000	16,300	175,000	4700	333,000	8900	505,000	13,500	687,000	18,400
90 to 200 psig / 6.2 to 13.8 bar GE42910X012 (Silver)	100	6.9	97,500	2600	163,000	4400	249,000	6700	341,000	9100	115,000	3100	191,000	5100	282,000	7500	374,000	10,000
	150	10.3	163,000	4400	319,000	8600	491,000	13,200	678,000	18,200	199,000	5300	366,000	9800	554,000	14,900	762,000	20,400
	200	14.8	265,000	7100	513,000	13,800	762,000	20,400	993,000	26,600	305,000	8200	590,000	15,800	914,000	24,500	1,224,000	32,800
175 to 300 psig / 12.1 to 20.7 bar GE43002X012 (Red)	175	12.1	147,000	3900	260,000	7000	401,000	10,800	559,000	15,000	180,000	4800	314,000	8400	463,000	12,400	634,000	17,000
	250	17.2	263,000	7000	492,000	13,200	770,000	20,600	1,030,000	27,600	310,000	8300	557,000	14,900	843,000	22,600	1,140,000	30,600
	300	20.7	359,000	9600	682,000	18,300	990,000	26,500			384,000	10,300	707,000	18,900	1,100,000	29,500		

– Shaded areas indicate where pressure conditions exceed the pressure limit of the actuator.

Table 14. *Typical Water Capacities with Linear Cage - Setpoint Made at 10% Flow (For Type MR108 Low-Pressure Actuator)*

SPRING RANGE, PART NUMBER, COLOR CODE	RELIEF PRESSURE SETTING		CAPACITIES IN GPM / LPM OF WATER															
			% Pressure Buildup Over Relief Setting															
			NPS 1 / DN 25 Body								NPS 2 / DN 50 Body							
			10%		20%		30%		40%		10%		20%		30%		40%	
	psig	bar	GPM	LPM	GPM	LPM	GPM	LPM	GPM	LPM	GPM	LPM	GPM	LPM	GPM	LPM	GPM	LPM
5 to 14 psig / 0.34 to 0.97 bar GE42909X012 (White)	5	0.34	4	15	4	15	11	42	14	53	10	38	20	76	28	106	41	155
	10	0.69	6	23	11	42	39	148	42	159	27	102	52	197	87	329	93	352
8 to 24 psig / 0.55 to 1.7 bar GE42910X012 (Silver)	10	0.69	6	23	8	30	41	155	44	167	17	64	25	95	49	185	71	269
	20	1.4	30	114	49	185	67	254	70	265	33	125	84	318	124	469	129	488
13 to 30 psig / 0.90 to 2.1 bar GE42911X012 (Orange)	15	1.0	26	98	36	136	42	159	46	174	19	72	36	136	58	220	86	326
	25	1.7	31	117	44	167	60	227	78	295	36	136	80	303	134	507	144	545
	30	2.1	34	129	65	246	82	310	85	322	47	178	108	409	151	572	157	594
15 to 35 psig / 1.0 to 2.4 bar GE43002X012 (Red)	15	1.0	8	30	29	110	35	132	40	151	16	61	32	121	46	174	65	246
	25	1.7	29	110	35	132	56	212	80	303	29	110	58	220	96	363	136	515
	35	2.4	26	98	69	261	90	341	90	341	44	167	94	356	154	583	169	640

SPRING RANGE, PART NUMBER, COLOR CODE	RELIEF PRESSURE SETTING		NPS 3 / DN 80 Body								NPS 4 / DN 100 Body							
			10%		20%		30%		40%		10%		20%		30%		40%	
	psig	bar	GPM	LPM	GPM	LPM	GPM	LPM	GPM	LPM	GPM	LPM	GPM	LPM	GPM	LPM	GPM	LPM
5 to 14 psig / 0.34 to 0.97 bar GE42909X012 (White)	5	0.34	12	47	21	81	31	116	43	164	12	45	20	76	33	125	44	167
	10	0.69	28	104	54	204	84	318	117	443	29	110	57	216	90	341	109	413
8 to 24 psig / 0.55 to 1.7 bar GE42910X012 (Silver)	10	0.69	19	73	35	132	53	199	75	282	19	72	37	140	55	208	78	295
	20	1.4	45	169	87	327	140	531	171	646	47	178	95	360	147	556	153	579
13 to 30 psig / 0.90 to 2.1 bar GE42911X012 (Orange)	15	1.0	24	92	44	165	69	260	97	366	24	91	45	170	69	261	99	375
	25	1.7	44	168	86	325	137	519	185	700	44	167	91	344	144	545	169	640
	30	2.1	55	208	106	403	178	672	206	780	56	212	115	435	176	666	183	693
15 to 35 psig / 1.0 to 2.4 bar GE43002X012 (Red)	15	1.0	20	76	34	128	50	190	69	262	19	72	33	125	50	189	68	257
	25	1.7	34	128	64	244	99	374	142	537	33	125	67	254	104	394	146	553
	35	2.4	48	182	99	375	160	605	220	832	50	189	103	390	161	609	197	746

Table 15. *Typical Water Capacities with Linear Cage - Setpoint Made at 10% Flow (For Type MR108 High-Pressure Actuator)*

SPRING RANGE, PART NUMBER, COLOR CODE	RELIEF PRESSURE SETTING		CAPACITIES IN GPM / LPM OF WATER															
			% Pressure Buildup Over Relief Setting															
			NPS 1 / DN 25 Body								NPS 2 / DN 50 Body							
			10%		20%		30%		40%		10%		20%		30%		40%	
	psig	bar	GPM	LPM	GPM	LPM	GPM	LPM	GPM	LPM	GPM	LPM	GPM	LPM	GPM	LPM	GPM	LPM
25 to 40 psig / 1.7 to 2.8 bar GE42906X012 (Blue)	25	1.7	16	61	29	110	47	178	67	254	26	98	44	167	70	265	96	363
	35	2.4	25	95	53	201	76	288	89	337	33	125	64	242	99	375	138	522
	40	2.8	30	114	59	223	82	310	93	352	37	140	74	280	116	439	164	621
35 to 70 psig / 2.4 to 4.8 bar GE42907X012 (Green)	35	2.4	19	72	34	129	52	197	70	265	27	102	45	170	69	261	96	363
	50	3.4	29	110	51	193	83	314	103	390	34	129	66	250	103	390	149	564
	70	4.8	39	148	83	314	121	458	121	458	52	197	101	382	164	621	224	848
55 to 120 psig / 3.8 to 8.3 bar GE42909X012 (White)	55	3.8	24	91	42	159	64	242	91	344	33	125	57	216	85	322	119	450
	75	5.2	32	121	62	235	104	394	104	394	45	170	83	314	129	488	181	685
	120	8.3	55	208	121	458	151	572	151	572	74	280	147	556	237	897	298	1128
90 to 200 psig / 6.2 to 13.8 bar GE42910X012 (Silver)	100	6.9	34	129	60	227	98	371	137	519	47	178	85	322	129	488	177	670
	150	10.3	53	201	112	424	138	522	138	522	75	284	139	526	216	818	307	1162
	200	13.8	78	295	158	598	158	598	158	598	99	375	195	738	313	1185	378	1431
175 to 300 psig / 12.1 to 20.7 bar GE43002X012 (Red)	175	12.1	43	163	77	291	118	447	160	606	58	220	99	375	148	560	205	776
	250	17.2	66	250	130	492	208	787	208	787	78	295	139	526	215	814	308	1166
	300	20.7	80	303	166	628	235	889	245	927	94	356	173	655	245	927		

SPRING RANGE, PART NUMBER, COLOR CODE	RELIEF PRESSURE SETTING		NPS 3 / DN 80 Body								NPS 4 / DN 100 Body							
			10%		20%		30%		40%		10%		20%		30%		40%	
	psig	bar	GPM	LPM	GPM	LPM	GPM	LPM	GPM	LPM	GPM	LPM	GPM	LPM	GPM	LPM	GPM	LPM
25 to 40 psig / 1.7 to 2.8 bar GE42906X012 (Blue)	25	1.7	27	100	48	183	73	275	106	400	23	87	38	144	56	212	79	299
	35	2.4	41	155	72	273	120	453	169	640	33	125	59	223	90	341	136	515
	40	2.8	48	180	87	331	143	542	205	777	37	140	68	257	113	428	159	602
35 to 70 psig / 2.4 to 4.8 bar GE42907X012 (Green)	35	2.4	32	121	52	196	78	295	111	421	27	102	43	163	64	242	88	333
	50	3.4	45	171	83	316	134	508	190	720	37	140	67	254	113	428	159	602
	70	4.8	66	249	130	493	206	781	292	1104	55	208	117	443	178	674	243	920
55 to 120 psig / 3.8 to 8.3 bar GE42909X012 (White)	55	3.8	41	154	68	255	101	380	145	547	33	125	54	204	78	295	120	454
	75	5.2	55	206	96	364	154	583	219	830	46	174	81	307	140	530	186	704
	120	8.3	91	345	181	685	291	1100	387	1464	71	269	164	621	257	973	352	1332
90 to 200 psig / 6.2 to 13.8 bar GE42910X012 (Silver)	100	6.9	58	220	97	367	151	570	213	808	54	204	82	310	137	519	182	689
	150	10.3	82	308	160	604	255	966	377	1427	68	257	136	515	223	844	329	1245
	200	13.8	117	444	238	900	384	1454	499	1890	96	363	216	818	353	1336	455	1722
175 to 300 psig / 12.1 to 20.7 bar GE43002X012 (Red)	175	12.1	69	260	112	423	170	643	239	906	67	254	101	382	148	560	212	802
	250	17.2	98	370	180	682	286	1081	409	1547	89	337	170	643	270	1022	379	1435
	300	20.7	120	453	233	882	372	1408			109	413	211	799	342	1294		

– Shaded areas indicate where pressure conditions exceed the pressure limit of the actuator.

Table 16. *Typical Water Capacities with High Capacity Linear Cage - Setpoint Made at 10% Flow (For Type MR108 Low-Pressure Actuator)*

SPRING RANGE, COLOR CODE	RELIEF PRESSURE SETTING		CAPACITIES IN GPM / LPM OF WATER															
			% Pressure Buildup Over Relief Setting															
			NPS 1 / DN 25 Body								NPS 2 / DN 50 Body							
			10%		20%		30%		40%		10%		20%		30%		40%	
	psig	bar	GPM	LPM	GPM	LPM	GPM	LPM	GPM	LPM	GPM	LPM	GPM	LPM	GPM	LPM	GPM	LPM
5 to 14 psig / 0.34 to 0.97 bar (White)	5	0.34									23	87	45	170	68	259	93	352
	10	0.69									56	213	118	445	150	568	159	603
8 to 24 psig / 0.55 to 1.7 bar (Silver)	10	0.69									40	153	76	287	107	403	145	550
	20	1.4									92	347	179	677	217	819	226	856
13 to 30 psig / 0.83 to 2.1 bar (Orange)	15	1.0									51	194	98	372	147	557	194	733
	25	1.7									91	346	188	711	243	921	252	953
	30	2.1									110	416	234	885	264	1000	273	1034
15 to 35 psig / 1.0 to 2.4 bar (Red)	15	1.0									39	149	71	267	109	411	147	555
	25	1.7									76	287	141	534	216	818	252	952
	35	2.4									105	397	222	840	282	1067	291	1103
SPRING RANGE, COLOR CODE	RELIEF PRESSURE SETTING		NPS 3 / DN 80 Body								NPS 4 / DN 100 Body							
			10%		20%		30%		40%		10%		20%		30%		40%	
	psig	bar	GPM	LPM	GPM	LPM	GPM	LPM	GPM	LPM	GPM	LPM	GPM	LPM	GPM	LPM	GPM	LPM
5 to 14 psig / 0.34 to 0.97 bar (White)	5	0.34	32	121	57	216	90	341	120	454	33	125	62	235	94	356	133	503
	10	0.69	78	295	154	583	233	882	257	973	86	326	165	625	241	912	259	980
8 to 24 psig / 0.55 to 1.7 bar (Silver)	10	0.69	54	204	97	367	150	568	203	768	58	220	111	420	163	617	220	833
	20	1.4	123	466	232	878	339	1283	356	1347	144	545	269	1018	349	1321	362	1370
13 to 30 psig / 0.83 to 2.1 bar (Orange)	15	1.0	66	250	120	454	187	708	253	958	75	284	139	526	208	787	281	1064
	25	1.7	125	473	236	893	358	1355	390	1476	138	522	261	988	378	1431	397	1503
	30	2.1	150	568	289	1094	410	1552	426	1612	166	628	319	1207	416	1575	429	1624
15 to 35 psig / 1.0 to 2.4 bar (Red)	15	1.0	54	204	92	348	138	522	189	715	59	223	102	386	152	575	208	787
	25	1.7	92	348	173	655	269	1018	358	1355	102	386	193	731	294	1113	391	1480
	35	2.4	140	530	268	1014	402	1522	456	1726	159	602	300	1136	440	1665	459	1737

– Shaded areas indicate where pressure conditions exceed the pressure limit of the actuator.

Table 17. *Typical Water Capacities with High Capacity Linear Cage - Setpoint Made at 10% Flow (For Type MR108 High-Pressure Actuator)*

SPRING RANGE, COLOR CODE	RELIEF PRESSURE SETTING		CAPACITIES IN GPM / LPM OF WATER															
			% Pressure Buildup Over Relief Setting															
			NPS 1 / DN 25 Body								NPS 2 / DN 50 Body							
			10%		20%		30%		40%		10%		20%		30%		40%	
	psig	bar	GPM	LPM	GPM	LPM	GPM	LPM	GPM	LPM	GPM	LPM	GPM	LPM	GPM	LPM	GPM	LPM
25 to 40 psig / 1.7 to 2.8 bar (Blue)	25	1.7									59	223	105	398	155	585	210	796
	35	2.4									75	283	145	548	216	816	288	1091
	40	2.8									95	358	175	663	268	1014	313	1185
35 to 70 psig / 2.4 to 4.8 bar (Green)	35	2.4									61	231	109	414	162	612	225	853
	50	3.4									84	316	159	602	241	913	324	1226
	70	4.8									119	450	234	886	354	1340	402	1521
55 to 120 psig / 3.8 to 8.3 bar (White)	55	3.8									73	276	130	492	193	732	272	1028
	75	5.2									103	391	188	712	288	1090	328	1243
	120	8.3									158	598	318	1205	498	1885	523	1978
90 to 200 psig / 6.2 to 13.8 bar (Silver)	100	6.9									99	376	176	665	265	1003	373	1411
	150	10.3									156	589	292	1105	460	1739	575	2178
	200	13.8									201	762	410	1551	622	2355	664	2511
175 to 300 psig / 12.1 to 20.7 bar (Red)	175	12.1									126	475	221	835	332	1258	456	1726
	250	17.2									182	688	342	1294	533	2019	692	2617
	300	20.7									227	858	448	1695	690	2613		

– Shaded areas indicate where pressure conditions exceed the pressure limit of the actuator.

- continued -

Table 17. *Typical Water Capacities with High Capacity Linear Cage - Setpoint Made at 10% Flow (For Type MR108 High-Pressure Actuator) (continued)*

SPRING RANGE, COLOR CODE	RELIEF PRESSURE SETTING		CAPACITIES IN GPM / LPM OF WATER															
			% Pressure Buildup Over Relief Setting															
			NPS 3 / DN 80 Body								NPS 4 / DN 100 Body							
			10%		20%		30%		40%		10%		20%		30%		40%	
	psig	bar	GPM	LPM	GPM	LPM	GPM	LPM	GPM	LPM	GPM	LPM	GPM	LPM	GPM	LPM	GPM	LPM
25 to 40 psig / 1.7 to 2.8 bar (Blue)	25	1.7	71	269	121	458	176	666	243	920	80	303	125	473	178	674	253	958
	35	2.4	96	363	174	659	259	980	348	1317	108	409	191	723	288	1090	372	1408
	40	2.8	110	416	197	746	290	1098	389	1472	123	466	212	802	317	1200	410	1552
35 to 70 psig / 2.4 to 4.8 bar (Green)	35	2.4	81	307	135	511	195	738	260	984	92	348	148	560	211	799	276	1045
	50	3.4	114	431	198	749	292	1105	380	1438	129	488	217	821	313	1185	409	1548
	70	4.8	155	587	282	1067	404	1529	530	2006	185	700	307	1162	434	1643	573	2169
55 to 120 psig / 3.8 to 8.3 bar (White)	55	3.8	102	386	165	625	239	905	320	1211	109	413	178	674	265	1003	344	1302
	75	5.2	136	515	234	886	345	1306	455	1722	145	549	266	1007	380	1438	504	1908
	120	8.3	212	802	383	1450	560	2120	752	2846	245	927	431	1631	624	2362	796	3013
90 to 200 psig / 6.2 to 13.8 bar (Silver)	100	6.9	144	545	239	905	347	1313	461	1745	147	556	253	958	368	1393	489	1851
	150	10.3	213	806	375	1419	554	2097	739	2797	239	905	400	1514	589	2229	787	2979
	200	13.8	285	1079	514	1945	755	2858	987	3736	299	1132	534	2021	804	3043	1017	3849
175 to 300 psig / 12.1 to 20.7 bar (Red)	175	12.1	176	666	287	1086	416	1575	556	2104	192	727	306	1158	443	1677	586	2218
	250	17.2	252	954	433	1639	642	2430	857	3244	257	973	444	1681	656	2483	889	3365
	300	20.7	304	1151	541	2048	800	3028	1069	4046	307	1162	545	2063	818	3096		

– Shaded areas indicate where pressure conditions exceed the pressure limit of the actuator.

Table 18. *Typical Water Capacities with Quick Opening Cage - Setpoint Made at 10% Flow (For Type MR108 Low-Pressure Actuator)*

SPRING RANGE, PART NUMBER, COLOR CODE	RELIEF PRESSURE SETTING		CAPACITIES IN GPM / LPM OF WATER															
			% Pressure Buildup Over Relief Setting															
			NPS 1 / DN 25 Body								NPS 2 / DN 50 Body							
			10%		20%		30%		40%		10%		20%		30%		40%	
	psig	bar	GPM	LPM	GPM	LPM	GPM	LPM	GPM	LPM	GPM	LPM	GPM	LPM	GPM	LPM	GPM	LPM
5 to 14 psig / 0.35 to 0.97 bar GE42909X012 (White)	5	0.34	15	57	27	100	36	140	40	150	27	100	50	190	75	280	96	360
	10	0.69	32	120	52	200	61	230	66	250	84	320	140	510	180	670	210	790
8 to 24 psig / 0.55 to 1.7 bar GE42910X012 (Silver)	10	0.69	29	110	44	170	56	210	62	230	58	220	100	380	140	510	160	610
	20	1.4	60	230	81	310	89	340	92	350	130	470	210	810	270	1000	300	1100
12 to 30 psig / 0.83 to 2.1 bar GE42911X012 (Orange)	15	1.0	31	120	51	190	65	250	74	280	76	290	130	500	180	680	220	840
	25	1.7	50	190	79	300	97	370	100	390	130	500	230	860	280	1100	330	1200
	30	2.1	61	230	95	360	110	410	120	440	160	600	270	1000	330	1200	360	1400
15 to 35 psig / 1.0 to 2.4 bar GE43002X012 (Red)	15	1.0	34	130	49	190	64	240	72	270	57	220	99	370	140	530	180	660
	25	1.7	46	170	73	280	88	330	99	370	100	390	180	670	240	920	300	1100
	35	2.4	64	240	100	380	120	440	120	470	160	590	270	1000	340	1300	390	1500
SPRING RANGE, PART NUMBER, COLOR CODE	RELIEF PRESSURE SETTING		NPS 3 / DN 80 Body								NPS 4 / DN 100 Body							
			10%		20%		30%		40%		10%		20%		30%		40%	
	psig	bar	GPM	LPM	GPM	LPM	GPM	LPM	GPM	LPM	GPM	LPM	GPM	LPM	GPM	LPM	GPM	LPM
5 to 14 psig / 0.35 to 0.97 bar GE42909X012 (White)	5	0.34	51	190	92	350	130	480	160	620	69	260	120	440	170	620	210	800
	10	0.69	120	470	210	790	280	1100	370	1400	150	560	270	1000	370	1400	460	1700
8 to 24 psig / 0.55 to 1.7 bar GE42910X012 (Silver)	10	0.69	90	340	150	570	210	790	270	1000	110	410	190	720	270	1000	350	1300
	20	1.4	190	720	330	1200	450	1700	520	2000	250	940	430	1600	570	2200	680	2600
12 to 30 psig / 0.83 to 2.1 bar GE42911X012 (Orange)	15	1.0	110	410	190	710	260	970	330	1200	140	530	240	900	340	1300	440	1600
	25	1.7	200	750	320	1200	460	1700	560	2100	250	950	430	1600	590	2200	740	2800
	30	2.1	240	910	390	1500	540	2000	630	2400	300	1100	520	2000	710	2700	820	3100
15 to 35 psig / 1.0 to 2.4 bar GE43002X012 (Red)	15	1.0	91	340	150	580	210	810	270	1000	120	470	200	740	280	1000	360	1400
	25	1.7	160	590	270	1000	380	1400	480	1800	200	750	350	1300	490	1900	630	2400
	35	2.4	220	840	390	1500	540	2000	650	2500	280	1100	490	1900	700	2600	890	3400

Table 19. *Typical Water Capacities with Quick Opening Cage - Setpoint Made at 10% Flow (For Type MR108 High-Pressure Actuator)*

SPRING RANGE, PART NUMBER, COLOR CODE	RELIEF PRESSURE SETTING		CAPACITIES IN GPM / LPM OF WATER															
			% Pressure Buildup Over Relief Setting															
			NPS 1 / DN 25 Body								NPS 2 / DN 50 Body							
			10%		20%		30%		40%		10%		20%		30%		40%	
	psig	bar	GPM	LPM	GPM	LPM	GPM	LPM	GPM	LPM	GPM	LPM	GPM	LPM	GPM	LPM	GPM	LPM
25 to 40 psig / 1.7 to 2.8 bar GE42906X012 (Blue)	25	1.7	30	110	63	240	84	320	97	370	68	260	120	440	170	650	230	870
	35	2.4	46	170	94	360	110	420	120	450	90	340	190	730	240	920	310	1170
	40	2.8	69	260	100	390	120	450	130	480	110	400	190	730	280	1050	350	1310
35 to 70 psig / 2.4 to 4.8 bar GE42907X012 (Green)	35	2.4	37	140	74	280	95	360	110	410	82	310	150	570	200	760	260	990
	50	3.4	59	220	100	390	130	470	140	510	130	500	220	840	310	1180	380	1430
	70	4.8	92	350	140	510	150	580	160	610	160	590	280	1070	400	1510	480	1830
55 to 120 psig / 3.8 to 8.3 bar GE42909X012 (White)	55	3.8	52	200	99	370	120	470	140	520	110	400	180	700	260	980	330	1230
	75	5.2	96	360	140	530	160	610	170	640	150	560	250	940	340	1290	440	1670
	120	8.3	150	580	190	730	210	780	220	810	220	820	390	1470	550	2080	650	2460
90 to 200 psig / 6.2 to 13.8 bar GE42910X012 (Silver)	100	6.9	90	340	140	540	170	640	190	700	140	540	260	970	380	1420	480	1820
	150	10.3	140	540	200	740	220	840	230	880	210	780	390	1480	550	2080	690	2610
	200	14.8	190	730	240	920	260	970	270	1020	290	1110	510	1930	730	2760	810	3070
175 to 300 psig / 12.1 to 20.7 bar GE43002X012 (Red)	175	12.1	100	390	170	660	210	800	240	900	170	660	310	1160	440	1650	570	2150
	250	17.2	160	620	240	890	270	1020	290	1100	250	950	430	1640	650	2460	770	2900
	300	20.7	200	750	270	1020	300	1130			290	1090	540	2040	750	2820		

SPRING RANGE, PART NUMBER, COLOR CODE	RELIEF PRESSURE SETTING		NPS 3 / DN 80 Body								NPS 4 / DN 100 Body							
			10%		20%		30%		40%		10%		20%		30%		40%	
	psig	bar	GPM	LPM	GPM	LPM	GPM	LPM	GPM	LPM	GPM	LPM	GPM	LPM	GPM	LPM	GPM	LPM
25 to 40 psig / 1.7 to 2.8 bar GE42906X012 (Blue)	25	1.7	110	430	170	650	230	870	280	1060	140	530	210	810	290	1090	360	1370
	35	2.4	150	570	240	890	330	1260	410	1550	170	640	270	1000	360	1370	470	1780
	40	2.8	170	640	270	1000	350	1340	450	1680	200	750	310	1190	420	1570	530	2000
35 to 70 psig / 2.4 to 4.8 bar GE42907X012 (Green)	35	2.4	120	470	190	730	260	990	320	1220	150	580	230	860	310	1170	390	1480
	50	3.4	180	670	270	1020	370	1400	470	1770	210	780	320	1230	430	1640	550	2060
	70	4.8	220	830	370	1390	500	1900	620	2340	270	1020	430	1630	590	2240	750	2850
55 to 120 psig / 3.8 to 8.3 bar GE42909X012 (White)	55	3.8	160	590	250	950	330	1260	430	1610	200	750	300	1140	410	1540	510	1930
	75	5.2	200	750	320	1220	450	1720	560	2130	250	940	390	1480	530	2010	670	2530
	120	8.3	310	1170	500	1880	670	2550	850	3210	380	1450	590	2240	820	3080	1070	4030
90 to 200 psig / 6.2 to 13.8 bar GE42910X012 (Silver)	100	6.9	220	840	360	1350	480	1810	590	2240	280	1070	430	1630	580	2200	740	2820
	150	10.3	310	1170	510	1920	700	2650	880	3320	390	1460	610	2310	820	3110	1090	4140
	200	14.8	410	1540	640	2440	910	3450	1190	4490	480	1820	780	2940	1140	4300	1460	5530
175 to 300 psig / 12.1 to 20.7 bar GE43002X012 (Red)	175	12.1	280	1070	450	1690	590	2250	750	2850	360	1370	540	2020	720	2720	930	3500
	250	17.2	390	1490	620	2330	850	3200	1090	4130	480	1810	760	2870	1070	4050	1400	5300
	300	20.7	450	1700	730	2770	1030	3880			540	2060	900	3390	1310	4940		

– Shaded areas indicate where pressure conditions exceed the pressure limit of the actuator.

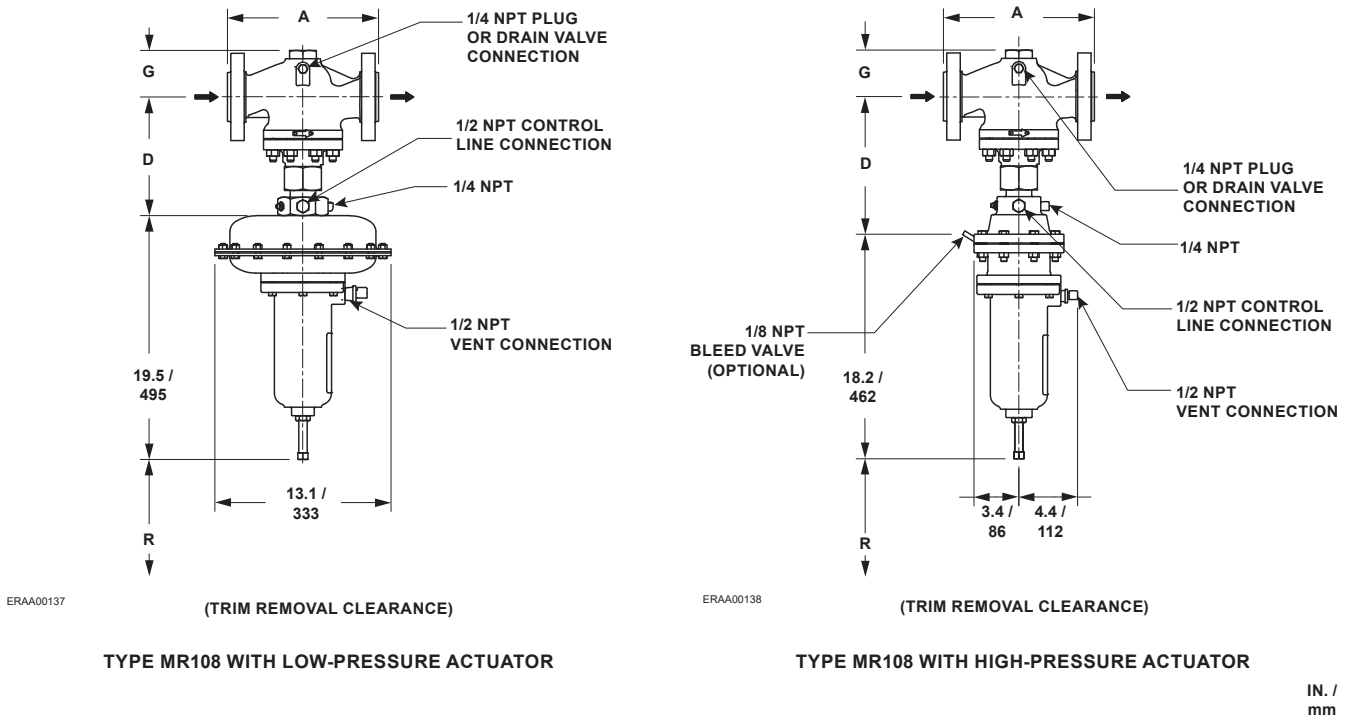

Figure 4. *Type MR108 Dimensions*

Table 20. *Type MR108 with Low-Pressure Actuator Dimensions*

DIMENSION									
Body Size		In. / mm							
		A					D	G	R
NPS	DN	NPT	CL125 FF / CL150 RF	CL250 RF / CL300 RF	CL600 RF	PN 16/25/40 RF			
1	25	8.25 / 210	7.25 / 184	7.75 / 197	8.25 / 210	7.62 / 194	8.4 / 213	2.9 / 74	3.6 / 91
2	50	11.25 / 286	10.0 / 254	10.50 / 267	11.25 / 286	10.25 / 260	8.9 / 226	3.5 / 89	4.3 / 109
3	80	- - - -	11.75 / 298	12.50 / 317	13.25 / 337	12.48 / 317	10.2 / 259	4.2 / 107	5.3 / 135
4	100	- - - -	13.88 / 353	14.50 / 368	15.50 / 394	13.78 / 350	11.5 / 292	5.3 / 135	6.5 / 165

Table 21. *Type MR108 with High-Pressure Actuator Dimensions*

DIMENSION									
Body Size		In. / mm							
		A					D	G	R
NPS	DN	NPT	CL125 FF / CL150 RF	CL250 RF / CL300 RF	CL600 RF	PN 16/25/40 RF			
1	25	8.25 / 210	7.25 / 184	7.75 / 197	8.25 / 210	7.62 / 194	9.9 / 251	2.9 / 74	3.6 / 91
2	50	11.25 / 286	10.0 / 254	10.50 / 267	11.25 / 286	10.25 / 260	10.3 / 262	3.5 / 89	4.3 / 109
3	80	- - - -	11.75 / 298	12.50 / 317	13.25 / 337	12.48 / 317	11.6 / 295	4.2 / 107	5.3 / 135
4	100	- - - -	13.88 / 353	14.50 / 368	15.50 / 394	13.78 / 350	13.0 / 330	5.3 / 135	6.5 / 165

Ordering Information

Use the Specifications section on page 2 and carefully review the description to the right of each specification. Use this information to complete the Ordering Guide on this page. Specify the desired selection wherever there is a choice to be made. Then send the Ordering Guide to your local Sales Office.

Ordering Guide

Body Size (Select One)
- ☐ NPS 1 / DN 25
- ☐ NPS 2 / DN 50
- ☐ NPS 3 / DN 80
- ☐ NPS 4 / DN 100

Actuator Type (Select One)
- ☐ Low Pressure
- ☐ High Pressure

Cage Type (Select One)
- ☐ Linear (All Sizes)
- ☐ High Capacity Linear Cage
- ☐ Quick Open

Body Material and End Connection Style (Select One)

Cast Iron
- ☐ NPT (1 or 2 NPT only)
- ☐ CL125 FF
- ☐ CL250 RF

WCC Steel
- ☐ NPT (1 or 2 NPT only)
- ☐ CL150 RF
- ☐ CL300 RF
- ☐ CL600 RF
- ☐ PN 16 RF
- ☐ PN 16/25/40 RF (NPS 1 or 2 / DN 25 or 50 only)

CF8M Stainless Steel
- ☐ NPT (1 or 2 NPT only)
- ☐ CL150 RF
- ☐ CL300 RF
- ☐ CL600 RF
- ☐ PN 16 RF
- ☐ PN 16/25/40 RF (NPS 1 or 2 / DN 25 or 50 only)

CF3M Stainless Steel
- ☐ NPT (1 or 2 NPT only)
- ☐ CL150 RF
- ☐ CL300 RF
- ☐ CL600 RF
- ☐ PN 16 RF
- ☐ PN 16/25/40 RF (NPS 1 or 2 / DN 25 or 50 only)

Diaphragm, O-rings and Seal Materials (Select One)
- ☐ Nitrile (NBR)
- ☐ Fluorocarbon (FKM)
- ☐ EPDM

Actuator Type and Set Pressure Range (Select One)

Low-Pressure Actuator
- ☐ 5 to 14 psig / 0.35 to 0.97 bar, White
- ☐ 8 to 24 psig / 0.55 to 1.7 bar, Silver
- ☐ 12 to 30 psig / 0.83 to 2.1 bar, Orange
- ☐ 15 to 35 psig / 1.0 to 2.4 bar, Red

High-Pressure Actuator
- ☐ 25 to 40 psig / 1.7 to 2.8 bar, Blue
- ☐ 35 to 70 psig / 2.4 to 4.8 bar, Green
- ☐ 55 to 120 psig / 3.8 to 8.3 bar, White
- ☐ 90 to 200 psig / 6.2 to 13.8 bar, Silver[1]
- ☐ 175 to 300 psig / 12.1 to 20.7 bar, Red[2]

Optional
- ☐ Pressure-Loaded Actuator
- ☐ Drain Valve
- ☐ NACE Construction
- ☐ Bleed Valve (For High-Pressure Actuator Only)

Main Valve Replacement Parts Kit (Optional)
- ☐ Yes, send one replacement parts kit to match this order.

Actuator Replacement Parts Kit (Optional)
- ☐ Yes, send one replacement parts kit to match this order.

1. Maximum setpoint is limited to 150 psig / 10.3 bar for constructions with Fluorocarbon (FKM) diaphragm.
2. Not applicable for constructions with Fluorocarbon (FKM) diaphragm.

Ordering Guide (continued)

Regulators Quick Order Guide	
* * *	Readily Available for Shipment
* *	Allow Additional Time for Shipment
*	Special Order, Constructed from Non-Stocked Parts. Consult your local Sales Office for Availability.
Availability of the product being ordered is determined by the component with the longest shipping time for the requested construction.	

Specification Worksheet

Application:

Specific Use _____

Line Size _____

Fluid Type _____

Specific Gravity _____

Temperature _____

Pressure:

Maximum Inlet Pressure _____

Minimum Inlet Pressure _____

Set Pressure _____

Maximum Flow _____

Accuracy Requirements:

Less Than or Equal To:

☐ 5% ☐ 10% ☐ 20% ☐ 40%

Construction Material Requirements (if known):

_____

_____

Webadmin.Regulators@emerson.com
Fisher.com
Facebook.com/EmersonAutomationSolutions
LinkedIn.com/company/emerson-automation-solutions
X.com/EMR_automation

Emerson

Americas
McKinney, Texas 75069 USA
T +1 800 558 5853
+1 972 548 3574

Europe
Bologna 40013, Italy
T +39 051 419 0611

Asia Pacific
Singapore 128461, Singapore
T +65 6777 8211

Middle East and Africa
Dubai, United Arab Emirates
T +971 4 811 8100

D103257X012 © 2010, 2025 Emerson Process Management Regulator Technologies, Inc. All rights reserved. 05/25.
Fisher™ is a mark owned by Fisher Controls International LLC, an Emerson company. The Emerson logo is a trademark and service mark of Emerson Electric Co. All other marks are property of their respective owners.

Neither Emerson nor any of its affiliated entities assume responsibility for the selection, use or maintenance of any product. Responsibility for proper selection, use, and maintenance of any product remains solely with the purchaser and end user.

The contents of this publication are presented for informational purposes only, and while every effort has been made to ensure their accuracy, they are not to be construed as warranties or guarantees, express or implied, regarding the products or services described herein or their use or applicability. All sales are governed by our terms and conditions, which are available upon request. We reserve the right to modify or improve the designs or specifications of such products at any time without notice.

EMERSON™