Product Data Sheet
00813-0100-4512, Rev. AC
August 2026

Rosemount CT5100(Ex) Continuous Gas Analyzer



- The Rosemount CT5100(Ex) Continuous Gas Analyzer is the first Quantum Cascade Laser (QCL) system developed for process gas analysis and emissions monitoring.
- The Rosemount CT5100(Ex) is available in two variants: a certified system, housed in a purged and pressurized enclosure for hazardous area installations, and a non-certified system Rosemount CT5100 for use in non-hazardous areas.
- Both can house up to six lasers to measure multiple components in the gas stream simultaneously.

Features and benefits

Multi-component QCL/TDL analyzer

- Measures up to ten gases simultaneously
- Accurate and sensitive gas measurements
- Excellent linearity of response and repeatability
- Low, long term drift, and minimizes calibration intervals
- Low maintenance and low lifetime costs
- Continuous health diagnostic reporting
- Embedded ARM processor for fully autonomous operation
- Intuitive, simple front panel user interface allows access to all instrument functions

Field serviceable and field configurable

Interchangeable modular configuration for up to six lasers

Hazardous certification

- Europe: ATEX II3G Ex p IIC T3
- North America: Class I, Division 2, Groups A, B, C, D, and T3

Applications

Applications type

- Process gas analysis
- Continuous emissions monitoring
- Ammonia slip

Engineered sample handling systems

A process gas analyzer is only as good as the quality of the sample it measures. This is why Emerson provides custom-engineered sample handling systems designed to the meet the application's specifications. These systems are rigorously tested before it ships to the customer.

Typical features include:

- Heated and open-panel designs
- Automatic calibration/validation available as an option
- Variety of sample probes to extract a reliable and stable sample from the process stream
- Other specifications are custom engineered as needed

Specifications

Note

Repeatability is ±1% of reading or the Limit of Detection (LOD), whichever is greater.

Table 1: Rosemount CT5100(Ex) Continuous Gas Analyzer

Specifications	Value	
Application	Process Gas Analysis/CEMS	
Measurement technique	Mid–infrared optical absorption spectroscopy	
Mid IR source	Quantum Cascade Laser	
Near IR source	Interband Cascade Laser Diode Laser	
Laser classification	CLASS 1 BS EN 60825–1:2014 safety of laser products equipment classification and requirements (1)	
Performance		
Repeatability	±1%	
Linearity	$R^2 > 0.999$	
Measurement rate	1 Hz	
Environmental		
Ambient temperature	–20 to 55 °C (–4 to 131 °F).	
Sample gas temperature range	**North America**	50 to 80 °C (122 to 176 °F)(2)
	Europe	50 to 160 °C (122 to 320 °F)(2)
Humidity range	10–95%, non–condensing	
Protection class	IP66/NEMA® 4X(3)	
Hazardous area classification	**North America**	Class I, Division 2, Groups A, B, C, and D;T3. Tamb –20 to +55 °C
	Europe	II 3 (1) G Ex d [ia] op is pzc IIC T3 Gc Tamb = –20 to +55 °C
	Rest of the World	IECEx Ex db ia op is pzc [ia Ga] IIC T3 Gc
Communications		
Analog signal out	Optional 4–20 mA	
Digital signal out	Modbus® over TCP/IP	
Health monitoring	Digital healthline(4) or NAMUR NE107 status report	
Inlet gas port connector	6 mm (¼–in.)Swagelok® type(5)	
Outlet gas port connector	6 mm (¼–in.) Swagelok type(5)	
Purge connector	Purge inlet(6) ⅜–in. or10 mm	
Electrical Rating		
Power supply	110 Vac 60 Hz/230 Vac 50 Hz	
Mechanical		
Size	575 x 300 x 786 mm 22.64 x 11.81 x 30.95–in.	
Weight	55 kg (121 lb.)	
Installation	Wall mount	

(1) This is identical to IEC 60825–1:2014.
(2) This is factory set.
(3) This is the main enclosure compartment.
(4) One per measurement.
(5) Specify this on order.
(6) Certified system only.

Note
Repeatability is ±1% of reading or the Limit of Detection (LOD), whichever is greater.

Table 2: Measurement Performance – Continuous Emissions Monitoring

Component Name	Measurement Specification				
	Symbol	Range	LOD	Range	LOD
Nitric oxide	NO	0–10 ppmv	0.1 ppmv	0–15 mg/Nm^3	0.2 mg/Nm^3
Nitrogen dioxide	NO_2	0–10 ppmv	0.04 ppmv	0.04 mg/Nm^3	0.1 mg/Nm^3
Oxygen	O_2	0–25%	0.04%	0–25%	0.04%
Carbon monoxide	CO	0–50 ppmv	0.04 ppmv	0–60 mg/Nm^3	0.05 mg/Nm^3
Carbon dioxide	CO_2	0–12%	0.01%	0–12%	0.01%
Sulfur dioxide	SO_2	0–200 ppmv	0.2 ppmv	0–600 mg/Nm^3	0.6 mg/Nm^3

Note
Other measurement ranges are available on request.

Table 3: Measurement Performance – DeNOx/Ammonia Slip

Component Name	Measurement Specification				
	Symbol	Range	LOD	Range	LOD
Nitric oxide	NO	0–200 ppmv	0.2 ppmv	0–250 mg/Nm^3	0.3 mg/Nm^3
Nitrogen dioxide	NO_2	0–100 ppmv	0.05 ppmv	0–200 mg/Nm^3	0.1 mg/Nm^3
Nitrous oxide	N_2O	0–200 ppmv	0.2 ppmv	0–400 mg/Nm^3	0.4 mg/Nm^3
Ammonia	NH_3	0–100 ppmv	0.1 ppmv	0–75 mg/Nm^3	0.1 mg/Nm^3

Note
Other measurement ranges are available on request.

Other gases and ranges are available on request. The ranges and detection limits provided indicate typical analyzer performance, but may change depending on your application. Contact Emerson.com/Global for more information.

Lifecycle services and support

Our team of trained and certified field experts know and understand the requirements needed to develop a customized service program to suit your application. We provide complete turn-key services and problem solving to assist you every step of the way. From pre-installation services to ongoing maintenance and support long after commissioning, we have the expertise to ensure your Rosemount analyzer runs at ideal operating conditions during its lifecycle.

Field services include, but are not limited to the following:

- Startup and commissioning
- Scheduled maintenance
- On-site support
- Field retrofits
- Training

Training services

Whether your goal is to reduce maintenance costs, or maximize up-time, Rosemount offers a complete list of training courses and continuous support programs to ensure your technicians know how to properly operate and maintain the analyzer during its lifecycle.

All training courses are taught by Rosemount-certified instructors who work with each student to provide the necessary hands-on training, theory, and conceptual knowledge needed to perform on the job functions safely and accurately.

Recommended Installation

The drawings below represent the minimum recommended installation guidelines for the Rosemount CT5100(Ex) Continuous Gas Analyzer. Consult Emerson.com/Global for detailed installation recommendations for your application.

Figure 1: Rosemount CT5100(Ex) Continuous Gas Analyzer Dimensional Drawings (Certified Version)

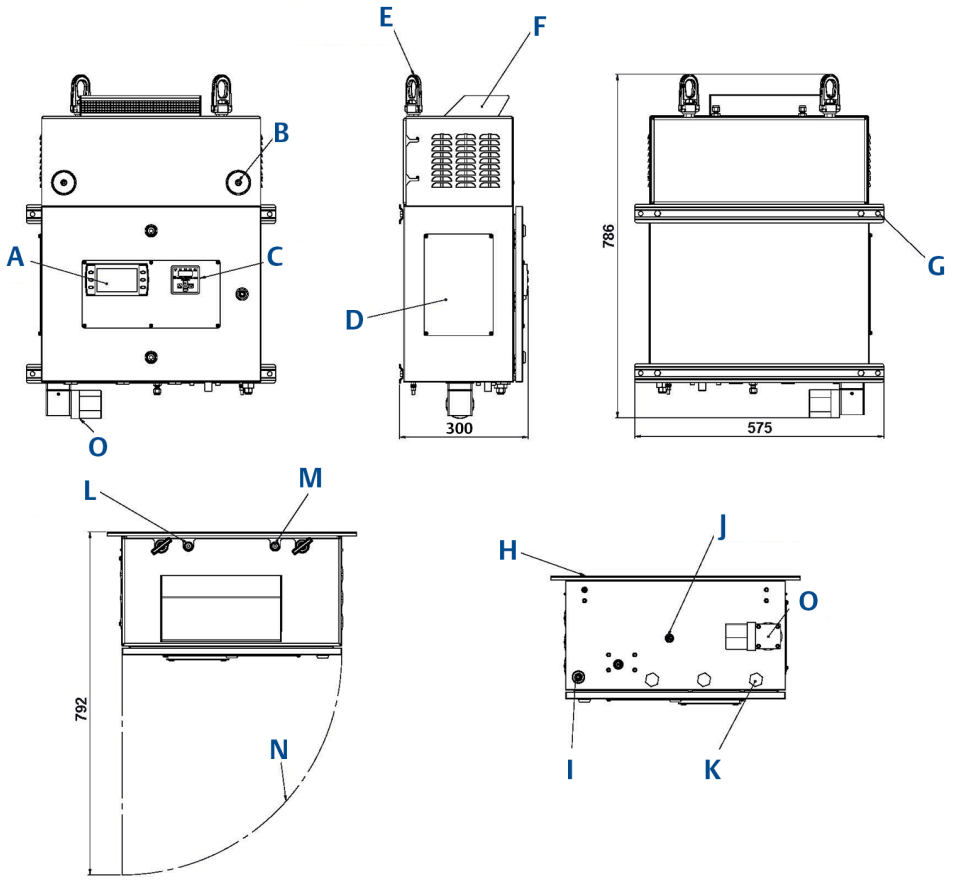

A. **Operator interface panel**
B. **¼ turn quick release catch**
C. **Purge control panel**
D. **Ratings plate**
E. **Removable lifting points**
F. **Ventilation**
G. **Four off mounting hole positions**
H. **Wall**
I. **Air supply in**
J. **Incoming air supply**
K. **Cable entry points**
L. **Sample supply port**
M. **Sample return port**
N. **Door opening**
O. **Purge vent**

For more information: Emerson.com

©2026 Emerson. All rights reserved.

Emerson Terms and Conditions of Sale are available upon request. The Emerson logo is a trademark and service mark of Emerson Electric Co. Rosemount is a mark of one of the Emerson family of business units. All other marks are the property of their respective owners.

ROSEMOUNT™

EMERSON™