Product Data Sheet
MS-00813-0100-0770, Rev AB
November 2025

Rosemount™ 770XA

Natural Gas Chromatograph



The Rosemount 770XA Gas Chromatograph provides the most accurate analysis of natural gas available in a field mounted gas chromatograph (GC). This GC features a design that increases analytical capability, maximizes ease of use, and widens the range of analysis options in a GC with an ambient temperature rating of -4 °F (-20 °C) to 140 °F (60 °C). These advanced features make this GC ideal for natural gas custody transfer and applications requiring advanced analysis, such as C9+ (with hydrocarbon dew point and cricondentherm calculations), total sulfur, and C6+ with hydrogen sulfide (H_2S).

Features and benefits

Easy to use

- Single bolt analytical valve design for easy overhaul in the field
- Large column canister for both micro-packed and capillary columns of long lengths
- Internal stream selection and valve actuation solenoids that can be replaced easily in under five minutes
- Easy to use Rosemount MON2020 software for diagnostics
- Four conduit entry points in the electronics housing for easy wiring access
- One package for fiscal metering or gas quality
- Custody transfer analysis from C6+ to C9+
- Contaminant monitoring - trace hydrogen sulfide, carbon dioxide, oxygen, etc.
- Combine measurements and reduce analysis cost
  - C9+ with hydrocarbon dew point
  - C6+ with H_2S (3 to 30 ppm H_2S)
  - C6+ with oxygen
  - C6+ with helium and hydrogen
  - C9+ with methanol and water
  - Total sulfur
  - C6+ with total sulfur
  - C9+ with total sulfur

Reduced installation costs

- Flexible power with both 120/240 Vac and 24 Vdc options
- Integrated controller electronics
- Pipe-mount, wall-mount, or floor-mount

Contents

Features and benefits 2
Applications 3
Superior performance 6
Controller electronics and communication 9
Data archiving and reports 10
MON2020 10
Integration with third-party networks 12
Environmental chamber testing title 13
Specifications 14
Recommended installation 18

Lower operational costs

- No shelter or instrument air required
- Low carrier and power consumption
- Longest gas chromatograph valve and column warranties available

Unmatched measurement performance

- Best C6+ heating value/BTU repeatability available: ±0.0125% of heating value (+/- 0.125 BTU/1000 BTU) in temperature controlled environments. ±0.025% of heating value (+/- 0.25 BTU/1000 BTU) in uncontrolled environments (–4 ° F to +140 ° F (–20 ° F to +60 ° C)) with a three-minute cycle time.
- Best in industry C9+ repeatability available to ±0.025% , 0.25 BTU of heating value (BTU/1000 BTU) for controlled environments. ±0.05% (0.5 BTU/1000 BTU) of heating value for uncontrolled environments (–4 ° F to +140 ° F (–20 ° F to +60 ° C)) with a five-minute cycle time.

Applications

Standard natural gas applications

Emerson has made popular end-user energy and gas quality applications standard on all Rosemount gas chromatographs. Applications may vary by components of interest, analysis time, reduced hardware, or improved precision. For non-standard natural gas applications, Emerson can custom-engineer the Rosemount 770XA Gas Chromatograph to fit most requirements.

Energy measurement (to C6+, C7+, and C9+)

The Rosemount 770XA Gas Chromatograph standard applications for energy measurement include C6+ (three minutes), C7+ (ten minutes), and C9+ (five minutes). The latest Gas Processing Association (GPA) 2145/2172, American Gas Association (AGA)-8, and International Organization for Standardization (ISO) 6976 calculations are available and can be configured to be calculated together.

Table 1: C6+/C7+ /C9+ standard measurement ranges

Component	C6+	C7+	C9+
Methane	65 to 100 mole %	65 to 100 mole %	65 to 100 mole %
Ethane	0 to 20 mole %	0 to 20 mole %	0 to 20 mole %
Propane	0 to 10 mole %	0 to 10 mole %	0 to 10 mole %
n-Butane	0 to 5 mole %	0 to 5 mole %	0 to 5 mole %
Iso-butane	0 to 5 mole %	0 to 5 mole %	0 to 5 mole %
n-Pentane	0 to 1 mole %	0 to 1 mole %	0 to 1 mole %
Iso-pentane	0 to 1 mole %	0 to 1 mole %	0 to 1 mole %
Neo-pentane	0 to 1 mole %	0 to 1 mole %	0 to 1 mole %
Nitrogen	0 to 20 mole %	0 to 20 mole %	0 to 20 mole %
Carbon dioxide	0 to 20 mole %	0 to 20 mole %	0 to 20 mole %
Hexanes	0 to 0.5 mole %	0 to 0.5 mole %	0 to 0.5 mole %
Heptanes	N/A	0 to 0.1 mole %	0 to 0.1 mole %
Octanes	N/A	N/A	0 to 0.01 mole %
Nonane	N/A	N/A	0 to 0.01 mole %

Gas quality analysis

Natural gas contaminants, such as hydrogen sulfide and oxygen, reduce pipeline integrity over time. The Rosemount 770XA Gas Chromatograph (GC) can easily measure most contaminants for online quality assurance.

The GC can combine contaminant monitoring with energy measurements for complete custody transfer analysis. To the extent possible, these combined applications use independent gas chromatograph valves, detectors, and columns for each primary measurement. This technique offers greater reliability, increased speed, and easier troubleshooting. This application approach also simplifies field upgrades and re-applications in the analyzer by minimizing internal piping changes.

Hydrocarbon dew point monitoring

The Rosemount 770XA Gas Chromatograph offers accurate and reliable hydrocarbon dew point calculations from the extended C9+ analysis by combining two detectors and a controller within a single housing, reducing complexity, minimizing maintenance and spare parts requirements, simplifying the scope of analyzers at the pipeline, and reducing the overall cost of the analytical solution.

This GC integrates hydrocarbon dew point software to provide dew point temperatures for up to four user-entered pressures and the cricondentherm using the Peng-Robinson or the Redlich-Kwong-Suave equations of state. Use analog or Modbus® inputs from another device for the calculation pressures to get real-time dew point results.

The measured C6/C7/C8 and C9+ components allow for an accurate determination of the hydrocarbon dew point for pipeline-quality natural gas using reliable and low-maintenance thermal conductivity detectors (TCDs), avoiding standalone dew point analyzers or flame ionization detectors (FIDs), which require additional utility gas requirements. For heavier gas applications where significant amounts of components above C10 are expected, an FID can be combined with a TCD to provide further extended analysis.

Custom applications

If the standard applications do not fit your needs, Emerson can customize the Rosemount 770XA Gas Chromatograph to meet many measurement requirements. Submit a completed application data sheet with your request or ask our application engineers for assistance.

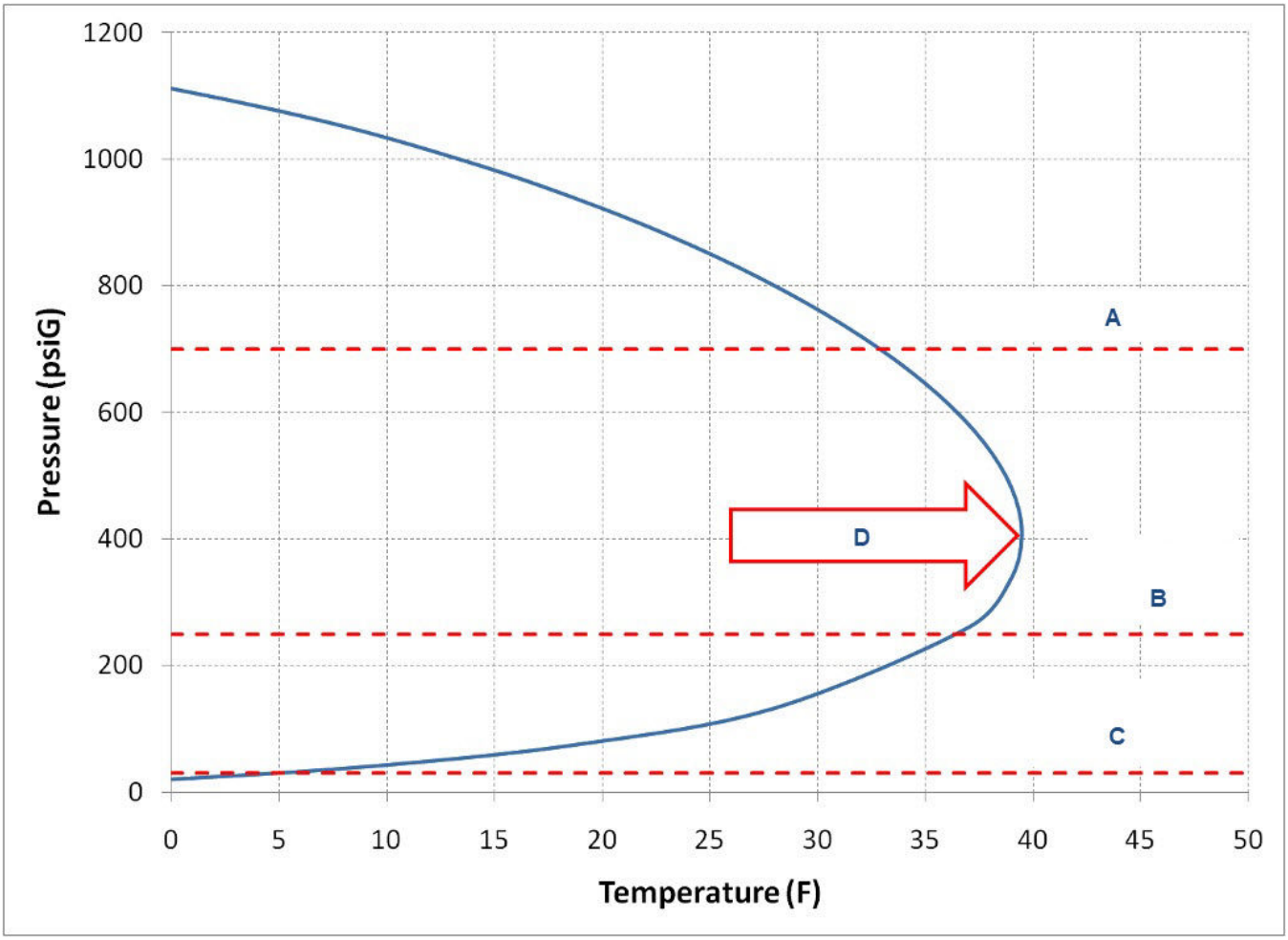

A typical phase curve showing the cricondentherm and the hydrocarbon dew point calculated at three pressures for practical operational use.

A. Pipeline pressure
B. Regulated pressure
C. Sample handling pressure
D. Cricondentherm

Superior performance

Modular analytical oven

Building off of the proven valves, columns, and detectors of the Rosemount 500 and Rosemount 700 Gas Chromatographs (GCs), the Rosemount 770XA Gas Chromatograph analytical oven has been designed for maximum serviceability and expandability. It features a clean architecture with few cables, making the analyzer simple to maintain. In addition, the oven features a unique, pivot-top base that provides maximum accessibility to all of the components below.

Multiple temperature control zones and up to four 6-port or 10-port valves and two independent detectors provide extreme application flexibility and range. All components in the oven are completely accessible and serviceable in the field to reduce the total cost of ownership over the life of the analyzer.

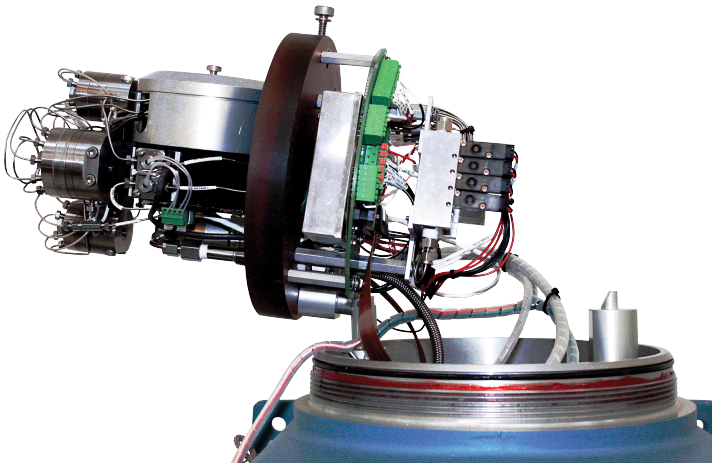

Unique analytical assembly design pivots to allow instant access to all components.

Gas chromatograph valves

The GC has the capacity to support up to six 6-port or 10-port diaphragm/piston gas chromatograph valves. These pneumatic valves are guaranteed for the life of the GC and are specified to operate over five million cycles. The unique, double-diaphragm design removes the need for springs, O-rings, and lubrication. To service the valve, the operator just needs to replace a cost-effective diaphragm set, which can normally be done in less than ten minutes.



Thermal conductivity detectors (TCDs)

The TCD is the detector of choice for most applications due to its universal response to components of interest in natural gas and light refinery and hydrocarbon processing gas analysis. The TCD in the Rosemount 770XA GC is able to measure well beyond the normal ranges seen in other designs by performing many applications with low parts-per-million measurement requirements. This greatly simplifies the GC design and lowers the cost to the end user when a simple and rugged TCD can be used.

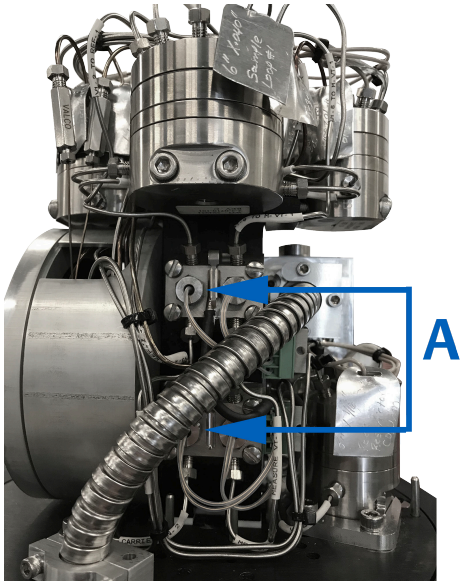

A. TCDs

Micro flame photometric detector (µFPD)

The µFPD photo multiplier tube (PMT) module enables the measurements of trace sulfur compounds when integrated with Rosemount 770XA GCs.

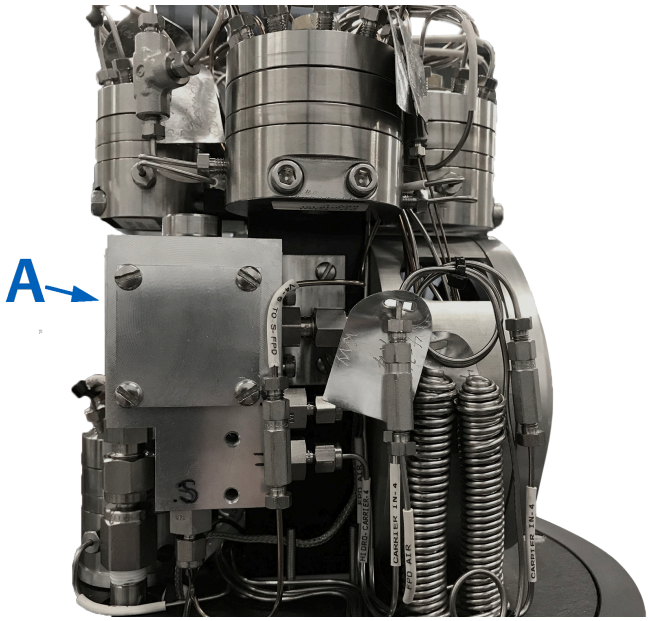

A. µFPD burner

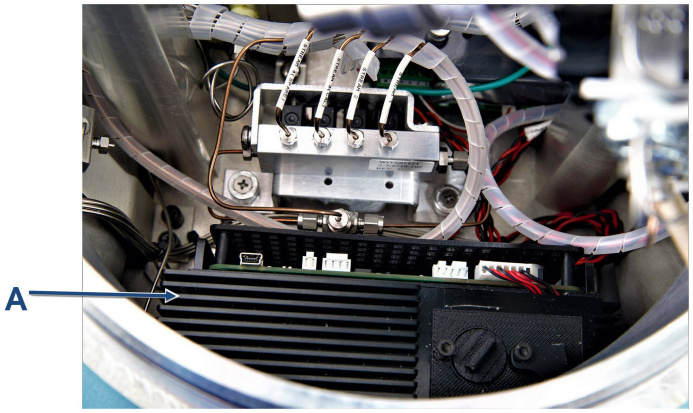

A. µFPD PMT Module

The µFPD is installed in the analyzer oven. The associated electronics are mounted underneath. The design eliminates the need for instrument air, greatly reducing installation cost of the GC. The µFPD module comes fully integrated with the GC.

Micro-packed columns

The GC offers micro-packed columns with a superior combination of features found in both capillary and conventional packed columns: speed, sharp peak resolution, and low carrier gas consumption. In addition, the unique design provides for greatly extended column life and the longest warranty available on the market. If required, the standard capillary columns in GC applications can also be used.

Stream switching module

The internal sample stream switching module is available in four-stream or eight-stream versions. This saves end users the additional hardware and assembly costs associated with externally mounted stream selection assemblies. The module uses inert gas for solenoid actuation, with easy access for tubing changes and maintenance. For applications with varying stream composition, a double-block-and-bleed configuration is optionally available.

Controller electronics and communication

Modular electronics

The controller electronics, option cards, and field termination boards are all packaged conveniently in the lower section of the gas chromatograph (GC). Customer-terminated power and output connections are also made in this lower section of the GC.

Touch key local operator interface (optional)

The local operator interface (LOI) permits maintenance and operation of a GC without a laptop or personal computer (PC). The LOI is a high-resolution color display that is touch key infrared activated and supports all core GC operations.

Features include:

- Color LCD display with full VGA (640 x 840 pixels) resolution
- User-adjustable auto-backlighting for easy viewing
- Eight infrared-activated touch keys and screensaver

In addition, the LOI:

- Eliminates external magnetic pen requirements and tactile buttons.
- Maintains the Rosemount 770XA's hazardous area classifications.
- Includes complete GC status, control, and diagnostics, including full chromatogram display and alarm messages.

Local indication and operation panel

You can view analyzer health and valve status through the GC's front cover. The panel displays green (healthy), yellow (warning), and red (failure) LEDs, along with LEDs indicating gas chromatograph valve on/off actuations, power, and central processing unit (CPU) health. Each valve can be actuated manually for simplified troubleshooting and fast system purging after maintenance.

Flexible inputs and outputs (I/O)

The GC is built with enough I/O to handle most applications, including:

- Five discrete digital outputs
- Five discrete digital inputs
- Two analog inputs
- Six analog outputs
- Three Modbus® serial ports (RS-232/RS-485/RS-422)
- Two Modbus-enabled Ethernet ports (one with DHCP server for local access)

If you need more I/O, the GC includes two expansion slots that use the I/O cards from the ROC-800 family of flow computers.

Data archiving and reports

The gas chromatograph (GC) includes expanded reports and data archiving that conforms to the latest API 21.1 requirements for metering audit purposes and backup of the primary systems, such as flow computers or SCADA systems. Every analysis is time and date stamped and archived for retrieval via the Rosemount MON2020 software.

Security	Four levels of password-protected security, configurable to read/write or read-only for third party access.
Event logs	A continuous record of all operator changes, with time, date, and user identification name records.
Alarm logs	A continuous record of all historical alarms, time and date stamped with alarm state and description.
Maintenance log	A scratch pad for tracking maintenance or testing performed on the GC system.
Archiving	Over 31,700 analysis records (which is over 65 days for a C6+ three-minute application), 370 final calibration records, and 370 validation records are archived automatically with time and date stamps.
Chromatograms	Over 1,700 worth of analysis chromatograms and 370 chromatograms and user-selected protected chromatograms that are permanently stored, including the factory testing chromatograms.
Drawings and documents	User manuals and drawings in several file formats are stored in the controller memory for convenient retrieval using the MON2020 software, eliminating the risk of manuals and drawings being misplaced. User-generated documents can also be uploaded (such as maintenance check sheets or installation drawings) to the controller for later retrieval.

Standard reports include

Average reports	Hourly, 24-hour, weekly, monthly, every run, and variable averages
Analysis reports	Physical property calculations for component and group analysis and alarms
Raw data report	Retention times, peak areas, detector number, method, integration start/stop, and peak width for analysis
Calibration report	Raw component data, new response factors, retention times, and deviation from last calibration
Final calibration report	Results from the calibration response factors and retention time adjustments
Validation report	Nominal value, percentage deviation, and measured value
Final validation report	Status of validation of nominal value and measured value as well as the difference in value, percent deviation, and allowed percent deviation
Molecular weight vs. response factor graph	The response factors plotted on a log/log graph as outlined in the GPA2198-03 Appendix B to confirm the fidelity of the detector response across components

MON2020

Emerson has designed the gas chromatograph (GC) to operate unattended. MON2020, Emerson proprietary desktop software, allows complete control of the GC locally or remotely.

When adjustments are needed, MON2020 can be used to:

- Start or stop analysis, calibration, or validation cycles.
- Generate and save current and historical analysis and calibration reports.

- Review and modify analytical settings.
- Upload and display multiple chromatograms for comparison.
- Upload and trend any of the measured results.
- Export data to text, HTML, or Microsoft® Excel™ for use in third-party applications.
- Check on original calibration against the last calibration.
- Perform GC operation checks and modifications simultaneously.
- Upload and view manuals and drawings stored in the GC.

MON2020 is a Microsoft Windows®-based software program simplifying:

- Analyzer configuration
- Maintenance
- Data collection

With intuitive drop-down menus and fill-in-the-blank tables, new users can quickly navigate through the software.

Figure 1: MON2020 interface

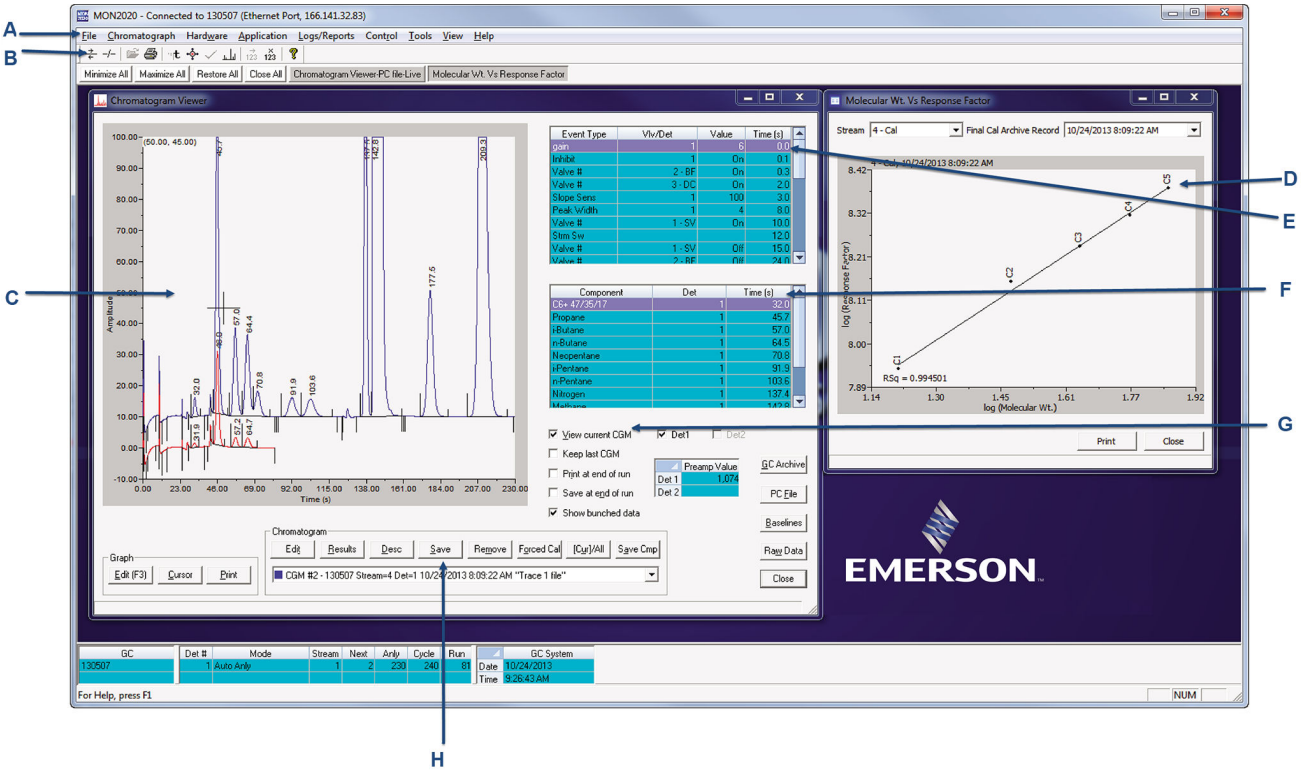

A. Simple drop-down menus
B. Connect to any GC with a mouse click
C. Full featured chromatogram display
*D. **Response Factor** fidelity chart*
*E. Fully detailed **Timed Events** table*
F. Automatic listing of measured components
G. Quickly add chromatograms to overlay; GC archive
H. Save chromatograms to hard drive

With its abilities to communicate with an enterprise network and export to numerous file types, MON2020 is a powerful tool ensuring operators, engineers, maintenance personnel, and management have access to critical data, such as current and archived chromatograms, alarm history, event logs, and maintenance logs.

The software's chromatogram viewer allows viewing and comparing both live and archived chromatograms simultaneously. Despite its small size, the chromatogram file includes analysis and calculation results, integration and valve time settings, retention time settings, and raw peak data.

The trend viewer makes it easy to trend multiple variables on a single chart. To help diagnose process or analysis issues, the trend viewer allows selection of single or multiple points; the chromatograms associated with the selected points will open in the chromatogram viewer. The trend files can be saved or exported as text, CSV, or Excel files.

MON2020 can connect to a GC via Ethernet directly or over a local or wide area network. The software is equipped with multi-level username and password security settings to limit and control access to the GC and provide levels of access authority ranging from read-only access to full control of the GC and its data.

Integration with third-party networks

Whether you want to network gas chromatographs (GCs) throughout your network or simply link a single GC to a flow computer, you can configure the Rosemount 770XA to handle almost any scenario.

- Choice of Ethernet, Modbus® Serial, or 4–20 mA analog outputs
- Use MON2020™ for diagnostics, configuration, and data retrieval over Ethernet, serial, or modem connections
- Use multi-dropped serial or Ethernet networks to connect multiple XA series GCs
- Able to connect to multiple personal computer (PC) workstations using Rosemount MON2020

The GC supports three types of communication interfaces:

- 10/100 Mbps Ethernet connectivity
- RS-232, RS-422, and RS-485 serial communication links
- 4–20 mA analog outputs

Ethernet connectivity

Two Ethernet interfaces are available on the GC. You can configure each interface with a static Internet protocol (IP) address, subnet mask, and gateway.

You can configure the RJ45 connector Ethernet port to operate as a DHCP host to simplify local PC access.

The Ethernet interfaces on the GC serve Rosemount MON2020 connections and Modbus TCP requests. The dual Ethernet interfaces can be used in many ways.

Examples:

- Connect one to a plant network for GC maintenance personnel and the other to a control network using Modbus TCP.
- Connect one to a broadband cellular wireless gateway for remote GC access, for data collection and maintenance, and the other for a local laptop connection.

OPC

With the optional GC-OPC server, the GC can connect via OPC with fully configurable definition files and remote operation control capabilities.

Modbus serial

The Modbus protocol is widely used today, because it is simple and effective. You can configure the GC to use the flow computer industry standard SIM-2251 Modbus map and make it compatible with communication links from legacy GC installations. You can also configure fully customized Modbus maps using either single register per floating point (ENRON format) or two registers per floating point format, used in DCS and PLC systems.

You can configure three hard-wired serial ports as RS-232, RS-485, or RS-422 links to communicate to host systems using the Modbus protocol. In addition, you can configure a fourth serial port for RS-232 with a nine-pin D-type connector that you can use for direct connection to an ultrasonic flow meter or local MON2020 access. The ultrasonic flow meter link enables the online calculation of the speed of sound for continuous validation of the custody measurement. If more serial links are required, you can add up to two additional serial ports using the two expansion ports using ROC800 series in/out (I/O) cards.

4-20 mA analog outputs

The GC supports six isolated 4-20 mA analog outputs that you can expand to fourteen analog outputs with optional expansion cards.

Environmental chamber testing title

Environmental chamber testing

Every Rosemount GC that leaves an Emerson facility undergoes rigorous testing throughout assembly. Emerson puts the majority of its systems into an 18-hour environmental chamber test, where the systems must operate to specification in an environment where the temperatures cycle between 0 °F to +130 °F (–18 °C to + 54 °C).

Figure 2: Environmental testing chamber



Specifications

Consult Emerson if necessary requirements are outside the specifications listed. Depending on the application, there may an availability for improved performance, other products, and material offerings.

Construction

Hazardous area certified for:

Environmental temperature	-4 °F to +140 °F (-20 °C to +60 °C)
Enclosure protection rating	IP66
Dimensions	Wall mount: Height x width x depth = 28 x 17.5 x 19.6–in. (711 x 445 x 498 mm) Pipe mount: Height x width x depth = 28 x 17.5 x 26.4–in. (711 x 445 x 671 mm) Floor mount: Height x width x depth = 60.3 x 17.5 x 24.1–in. (1532 x 445 x 612 mm)
Corrosion protection	Gas chromatograph (GC) enclosure material: Copper-free aluminum coated with industrial grade powder coat suitable for high humidity and salt-laden environments Process wetted materials: stainless steel. Where the function of an item excludes the use of stainless steel (e.g. glass rotameter tubes), corrosion-resistant materials are used. Electronics: All electronic circuit boards are covered with a clear, conformal coating.
Mounting	Floor-standing (standard), wall, or pipe-mount (optional)
Approximate weight (without sample system)	50 kg

Certifications and approvals

The Rosemount 770XA has the following certifications and approvals.

Refer to the Rosemount 770XA product page for product certificates and approvals.

Follow all safety markings on the analyzer.

Type	Specifications
Environment	Operating temperature ■ Thermal conductivity detector (TCD): -4 °F (-20 °C) to 140 °F (60 °C) ■ Flame ionization detector (FID): 40 °F (4 °C) to 130 °F (54 °C) ■ Micro flame photometric detector (µFPD): 32 °F (0 °C) to 122 °F (50 °C) ■ Hazardous area certified: -4 °F (-20 °C) to 140 °F (60 °C) ■ 0 to 95% relative humidity (non-condensing) ■ Indoor/outdoor ■ Pollution - degree 2 (The gas chromatograph can withstand some non conductive environmental pollutants, such as humidity.) ■ Vibration: Conforms to ASTM D4169

Type	Specifications
Hazardous area certifications (hardware dependent)	 USA and Canada ■ Class I, Zone 1, Ex/AEx db IIC, Gb T6/T4/T3 ■ Class I, Division 1, Groups B, C, and D, IP66 EU ATEX and IECEx ■ Ex db IIC Gb T6/T4/T3 ■ Ta = -4 °F (-20 °C) to 140 °F (60 °C) ■ SIRA 08ATEX 1328X ■ IECEx SIR 08.0093X Consult factory for additional product certifications available.

Table 2: Approval temperature ratings

T6	Basic system, no alternative options included
T5	Liquid sample injection valve (LSIV) option included
T4	Heat trace option with a maximum 176 °F (80 °C) temperature switch set point
T3	Heat trace option with a maximum 230 °F (110 °C) temperature switch set point

Performance capabilities

Oven	Airless, maximum 248 °F (120 °C)
Valves	Six-port and ten-port diaphragm chromatograph valves. Other types of valves, such as liquid injection or rotary valves, may be used depending on the application.
Carrier gas	Application-dependent. Typically zero-grade helium, nitrogen, or hydrogen.
Sample and calibration gas input pressure range	3 psig (0 barg) to 30 psig (2 barg) 15 psig (1 barg) recommended
Gas input pressures (maximums)	Sample gas: 90 psig (6 barg) Carrier gas: 90 psig (6 barg) Actuation gas: 110 psig (8 barg)
Detectors	Thermal conductivity detector (TCD) Flame ionization detector (FID) Micro flame photometric detector (µFPD) Available in multiple configurations
Streams	Up to 20 externally controlled streams or up to 8 internal (includes calibration stream)
Gating options	Fixed-time, slope sensing gating of peaks
Chromatograms stored/archived internally	Stores over 80 days of analysis report data and up to 2,500 individual chromatograms

Electronics

Power range Startup up to 250W. Normal operation up to 125W.

Standard communication methods

- Ethernet: Two available connections: one RJ-45 port and one 4-wire terminal with 10/100 Mbps
- Analog inputs: One standard input filtered with transient protection, 4-20 mA (user scalable and assignable)
- Analog outputs: Two isolated outputs, 4-20 mA
- Digital inputs: One input, user assignable, optically isolated, rated to 30 Vdc at 0.5 A
- Digital outputs: One user-assignable output, Form C and electro-mechanically isolated, 24 Vdc
- Serial: Two termination blocks, configurable as RS-232 or RS-485
- Ethernet: Two available connections: one RJ-45 port and one 4-wire terminal with 10/100 Mbps
- Analog inputs: Two standard inputs filtered with transient protection, 4-20 mA (user scalable and assignable)
- Analog outputs: Six self-powered isolated outputs, 4-20 mA
- Digital inputs: Five inputs, user assignable, optically isolated, rated to 30 Vdc at 0.5 A
- Digital outputs: Five user-assignable outputs, Form C and electro-mechanically isolated, 24 Vdc
- Serial: Three termination blocks, configurable as RS-232, RS-422, or RS-485 and one RS-232 D-sub (9-pin) Modbus®/ personal computer (PC) connection

Optional additional communication methods

Two expansion slots available for additional communication options.

Each slot has the capacity to add one of the following:

- Four analog inputs (isolated) card
- Four analog outputs (isolated) card
- Eight digital inputs (isolated) card
- Five digital outputs (isolated) card
- One RS-232, RS-422, or RS-485 serial connection card

Software

Type	Specification
Software	Windows®-based Rosemount MON2020
Firmware	Embedded firmware
Methods	8 ***Timed Event*** tables and 8 ***Component Data*** tables
Analysis clocks	Multiple analysis clock configurations
Peak integration	Fixed time or auto slope and peak identification Update retention time upon calibration or during analysis
Cyber security	Encrypted SSL communication between gas chromatograph (GC) and MON2020

Archived data storage capabilities

Type of record	Number of records	Remarks
Analysis results	31,744	88 days with 4-minute cycle time
Final calibration results	370	1 year
Calibration results	100	N/A
Final validation results	370	1 year
Validation results	100	N/A
Analysis chromatograms	8,515(1)	Approximately 22.5 days assuming running 4-minute analysis and 1 analysis clock
Final calibration chromatograms	370	1 year(2)
Final validation chromatograms	370	1 year(2)
Protected chromatograms	100	User-selectable
Hourly averages(3)	250(1)	Approximately 9 days, assuming 4-minute cycle time
Daily averages	365	1 year
Weekly averages	58	1 year
Monthly averages	12	1 year
Variable averages	250(1)	N/A
Every run (up to 250 variables)	250(1)	N/A
Alarm logs	1000	N/A
Event logs	1000	N/A

(1) *Changed from 2.0.x release.*
(2) *The gas chromatograph (GC) can store final calibration and validation chromatograms for a year, provided that no more than one calibration/validation is run per day and the cycle time is less than 15 minutes. If the cycle time exceeds 15 minutes, the oldest final calibration/validation chromatograms are deleted to make room for newer ones.*
(3) *You can have a total of 256 averages, including hourly, 24-hour, weekly, monthly, variable, and every run averages.*

Recommended installation

Figure 3 and Figure 4 represent the minimum recommended installation guidelines for the Rosemount 770XA Gas Chromatograph. Please consult Emerson for detailed installation recommendation of your application.

Dimensions are in inches (mm).

Floor mount details

Figure 3: Floor mount side and front views

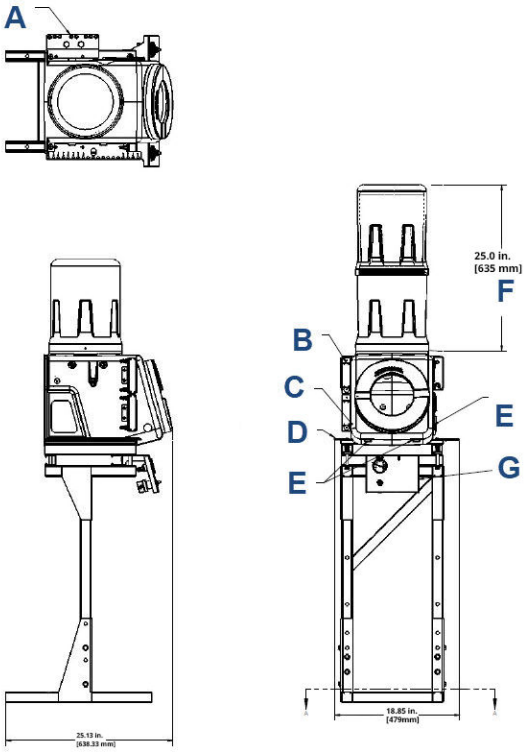

A. Carrier input plate 0.375-in. tube connections
B. Optional sample flow rate indicators
C. Field interconnect (power)(1)
D. Sample in and out bulkhead connection plate 0.375-in. tube
E. Field interconnect(1)
F. Removal clearance typical
G. Regulator panel varies with application (one to five regulators).

(1) Field interconnect entries of in/out (Ethernet, flow switch) wiring are M32 for ATEX and ¾-in for CSA.

Pole and wall mount details

Figure 4: Pole mount side vies and wall mount side and front views

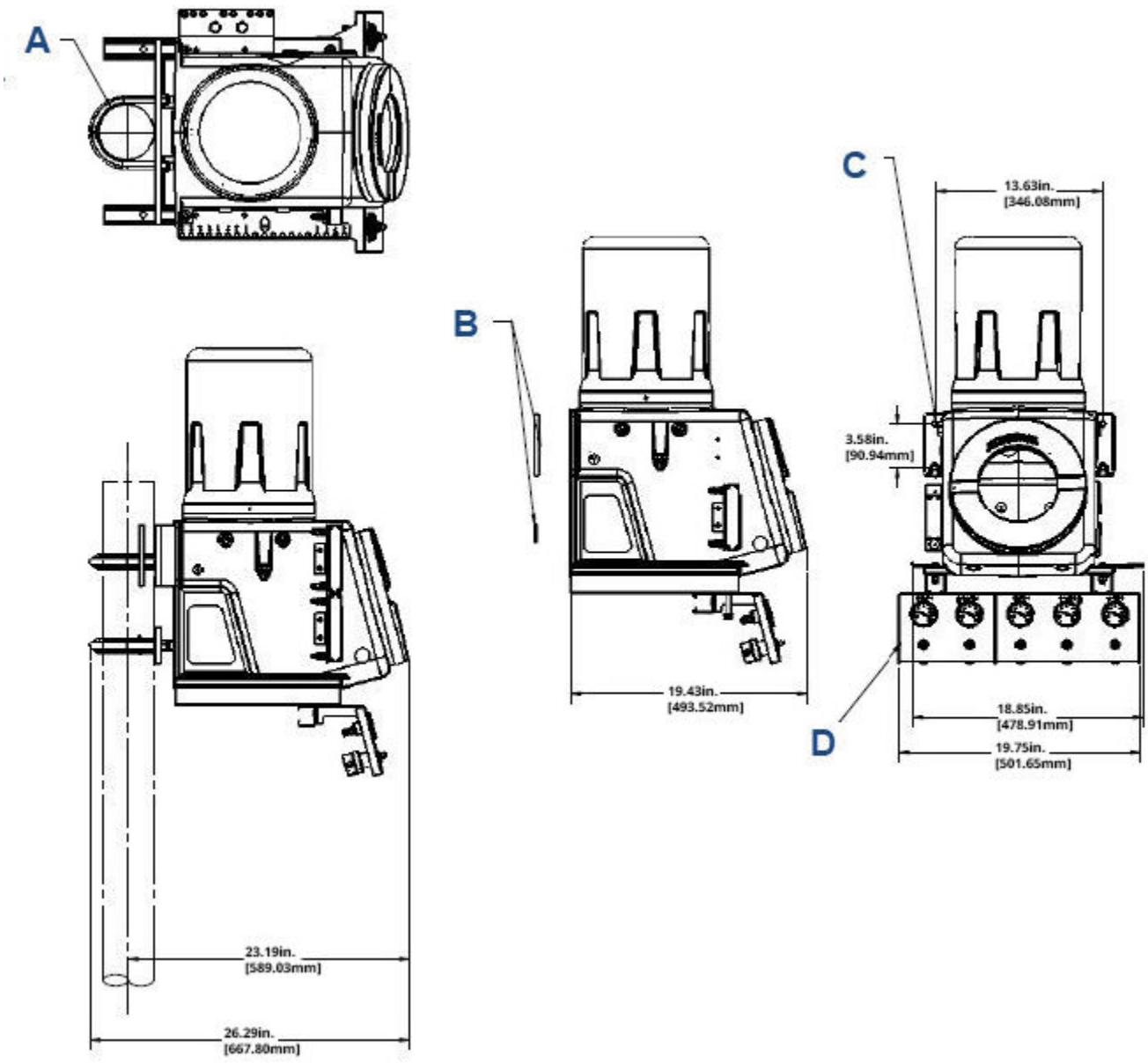

A. 4-in. pole mount option
B. Wall mounting kit
C. 0.5-in. thru mounting holes
D. Regulator panel varies with application (one to five regulators).

MS-00813-0100-0770
Rev. AB
November 2025

For more information: **Emerson.com/global**

©2025 Emerson. All rights reserved.

Emerson Terms and Conditions of Sale are available upon request. The Emerson logo is a trademark and service mark of Emerson Electric Co. Rosemount is a mark of one of the Emerson family of companies. All other marks are the property of their respective owners.

ROSEMOUNT™

EMERSON™