Product Data Sheet
00813-0200-4591, Rev BC
July 2025

Rosemount™ 2051HT Hygienic Pressure Transmitter

- Hygienic design conforms to 3-A® and EHEDG standards
- Reference accuracy up to 0.1%
- Rated for SIP/CIP process temperatures up to 302 °F (150 °C)
- Rangeability of 50:1
- Up to two year stability
- 4–20 mA/HART®, PROFIBUS® PA or FOUNDATION™ Fieldbus output and AMS Suite: Intelligent Device Manager compatibility ensures easier configurations, calibrations, and operation
- Proven technology from Emerson improves process reliability and robustness

ROSEMOUNT™

EMERSON™

Features and benefits

A foundation of reliable pressure measurement for the Life Science and Food and Beverage industries

Work more efficiently with the Rosemount 2051HT Hygienic Pressure Transmitter, an industry standard device that delivers reliable process data and consistent batch results.

Hygienic design conforms to hygienic standards

The hygienic design of the Rosemount 2051HT features 32 µ-in. Ra mechanically polished wetted surfaces. The stainless steel (SST) design is free of voids and crevices to ensure easy cleaning and wipe downs. The Rosemount 2051HT is also 3-A and EHEDG approved.

Proven Emerson technology improves process reliability and robustness

The Rosemount 2051HT uses the same proven sensor and electronics technology found in other industry leading Rosemount transmitters from Emerson. This ensures the transmitter to be robust and reliable, which improves your process consistency and increases your plant availability

4–20 mA/HART, PROFIBUS, or FOUNDATION Fieldbus output and AMS Suite compatibility ensures easier configurations, calibrations and operation

Lower maintenance costs with AMS Suite software, improve device performance and enable easier configuration and setup.

Combining AMS Suite with the Rosemount 2051HT can also provide you with audit trail information to make FDA compliance simpler and paper free.

Easy to use local configuration capabilities

The optional Local Operator Interface (LOI) features straightforward menus and built-in configuration buttons so you can commission without complicated training or additional tools.

Contents

Features and benefits 2
Rosemount 2051HT Hygienic Pressure Transmitter ordering information 4
Specifications 9
Product certifications 18
Dimensional drawings 19
Options 24

Access information when you need it with asset tags

Newly shipped devices include a unique QR code asset tag that enables you to access serialized information directly from the device. With this capability, you can:

- Access device drawings, diagrams, technical documentation, and troubleshooting information in your MyEmerson account.
- Improve mean time to repair and maintain efficiency.
- Ensure confidence that you have located the correct device.
- Eliminate the time-consuming process of locating and transcribing nameplates to view asset information.

Rosemount 2051HT Hygienic Pressure Transmitter ordering information

- 4-20 mA HART®, FOUNDATION Fieldbus
- Measurement Range Up to 300 psig (20,7 bar) Gage, Up to 150 psia (10,3 bar) Absolute
- Process Wetted Material 316L SST mechanically polished and electropolished to Ra < 15 µ-in. (0.38 µ-m)
- Basic Diagnostics, Loop Integrity
- 3A, EHEDG, ASME-BPE, see full specs for complete list of certifications

CONFIGURE > | VIEW PRODUCT >

Online product configurator

Many products are configurable online using our product configurator.

Select the **Configure** button or visit Emerson.com/global to start. With this tool's built-in logic and continuous validation, you can configure your products more quickly and accurately.

Specifications and options

The purchaser of the equipment must specify and select the product materials, options, and components.

Sizing and Selection Body

All Rosemount flow meters can be sized to meet your application specific requirements in the DP Flow sizing and selection tool. This tool will verify if a selected product meets your application requirements, provide a comparison between different primary elements, and generate a detailed accuracy comparison graph.

Once a sizing is completed, the configuration tool will help create a complete and valid model code to match your requirements and include any additional options or approvals.

Optimizing lead time

The starred offerings (★) represent the most common options and should be selected for the fastest delivery times. The non-starred offerings are subject to additional delivery lead time.

Required model components

Rosemount model

Code	Description	
2051HT	Hygienic Pressure Transmitter	★

Pressure type

Code	Description	
G	Gage	★
A	Absolute	★

Performance class

Code	Range 1–3	Range 0	
B	0.10 % span accuracy and 2-year stability	0.10 % span accuracy and 6 month stability	★
C	0.20 % span accuracy and 1-year stability	0.20 % span accuracy and 6 month stability	★

Pressure range

Code	Rosemount 2051HTG(1)	Rosemount 2051HTA	
0	–5 to 5 psi (–0.34 to 0.34 bar-g)	N/A	★
1	–14.7 to 30 psi (–1.01 to 2.1 bar- g)	0 to 30 psia (0 to 2.1 bar-a)	★
2	–14.7 to 150 psi (–1.01 to 10.3bar-g)	0 to 150 psia (0 to 10.3 bar-a)	★
3	–14.7 to 800 psi (–1.01 to 55.2bar-g)	N/A	★

(1) *Rosemount 2051HTG lower range limit varies with atmospheric pressure.*

Transmitter output

Code	Description	
A	4–20 mA with digital signal based on HART Protocol	★
F	FOUNDATION Fieldbus Protocol	★
W	PROFIBUS PA Protocol	

Sensor fill fluid

Code	Description	
3	Neobee® M-20	★

Housing material

Housing material option 1 comes with polycarbonate cover standard. Housing material option 2 comes with aluminum and glass cover standard.

Code	Description	
1	Crevice-free polished 316 SST	★

Code	Description	
2	Aluminum	★

Conduit entry size

Code	Description	
A	½–14 NPT	★
B	M20 x 1.5	★

Process connection style

All process wetted parts have surface finish of Ra < 32 µ-in (0.81 µ-m) standard unless otherwise specified.

Code	Type	Size	Diaphragm	Upper housing/extension	
T32	Tri-Clamp®	1½-in.	316L stainless steel (SST)	316L SST	★
T42	Tri-Clamp	2-in.	316L SST	316L SST	★
D32	DIN 11851 with coupling nut	DN40	316L SST	316L SST	★
D42	DIN 11851 with coupling nut	DN50	316L SST	316L SST	★
V22	Varivent Type F	DN25	316L SST	316L SST	★
V32	Varivent Type N	DN40	316L SST	316L SST	★
B11	Assemble to one Rosemount 1199 Diaphragm Seal with Rosemount DP Level Transmitters and 1199 Diaphragm Seal Systems PDS.				★

Additional options

Extended product warranty

Code	Description	
WR3	3-year limited warranty	★
WR5	5-year limited warranty	★

Plantweb™ control functionality

Code	Description	
A01	FOUNDATION™ Fieldbus advanced control function block suite	★

Product certificates

Code	Description	
I1	ATEX intrinsic safety	★
I5	USA intrinsic safety and non incendive	★
I6	Canada intrinsic safety	★
I7	IECEx intrinsic safety	★
IP	Republic of Korea Intrinsic Safety	★

Display and interface options

Code	Description	
M4[(1)]	LCD display with LOI	★
M5	LCD display	★

(1) *Only available with HART 4—20mA output (code A) and PROFIBUS PA (code W).*

Configuration buttons

Only available with HART® 4-20 mA output (code A).

Code	Description	
D1[(1)]	Quick Service buttons	★
D4	Analog zero and span	★
DZ	Digital zero trim	★

(1) *Only available with Graphical LCD (code M6) and housing material code 2.*

Transient terminal block

Code	Description	
T1	Transient protection terminal block	★

Software configuration

Only available with HART® 4-20 mA output (code A).

Code	Description	
C1	Custom software configuration	★

Alarm levels

Only available with 4-20 mA HART® output (Code A).

Code	Description	
C4	NAMUR alarm and saturation levels, high alarm	★
CN	NAMUR alarm and saturation levels, low alarm	★
CR	Custom alarm and saturation signal levels, high alarm (requires C1 and Configuration Data Sheet)	★
C7	Custom alarm and saturation signal levels, low alarm (requires C1 and Configuration Data Sheet)	★
CT	Low alarm (standard Rosemount alarm and saturation levels)	★

Special cleaning

Code	Description	
P2	Cleaning for special services	
P3	Cleaning for <1 PPM chlorine/fluorine	

Wetted surface finish certification

Code	Description	
Q16	Surface finish certification	★

Calibration certification

Code	Description	
Q4	Calibration certificate	★
QP	Calibration certificate and tamper evident seal	★

Material traceability certification

Code	Description	
Q8	Material traceability certification per EN 10204 2.1B	★

Positive material identification (PMI)

Code	Description	
Q76	PMI verification and certificate	★

Certificate of compliance to 3-A

Code	Description	
QA	Certificate of compliance to 3-A	★

Certificate of compliance to EHEDG

Code	Description	
QE	Certification of compliance to EHEDG	★

Conduit electrical connector

Code	Description	
GE	M12, 4-pin, male connector (eurofast®)	★
GM	A size mini, 4-pin, male connector (minifast®)	★

Increased ingress protection

Code	Description	
V9	Transmitter IP69K Rating (Stainless Steel [SST] only)	★

Specifications

Performance specifications

For zero-based spans, reference conditions, Neobee® M-20 oil fill, SST materials, 1 ½-in. Tri Clamp process connections, silicone gasket material, clamping torque of 45 in-lb, digital trim values set to equal range points.

For assemblies attached to a Rosemount 1199 Diaphragm Seal (option code B11), use Instrument Toolkit™ or the QZ option to quantify the total performance of the assembly under operating conditions.

Note
QZ option is to be added to the Rosemount 1199 model string.

Table 1: Reference Accuracy

Stated reference accuracy equations include terminal based linearity, hysteresis, and repeatability.

Range	Performance class option B	Performance class option C
0	±0.10% of span For spans less than 5:1, accuracy = $\pm\left(0.02\left[\frac{URL}{Span}\right]+0.01\right)\%\text{ of span}$	±0.20% of span For spans less than 5:1, $\pm\left(0.075+0.025\left[\frac{URL}{Span}\right]\right)\%\text{ of span}$
1	±0.10% of span For spans less than 5:1, accuracy = $\pm\left(0.013\left[\frac{URL}{Span}\right]+0.035\right)\%\text{ of span}$	±0.20% of span For spans less than 5:1, $\pm\left[0.135+0.013\left(\frac{URL}{Span}\right)\right]\%\text{ of span}$
2	±0.10% of span For spans less than 10:1, accuracy = $\pm\left(0.012\left[\frac{URL}{Span}\right]\right)\%\text{ of span}$	±0.20% of span For spans less than 10:1, $\pm\left[0.08+0.012\left(\frac{URL}{Span}\right)\right]\%\text{ of span}$
3	±0.10% of span For spans less than 10:1, accuracy = $\pm\left(0.025\left[\frac{URL}{Span}\right]+0.08\right)\%\text{ of span}$	±0.20% of span For spans less than 10:1, $\pm\left[0.15+0.025\left(\frac{URL}{Span}\right)\right]\%\text{ of span}$

Table 2: Long Term Stability

±50 °F (28 °C) temperature changes, and up to 300 psi (20.68 bar) line pressure

Range	Performance class option B	Performance class option C
0	±0.3% of URL for 1 year	±0.2% of URL for 6 months
1–2	±0.15% of URL for 2 years	±0.15% of URL for 1 year
3	±0.2% of URL for 2 years	±0.2% of URL for 1 year

Table 3: Dynamic Performance

	4–20 mA HART Protocol[1]	FOUNDATION Fieldbus and PROFIBUS PA Protocols [2]	Typical HART transmitter response time
Total response time (T_d +T_c)[3]:			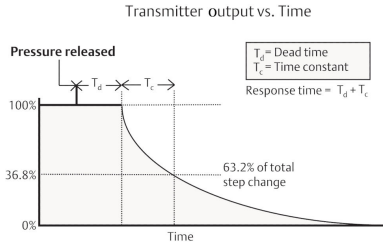
Ranges 0–3	145 ms	197 ms	
Dead time (T_d)	60 ms (nominal)	112 ms	
Update rate	22 times per second	22 times per second (FOUNDATION Fieldbus) 20 times per second (PROFIBUS)	

(1) *Dead time and update rate apply to all models and ranges; analog output only.*
(2) *Transducer Block response time, Analog Input block execution time not included.*
(3) *Nominal total response time at 75 °F (24 °C) reference conditions.*

Table 4: Ambient Temperature Effect Per 50 °F (28 °C)

Range	Ambient temperature effect
0	±(0.70% URL + 0.30% span)
1	±(0.35% URL + 0.20% span)
2	±(0.10% URL + 0.075% span)
3	±(0.10% URL + 0.075% span)

For assemblies attached to a Rosemount 1199 Diaphragm Seal (option code B11) see Instrument Toolkit.

Mounting position effects

Zero shifts to ±2.5 inH_2O (6.22 mbar), which can be calibrated out. No span effect.

Vibration effect

Less than ±0.1% of URL when tested per the requirements of IEC 60770 control room level.

Electromagnetic compatibility (EMC)

Note
During surge event, device with 4-20 mA (Transmitter output option code A) may exceed maximum EMC deviation limit or reset; however, device will self-recover and return to normal operation within specified start-up time.

Note
During ESD event, device with FOUNDATION Fieldbus or PROFIBUS (Transmitter output option code F or W) may exceed maximum EMC deviation limit, however, device will self-recover and return to normal operation within specified start-up time.

Transient protection (option code T1)

Tested in accordance with IEEE C62.41.2-2002, location category B.

6 kV crest (0.5 µs–100 kHz)

3 kA crest (8 x 20 µs)

6 kV crest (1.2 x 50 µs)

Functional specifications

Table 5: Range and Sensor Limits

Range	Minimum span	URL	LRL	
			2051HTA	2051HTG[1]
0	0.50 psi (0.034 bar)	5.00 psi (0.34 bar)	N/A	–5.00 psig (–0.34 bar)
1	1.00 psi (0.069 bar)	30.00 psi (2.07 bar)	0 psia (0 bar)	–14.70 psig (–1.01 bar)
2	1.50 psi (0.10 bar)	150.00 psi (10.34 bar)		
3	8.00 psi (0.55 bar)	800.00 psi (55.16 bar)	N/A	

(1) *Assumes atmospheric pressure of 14.70 psia (1.01 bar-a).*

Service

Liquid, gas, and vapor applications

4–20 mA HART® (output code A)

Power supply

External power supply required. Standard transmitter (4–20 mA) operates on 10.5–42.4 Vdc with no load.

Load limitations

Maximum loop resistance is determined by the voltage level of the external power supply described by:

Max. loop resistance = 43.5 (power supply voltage: 10.5)

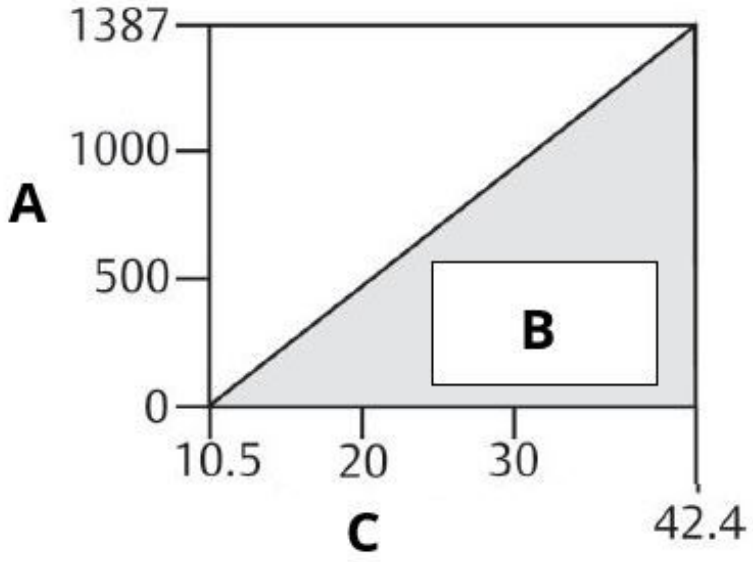

A. Load (Ωs)
B. Operating region
C. Voltage (Vdc)

Note
Communication requires a minimum loop resistance of 250 ohms.

Note
For CSA approval, power supply must not exceed 42.4 V.

Indication

Optional two-line Local Operator Interface (LOI)/LCD display

Optional configuration buttons

Configuration buttons need to be specified:

- **Digital zero trim** (option code DZ) changes digital value of the transmitter and is used for performing a sensor zero trim.
- **Analog zero span** (option code D4) changes analog value and can be used to rerange the transmitter with an applied pressure.

Output

Two-wire 4–20 mA, user selectable for linear or square root output. Digital process variable superimposed on 4–20 mA signal, available to any host that conforms to HART Protocol.

The Rosemount 2051 comes with Selectable HART Revisions. Digital communications based on HART Revision 5 (default) or Revision 7 (option code HR7) protocol can be selected. The HART revision can be switched in the field using any HART based configuration tool or the optional local operator interface (M4).

Local Operator Interface (LOI)

The LOI utilizes a two-button menu with internal and external/terminal side configuration buttons. Internal buttons are always configured for LOI. External buttons can be configured for either LOI (option code M4), Analog zero and span (option code D4) or digital zero trim (option code DZ). See Rosemount 2051 Reference Manual for LOI configuration menu.

FOUNDATION™ Fieldbus (output code F)

Power supply

External power supply required; transmitters operate on 9.0 to 32.0 Vdc transmitter terminal voltage.

Current draw

17.5 mA for all configurations (including LCD display option)

Indication

Optional two-line LCD display

FOUNDATION Fieldbus block execution times

Block	Execution time
Resource	N/A
Sensor and SPM Transducer	N/A
LCD Display	N/A
Analog Input 1, 2	20 milliseconds
PID	25 milliseconds
Input Selector	20 milliseconds
Arithmetic	20 milliseconds
Signal Characterizer	20 milliseconds
Integrator	20 milliseconds
Output Splitter	20 milliseconds
Control Selector	20 milliseconds

FOUNDATION Fieldbus parameters

Links	25 (maximum)
Virtual Communications Relationships (VCR)	20 (maximum)

FOUNDATION™ Fieldbus function blocks (option A01)

Resource block

The resource block contains diagnostic, hardware, and electronics information. There are no linkable inputs or outputs to the resource block.

Sensor transducer block

The sensor transducer block contains sensor information and the ability to calibrate the pressure sensor or recall factory calibration.

LCD transducer block

The LCD transducer block is used to configure the LCD display meter.

Analog input (AI) block

The analog input function block processes the measurements from the sensor and makes them available to other function blocks. The output value from the AI block is in engineering units and contains a status indicating the quality of the measurement. The AI block is widely used for scaling functionality.

Input selector (ISEL) block

The Input Selector Function Block can be used to select the first good, Hot Backup™, maximum, minimum, or average of as many as eight input values and place it at the output. The block supports signal status propagation.

Integrator (INT) block

The Integrator Function Block integrates one or two variables over time. The block compares the integrated or accumulated value to pre-trip and trip limits and generates discrete output signals when the limits are reached.

The INT function block is used as a totalizer. This block will accept up to two inputs, has six options how to totalize the inputs, and two trip outputs.

Arithmetic (ARTH) block

The Arithmetic Function Block provides the ability to configure a range extension function for a primary input. It can also be used to compute nine different arithmetic functions including flow with partial density compensation, electronic remote seals, hydrostatic tank gauging, ratio control, and others.

Signal characterizer (SGCR) block

The Signal Characterizer Function Block characterizes or approximates any function that defines an input/output relationship. The function is defined by configuring as many as twenty X,Y coordinates. The block interpolates an output value for a given input value using the curve defined by the configured coordinates. Two separate analog input signals can be processed simultaneously to give two corresponding separate output values using the same defined curve.

Proportional/Integral/Derivative (PID) block

The PID Function Block combines all of the necessary logic to perform PID control. The block supports mode control, signal scaling, and limiting, feed forward control, override tracking, alarm limit detection, and signal status propagation.

Control selector block

The Control Selector Function Block selects one of two or three inputs to be the output. The inputs are normally connected to the outputs of PID or other function blocks. One of the inputs would be considered normal and the other two overrides.

Output splitter block

The Output Splitter Function Block provides the capability to drive two control outputs from a single input. It takes the output of one PID or other control block to control two valves or other actuators.

Backup link active scheduler (LAS)

The transmitter can function as a link active scheduler if the current link master device fails or is removed from the segment.

PROFIBUS PA Protocol (output code W)

Profile version

3.02

Power supply

External power supply required; transmitters operate on 9.0 to 32.0 Vdc transmitter terminal voltage.

Current draw

17.5 mA for all configurations (including LCD display option)

Output update rate

50 times per second

Standard function blocks

Analog input (AI block)

The AI function block processes the measurements and makes them available to the host device. The output value from the AI block is in engineering units and contains a status indicating the quality of the measurement.

Physical block

The physical block defines the physical resources of the device including type of memory, hardware, electronics, and diagnostic information.

Transducer block

Contains actual sensor measurement data including the sensor diagnostics and the ability to trim the pressure sensor or recall factory defaults.

Sensor overpressure limits

- Range 0: 60 psi (4.14 bar)
- Range 1: 150 psi (10.34 bar)
- Range 2: 300 psi (20.68 bar)
- Range 3: 1600 psi (110.32 bar)

Note
Overpressure limit is dependent on the clamp/pressure adapter or sensor rating (whichever is lower).

Sensor burst pressure

All ranges: 2400 psi (165.47 bar)

Note
Burst pressure limit is dependent on the clamp/pressure adapter or sensor rating (whichever is lower).

Temperature limits

Ambient

+5 °F (-15 °C) to +185 °F (+85 °C)

+175 °F with LCD display

Storage

-4 °F (-20 °C) to +230 °F (+110 °C)

Process temperature limits

+5 °F (-15 °C) to +302 °F (+150 °C)[1]

Process temperatures above +185 °F (+85 °C) require lowering the ambient limits by a 1.5:1 ratio:

Maximum ambient temperature in °F = 185 — $\frac{(\text{ProcessTemp} - 185)}{1.5}$

Maximum ambient temperature in °C = 85 — $\frac{(\text{ProcessTemp} - 85)}{1.5}$

For assemblies attached to a Rosemount 1199 Diaphragm Seal (option code B11), see Rosemount DP Level Transmitters and 1199 Diaphragm Seal Systems Product Data Sheet for process temperature limits.

(1) For Option codes T32, T42: +212 °F (+100 °C) limit for pressure below 3.9 psia bar. For Option codes D32, D42, V22, V32: +73 °F (+23 °C) limit for pressures below 3.9 psia bar; +140 °F (+60 °C) limit for pressures from 3.9 psia to 6 psia bar.

Turn-on time

Performance within specifications less than two seconds (seven seconds for PROFIBUS® PA and 20 seconds for FOUNDATION™ Fieldbus) after power is applied to the transmitter.

Damping

Failure mode alarm

Humidity limits

0–100 percent relative humidity

Physical specifications

Material selection

Emerson provides a variety of Rosemount products with various product options and configurations including materials of construction that can be expected to perform well in a wide range of applications. The Rosemount product information presented is intended as a guide for the purchaser to make an appropriate selection for the application.

It is the purchaser's sole responsibility to make a careful analysis of all process parameters (such as all chemical components, temperature, pressure, flow rate, abrasives, contaminants, etc.), when specifying product materials, options, and components for the particular application. Emerson is not in a position to evaluate or guarantee the compatibility of the process fluid or other process parameters with the product options, configuration, or materials of construction selected.

Process connections

- 1½-in. Tri-Clamp®
- 2-in. Tri-Clamp
- DIN 11851 DN40
- DIN 11851 DN50
- VARIVENT® Type F DN25
- VARIVENT Type N DN40

Process-wetted parts

Isolation diaphragm

316L stainless steel (SST)

Process connector

316L SST

Surface finish

R_a < 32 µ-in. (0.81 µ-m) mechanically polished (standard on all connections)

Transmissible Spongiform Encephalopathy (TSE) Declaration

Emerson certifies no process wetted components used in this product contain substances of animal origin. Materials used in the production or processing of wetted components for this product meet the requirements stated in EMA/410/01 Rev. 3 and ISO 22442-1:2015. Wetted components in this product are considered free of TSE.

Non-wetted parts

Electronics housing

316 stainless steel (SST) or low-copper aluminum

Enclosures meet NEMA® Type 4x, IP66, IP68, and IP69K when properly installed.

Note
IP69K rating only available on units with an SST housing and option code V9 in the model string.

Local Operator Interface (LOI) and LCD display covers

- Non-glass, polycarbonate LCD display cover with SST housing material (Option 1)
- Low-copper aluminum and glass LCD display cover with low-copper aluminum housing material (Option 2)

Sensor module fill fluid

Neobee® M-20 (FDA approved)

Shipping weight for Rosemount 2051HT

3.44 lb. (1.56 kg) with SST housing, LCD display with polycarbonate cover, and 1 ½-in. Tri Clamp connection

Product certifications

For product certification information, refer to Quick Start Guide: Rosemount™ 2051HT Hygienic Pressure Transmitter.

Dimensional drawings

Rosemount 2051HT

For assemblies attached to a Rosemount 1199 Diaphragm Seal (option code B11), see Rosemount 1199 Diaphragm Seal System Type 1 Drawings.

Figure 1: Rosemount 2051HT Pressure Transmitter with Aluminum Housing and Hygienic Clamp Connection

Shown with optional digital display

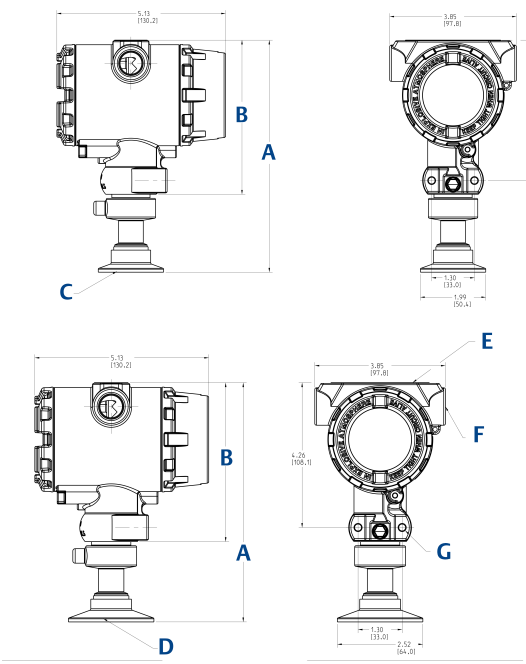

Shown without digital display

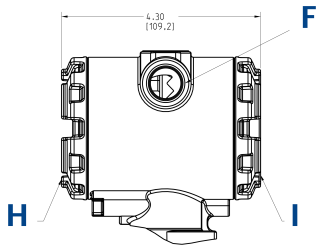

A. See table below
B. See table below
C. 1.5-in. hygienic clamp connection
D. 2-in hygienic clamp connection
E. Nameplate
F. Conduit connection (2 places)
G. Bracket mounting holes (¼-20 UNC)(2 places)
H. Field terminal
I. Transmitter electronics

Pressure range	DIM A (Aluminum)	DIM A (Stainless steel)	DIM B (Aluminum)	DIM B (Stainless Steel)
GP 0.1/AP 1.2	5.68 (144.3)	5.36 (136.1)	4.67 (118.6)	4.44 (112.8)
GP 2.3	7.01 (178)	6.75 (171.5)	4.67 (118.6)	4.44 (112.8)

Figure 2: Rosemount 2051HT Pressure Transmitter with SST Housing and Hygienic Clamp Connection

Shown with optional digital display **Shown without digital display**

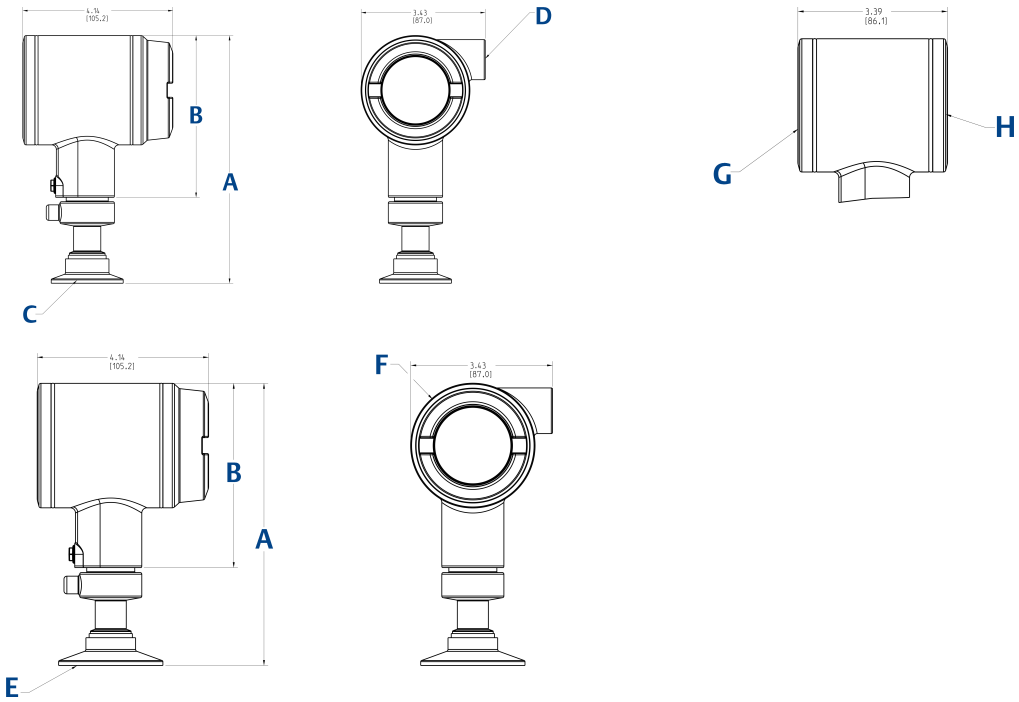

A. See table below
B. See table below
C. 1.5-in. hygienic clamp connection
D. Conduit connection
E. 2-in hygienic clamp connection
F. Nameplate and certification information
G. Field terminal
H. Transmitter electronics

Pressure range	DIM A (Aluminum)	DIM A (Stainless steel)	DIM B (Aluminum)	DIM B (Stainless Steel)
GP 0.1/AP 1.2	5.68 (144.3)	5.36 (136.1)	4.67 (118.6)	4.44 (112.8)
GP 2.3	7.01 (178)	6.75 (171.5)	4.67 (118.6)	4.44 (112.8)

Figure 3: Rosemount 2051HT Pressure Transmitter with Aluminum Housing and Hygienic Connection (DIN 11851 DN 40)

Shown with optional digital display **Shown without digital display**

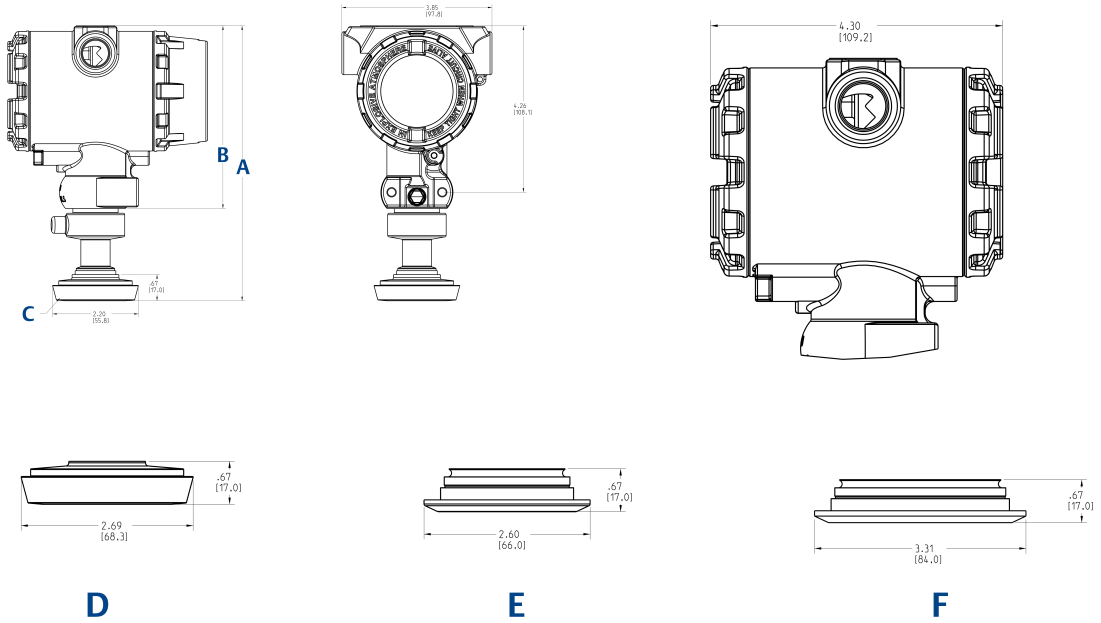

A. See table below
B. See table below
C. DIN 11851 DN 40 connection
D. DIN 11851 DN 50
E. Varivent F
F. Varivent N

Pressure range	DIM A (Aluminum)	DIM A (Stainless steel)	DIM B (Aluminum)	DIM B (Stainless Steel)
GP 0.1/AP 1.2	5.68 (144.3)	5.36 (136.1)	4.67 (118.6)	4.44 (112.8)
GP 2.3	7.01 (178)	6.75 (171.5)	4.67 (118.6)	4.44 (112.8)

Figure 4: Rosemount 2051HT Pressure Transmitter with SST Housing and Hygienic Clamp Connection (DIN 11851 DN 40)

Shown with optional digital display **Shown without digital display**

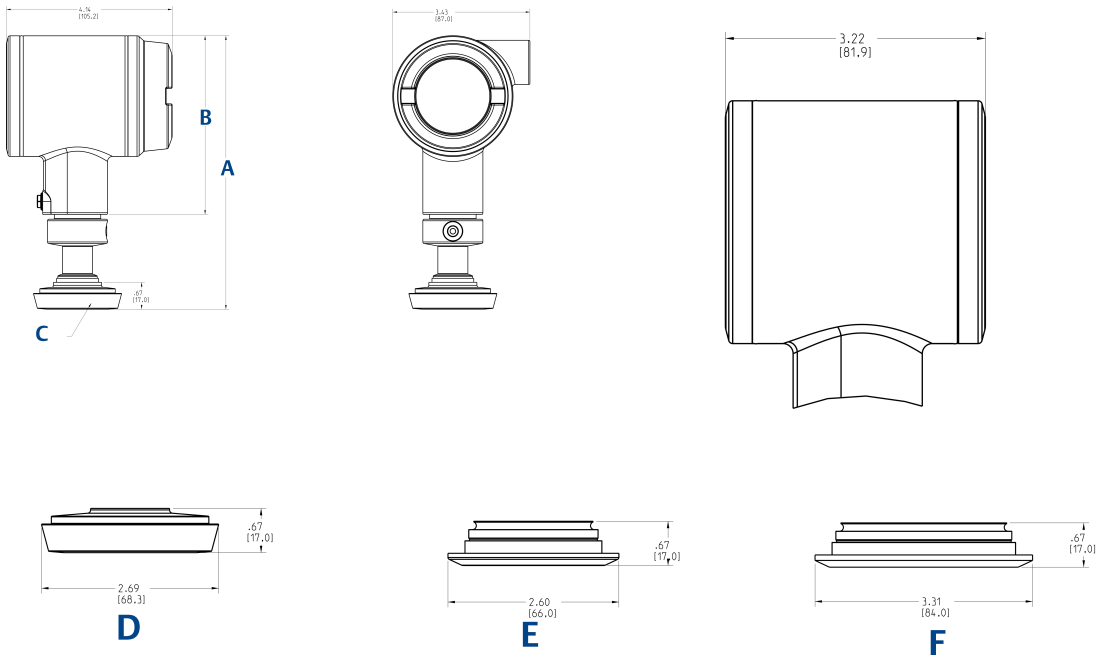

A. See table below
B. See table below
C. DIN 11851 DN 40 connection
D. DIN 11851 DN 50
E. Varivent F
F. Varivent N

Pressure range	DIM A (Aluminum)	DIM A (Stainless steel)	DIM B (Aluminum)	DIM B (Stainless Steel)
GP 0.1/AP 1.2	5.68 (144.3)	5.36 (136.1)	4.67 (118.6)	4.44 (112.8)
GP 2.3	7.01 (178)	6.75 (171.5)	4.67 (118.6)	4.44 (112.8)

Pipe mounting

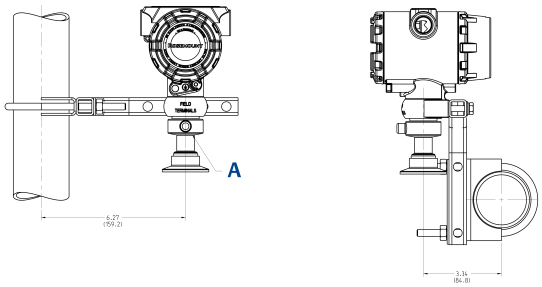

Panel mounting

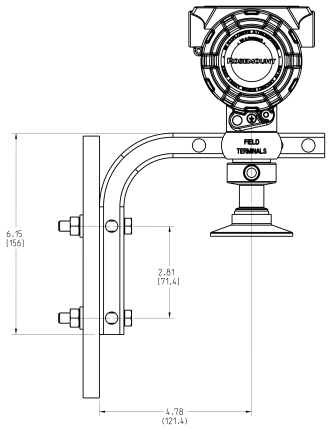

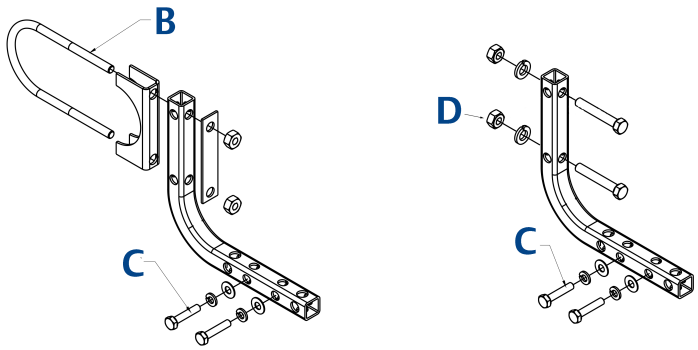

A. Hygienic clamp connection
B. 2-in. U-bolt for pipe mounting (clamp shown)
C. ¼-20 X 1.25 bolts for transmitter mounting
D. 5/16-20 X 1.25 bolts for panel mounting (not supplied)

Options

Standard configuration

Unless otherwise specified, transmitter is shipped as follows:

Engineering units	Psi (all ranges)
4 mA(1)	0 (engineering units)
20 mA(1)	Upper range limit
Output	Linear
LCD display	Installed or none
Alarm(1)	High
Software tag	N/A
Damping	0.4 seconds

(1) *Not applicable to FOUNDATION™ Fieldbus and PROFIBUS® PA Protocols.*

Custom configuration

Note
Only available with HART® 4–20 mA output (code A).

If option code C1 is ordered, the customer may specify the following data in addition to the standard configuration parameters.

- Output information
- Transmitter information
- LCD display configuration
- Hardware selectable information
- Signal selection
- Scaled variable
- and more

For Rosemount 2051HT with HART Protocol, refer to the Rosemount 2051 Configuration Data Sheet.

Tagging (two options available)

- Tag may be permanently stamped on transmitter nameplate upon request; 56 characters maximum.
- Tag may be stored in transmitter memory. Character limit is dependent on protocol.
  - HART® Revision 5: 8 characters
  - HART Revision 7: 32 characters
  - FOUNDATION™ Fieldbus: 32 characters
  - PROFIBUS® PA: 32 Characters

Commissioning tag

For FOUNDATION™ Fieldbus only: A temporary commissioning tag is placed in the transmitter box. The tag indicates the device ID and allows an area for writing the location.

Output information

Output range points must be the same unit of measure. Available units of measure for pressure include:

Pressure			
inH_2O (68 °F)	mbar	inH_2O (60 °F)(1)	ftH_2O (4 °C)
inHg (0 °C)	g/cm^2	cmH_2O (4 °C)	ftH_2O (60 °F)
ftH_2O (68 °F)	kg/cm^2	mH_2O (4 °C)	mHg (0 °C)
mmH_2O (68 °F)	Pa	cmHg (0 °C)	MPa(1)
mmHg (0 °C)	kPa	lb/ft^2	inH_2O (4 °C)
psi	Torr	hPa	mmH_2O (4 °C)
bar	atm	kg/m^2	psf (2)
Flow			
User-defined			
Totalizer – Flow Units of Time			
Seconds	Minutes	Hours	Days
Level			
Feet (ft)	Meters (m)	Inches (in)	Centimeters (cm)
Millimeters (mm)			
Volume			
Gallons	Liters	Imperial Gallons	Cubic Meters
Barrels	Cubic Yards	Cubic Feet	Cubic Inches

(1) *Not available with Low Power (output code M) or PROFIBUS® PA (output option code W).*
(2) *Not available with 4-20 mA HART® (output code A).*

Display and interface options

M4 Digital display with Local Operator Interface (LOI)

Available for 4–20 mA HART® and PROFIBUS® PA Protocols

M5 Digital display

- Two-line, 8-digit LCD display for 4–20 mA HART, FOUNDATION™ Fieldbus, and PROFIBUS® PA Protocols
- Direct reading of digital data for higher accuracy
- Displays user-defined flow, level, volume, or pressure units
- Displays diagnostic messages for local troubleshooting
- 90° rotation capability for easy viewing

Configuration buttons

Rosemount 2051 will ship with no buttons unless option D4 (analog zero and span), DZ (digital zero), or M4 (LOI) for local configuration buttons are specified. Only available with HART 4-20mA output (code A) and PROFIBUS PA (code W).

External or rear/terminal side

Table 6: Button Configuration

Option codes[1]	Internal	External or rear/ terminal side
DZ[2]	N/A	Digital zero trim
D4[1]		Analog zero and trim
M4	LOI	LOI[3]
M4 + DZ[3]		Digital zero trim
M4 + D4[3]		Analog zero and trim

(1) *Available with 4–20 mA HART and PROFIBUS PA Protocols. Housing material option 1 comes with rear/terminal-side buttons; housing material option 2 comes with external buttons.*
(2) *Not available for PROFIBUS.*
(3) *Not provided with housing material option 1.*

00813-0200-4591
Rev. BC
July 2025

For more information: **Emerson.com/global**

©2025 Emerson. All rights reserved.

Emerson Terms and Conditions of Sale are available upon request. The Emerson logo is a trademark and service mark of Emerson Electric Co. Rosemount is a mark of one of the Emerson family of companies. All other marks are the property of their respective owners.

ROSEMOUNT™

EMERSON™