Reference Manual
00809-0500-4728, Rev AE
August 2025

Rosemount™ 644 Rail Mount Temperature Transmitter

with RK Option and HART® 7 Protocol



ROSEMOUNT™

EMERSON™

Safety messages

NOTICE

Read this document before working with the product. For personal and system safety, and for optimum product performance, ensure all document contents and product information, procedures, and safety messages are thoroughly understood by anyone interacting with this product. For technical assistance, see Emerson.com/global.

⚠ WARNING

Follow instruction

Failure to follow these installation guidelines could result in death or serious injury.

Ensure only qualified personnel perform the installation.

Explosion

Explosions could result in death or serious injury.

- Do not remove the connection head cover in explosive atmospheres when the circuit is live.
- Before connecting a handheld communicator in an explosive atmosphere, ensure that the instruments in the loop are installed in accordance with intrinsically safe or non-incendive field wiring practices.
- Verify that the operating atmosphere of the transmitter is consistent with the appropriate hazardous locations certifications.
- All connection head covers must be fully engaged to meet explosion-proof requirements.

Process leaks

Process leaks could result in death or serious injury.

- Do not remove the thermowell while in operation.
- Before applying pressure, install and tighten thermowells and sensors.

Electric shock

Electrical shock could cause death or serious injury.

Use extreme caution when making contact with the leads and terminals.

The products described in this document are NOT designed for nuclear-qualified applications.

Using non-nuclear qualified products in applications that require nuclear-qualified hardware or products may cause inaccurate readings.

For information on Emerson nuclear-qualified products, contact your local Emerson Sales Representative.

Physical access

Unauthorized personnel may potentially cause significant damage to and/or misconfiguration of end users' equipment. This could be intentional or unintentional and needs to be protected against.

Physical security is an important part of any security program and fundamental in protecting the system. Restrict physical access by unauthorized personnel to protect end users' assets. This is true for all systems used within the facility.

Contents

Chapter 1 Introduction....5
1.2 Using this manual....5
1.3 Transmitter overview....5
1.4 Mounting, installation, and programming....5
1.5 Product recycling/disposal....6

Chapter 2 Installation....7
2.1 Safety messages....7
2.2 Connections....8
2.3 Multidrop mode....9

Chapter 3 Configuration....11
3.1 Safety messages....11
3.2 Configuration methods....11
3.3 Sensor error value configuration considerations....13

Chapter 4 Operation and Maintenance....15
4.1 Safety messages....15
4.2 LED functionality....15
4.3 Jumpers....16
4.4 Test pins....16
4.5 HART® commands....16

Chapter 5 Troubleshooting....19
5.1 Primary value out of limits....19
5.2 Non-primary variable out of limits....19
5.3 Loop current saturated....19
5.4 Primary sensor 1 error....19
5.5 Primary sensor 2 error (only if sensor 2 is enabled)....19
5.6 Dual input: Sensor Drift Alert....20
5.7 Hot Backup Active....20
5.8 Hot Backup Active....20
5.9 Configuration not supported by device....20
5.10 Electronic temperature out of limits....20
5.11 Power supply voltage issues....21
5.12 Attempting or failed to enter SIL mode....21
5.13 Electronics failure....21
5.14 Electronics failure....21
5.15 Power supply voltage issues....21
5.16 Loop current read back error....22
5.17 Power supply voltage issues....22
5.18 Electronics failure....22
5.19 Electronics failure....22
5.20 Electronics failure....22

5.21 Electronics failure....23
5.22 Watchdog reset executed....23
5.23 Internal RTD sensor error....23
5.24 Sensor failure....23
5.25 Sensor measurement error....23
5.26 Sensor measurement error....24
5.27 Sensor measurement error....24

Appendix A Reference Data....25
A.1 Product certifications....25
A.2 Ordering information, specifications, and drawings....25
A.3 Dimensional drawings....26

Appendix B Field Communicator Menu Tree....27

1 Introduction

1.2 Using this manual

This manual is designed to assist in the installation, operation, and maintenance of Rosemount 644R/T Rail Mount Temperature Transmitter.

- Installation
- Configuration
- Operation and maintenance
- Troubleshooting
- Reference data

1.3 Transmitter overview

The transmitter supports the following features:

- 4-20 mA/HART® protocol (Revision 7).
- Accepts either one or two inputs from a wide variety of sensor types (2-, 3-, and 4-wire RTD, thermocouple, mV and ohm)
- Optional Safety Certification (IEC 61508 SIL 2)
- Special dual-sensor features including Hot Backup™, Sensor Drift Alert, first good, differential and average temperature measurements, and four simultaneous measurement variable outputs in addition to the analog output signal
- Meets NAMUR NE21, NE43, NE44, NE89 and NE107 compliant diagnostics information.

Refer to the following literature for a full range of compatible connection heads, sensors, and thermowells provided by Emerson:

- Rosemount 214C Temperature Sensors Product Data Sheet
- Rosemount Volume 1 Temperature Sensors and Accessories (English) Product Data Sheet
- Rosemount DIN-Style Temperature Sensors and Thermowells (Metric) Product Data Sheet

Table 1-1: Change Summary: Rosemount 644 Rail Mount HART Device Revision

Release date	NAMUR software revision	NAMUR hardware revision	HART software revision(1)	Manual document number
May 2021	01.05.10	01.05.10	7	00809-0500-4728

(1) NAMUR software revision is located on the hardware tag of the device. HART software revision can be read using a HART communication tool.

1.4 Mounting, installation, and programming

- Communication via Asset Management tool (e.g. Pactware, AMS, HART® communicator) for which all relevant DD, eDD and DTM files are available.

1.5 Product recycling/disposal

Recycling of equipment and packaging should be taken into consideration and disposed of in accordance with local and national legislation/regulations.

2 Installation

2.1 Safety messages

Instructions and procedures in this section may require special precautions to ensure the safety of the personnel performing the operations. Information that potentially raises safety issues is indicated by a (⚠)warning symbol. Kindly refer to the following safety messages before performing an operation preceded by this symbol.

⚠ WARNING

Failure to follow these installation guidelines could result in death or serious injury.

Ensure only qualified personnel perform the installation.

Explosions could result in death or serious injury.

Do not remove the housing covers in explosive atmospheres when the circuit is live.
Before connecting a handheld communicator in an explosive atmosphere, ensure that the instruments are installed in accordance with intrinsically safe or non-incendive field wiring practices.
Verify that the operating atmosphere of the transmitter is consistent with the appropriate hazardous locations certifications.
All connection head covers must be fully engaged to meet explosion-proof requirements.

Process leaks could result in death or serious injury.

Do not remove the thermowell while in operation.
Before applying pressure, install and tighten thermowells and sensors.

Electrical shock could cause death or serious injury.

Use extreme caution when making contact with the leads and terminals.

2.2 Connections

Single input connection

2-wire / 3-wrire / 4 w-wire RTD or lin. R

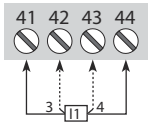

Thermocouple (TC) (internal CJC or external 2-wire / 3-wire / 4-wire CJC)(1)

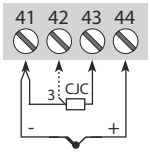

mV

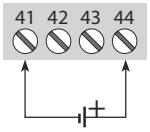

3-wire / 4-wire potentiometer

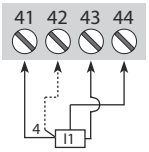

(1) When using thermocouple input, configure the transmitter for either constant, internal, or external CJC via a Pt100 or Ni100 sensor. The input must be selected during device configuration.

Loop connections

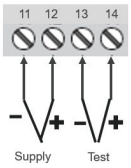

Dual input connection

Input 1

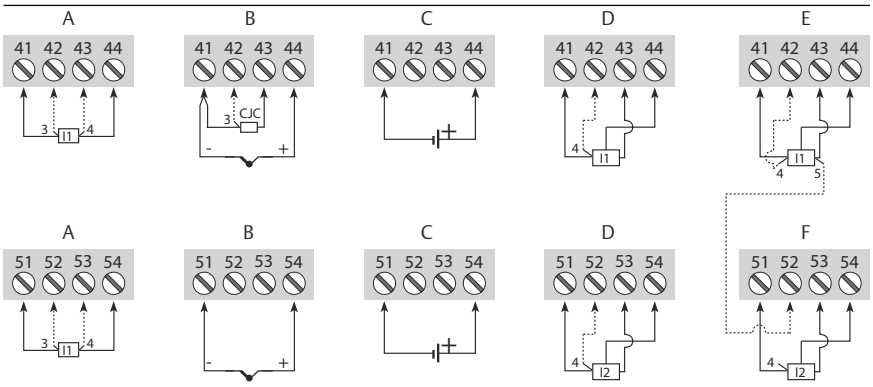

Input 2

A. 2 w / 3 w / 4 w RTD or lin. R
B. TC (internal CJC or external 2 w / 3 w / 4 w CJC)(1)
C. mV
D. 3 w / 4 w potentiometer
E. 5 w potentiometer
F. 3 w potentiometer

(1) When using thermocouple input, configure the transmitter for either constant, internal, or external CJC via a Pt100 or Ni100 sensor. You must select the input during device configuration.

Output

2-wire installation

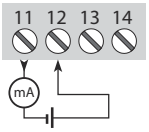

2.3 Multidrop mode

Communication with up to 63 uniquely numbered transmitters in parallel on a digital HART® 2-wire system can be facilitated using either a HART communicator or a HART modem connected across terminals BC or CD, requiring transmitters to be in multidrop mode with a 4 mA signal and a total loop current not exceeding 252 mA.

The communication is either by means of a HART communicator or a HART modem.

The HART communicator or a HART modem can be connected across BC or CD.

The outputs of a maximum of 63 transmitters can be connected in parallel for a digital HART 2-wire communication.

Before connecting each transmitter, configure it with a unique number from 1 to 63. If two transmitters are configured with the same number, both will be excluded. Program the transmitters for Multidrop mode (with a fixed output signal of 4 mA). Maximum current in the loop is therefore 252 mA.

Figure 2-1: Multidrop Connection

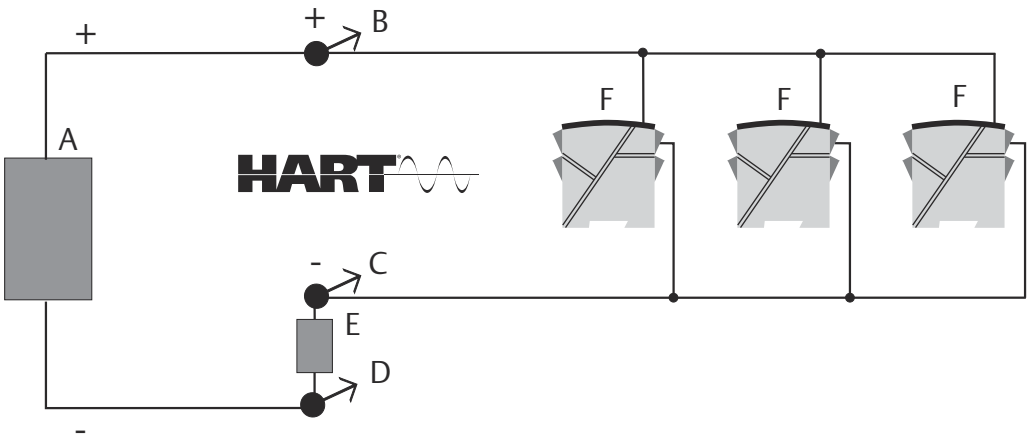

A. Power supply
B. Connection
C. Connection
D. Connection
E. 250 Ω < R_{load} < 1100 Ω
F. Transmitter

3 Configuration

3.1 Safety messages

Instructions and procedures in this section may require special precautions to ensure the safety of the personnel performing the operations. Information that potentially raises safety issues is indicated by a (⚠)warning symbol. Kindly refer to the following safety messages before performing an operation preceded by this symbol.

⚠ WARNING

Failure to follow these installation guidelines could result in death or serious injury.

Ensure only qualified personnel perform the installation.

Explosions could result in death or serious injury.

Do not remove the housing covers in explosive atmospheres when the circuit is live.
Before connecting a handheld communicator in an explosive atmosphere, ensure that the instruments are installed in accordance with intrinsically safe or non-incendive field wiring practices.
Verify that the operating atmosphere of the transmitter is consistent with the appropriate hazardous locations certifications.
All connection head covers must be fully engaged to meet explosion-proof requirements.

Process leaks could result in death or serious injury.

Do not remove the thermowell while in operation.
Before applying pressure, install and tighten thermowells and sensors.

Electrical shock could cause death or serious injury.

Use extreme caution when making contact with the leads and terminals.

3.2 Configuration methods

Configure the transmitter.

Configure the transmitter in the following ways:

- Using a HART® communicator with Emerson's DDL driver
- Via programming framework (such as AMS Device Manager, distributed control system (DCS), PACTware™)

Both requiring product-specific software support from sources such as the FieldComm Group or Emerson.

HART communicator

To get access to product-specific commands, load the HART communicator with Emerson's DDL driver. Order this through either the FieldComm Group or Emerson.

Figure 3-1: HART communicator

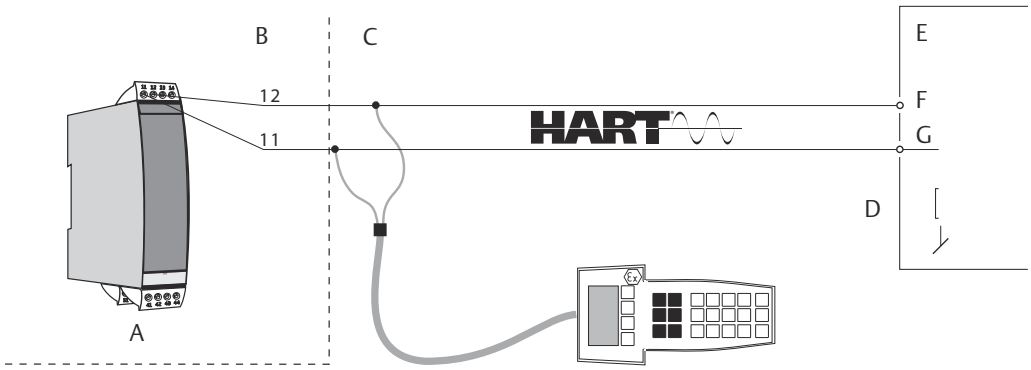

A. Transmitter
B. Ex area
C. Safe area
D. 250 Ω < R_{load} < 1100 Ω
E. Receiving equipment
F. +V supply
G. Input

Programming framework

There is support for both EDD and FDT®/DTM™ technology, offering configuration and monitoring via relevant DCS/AMS and supported management packages (such as PACTware).

Figure 3-2: Programming framework



A. Transmitter
B. 250 Ω < R_{load} < 1100 Ω
C. Process computer
D. DCS, etc.

3.3 Sensor error value configuration considerations

The device can be configured to output a user defined error current for broken and shorted sensors. This functionality enables users to customize how the device sends out alerts pertaining to specific sensor issues. As a default, these values are set outside of the ***Current Output Range*** (4-20 mA).

Broken sensor error value:	`36 BrkSensVal`	Broken sensor alarm analog output signal Current in mA indicating broken sensor alarm Default: 21.75 mA Range: 3.5...23.0 mA **Note** For SIL mode the value must be < 3.6 mA or > 21.0 mA (Conforms to NAMUR NE43).
Shortened sensor error value:	`36 ShortSensVal`	Shorted sensor alarm analog output signal Current in mA indicating broken sensor alarm Default: 21.75 mA Range: 3.5...23.0 mA **Note** For SIL mode the value must be < 3.6 mA or > 21.0 mA (Conforms to NAMUR NE43).

⚠ WARNING

Broken/Shorted Sensor Error Value

Although not recommended, it is possible for users to set either a Broken or Shorted Sensor current value to a value within the Current Output Range. Under this configuration, a device with a shorted or broken sensor state will output a current value which could be interpreted as a temperature reading within the Current Output Range by the control system. This scenario could potentially lead to erroneous temperature readings which could result in death or serious injury.

Safe Parameterization – User Responsibility

It is the responsibility of the user to configure the transmitter so that it fits the required safety application. The safe parametrization can be done with assistance from any tool that can configure and verify the parameters described, and that supports the procedures described in this section. The configuration tool must be specifically developed to support this, i.e. a generic HART tool cannot be used, but a HART tool containing specific Device Drivers (DD) or Device Type Manager (DTM) running in a generic framework is acceptable.

4 Operation and Maintenance

4.1 Safety messages

Instructions and procedures in this section may require special precautions to ensure the safety of the personnel performing the operations. Information that potentially raises safety issues is indicated by a (⚠)warning symbol. Kindly refer to the following safety messages before performing an operation preceded by this symbol.

⚠ WARNING

Failure to follow these installation guidelines could result in death or serious injury.

Ensure only qualified personnel perform the installation.

Explosions could result in death or serious injury.

Do not remove the housing covers in explosive atmospheres when the circuit is live.
Before connecting a handheld communicator in an explosive atmosphere, ensure that the instruments are installed in accordance with intrinsically safe or non-incendive field wiring practices.
Verify that the operating atmosphere of the transmitter is consistent with the appropriate hazardous locations certifications.
All connection head covers must be fully engaged to meet explosion-proof requirements.

Process leaks could result in death or serious injury.

Do not remove the thermowell while in operation.
Before applying pressure, install and tighten thermowells and sensors.

Electrical shock could cause death or serious injury.

Use extreme caution when making contact with the leads and terminals.

4.2 LED functionality

Onboard LED indicates faults according to NAMUR NE44 and NE107.

LED status	Condition
Constant green	Device OK
Off	No supply
Flashing red	Fault indication independent of the device (e.g. wire break, sensor short circuit, violation of input or output limits)
Constant red	Device error

4.3 Jumpers

The Rosemount Single and Dual Input 644R/T Transmitters have two front jumpers: one to enable **Write Protection** and one to select the output current at **Safe State** to go above 21 mA as specified in NAMUR NE43.

If the jumper is not inserted, the output current at **Safe State** will go lower than 3.6 mA as specified in NAMUR NE43.

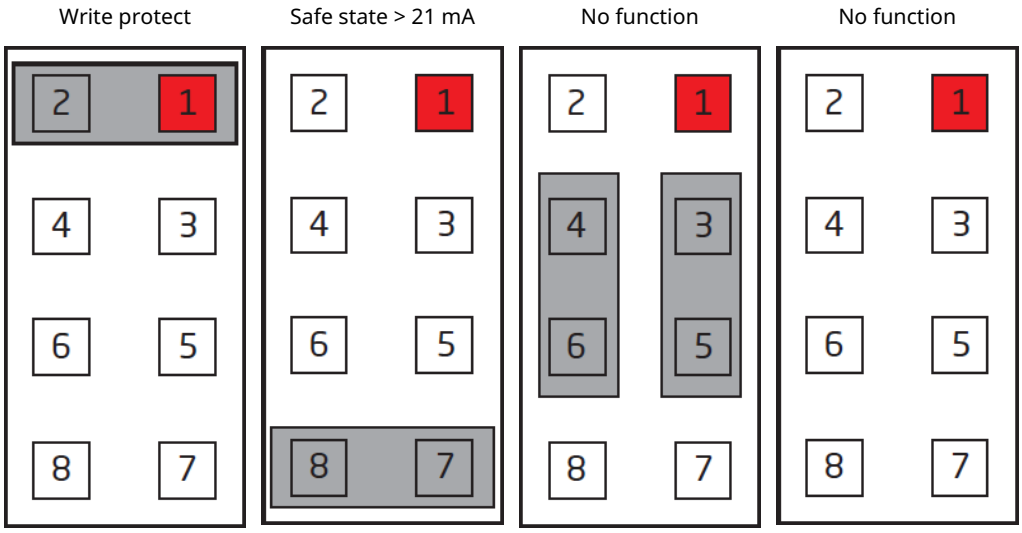

4.4 Test pins

The test pins allow measurement of loop current directly while maintaining loop integrity.

Power must be connected to the transmitter (terminals 11 and 12) when using the test pins (terminals 13 and 14).

⚠ CAUTION

For hazardous area installation, only certified test equipment may be used.

4.5 HART® commands

For definitions and further information on HART commands, consult the HART Field Device Specification.

Table 4-1: Advanced functions

Function	Description
Differential	Analog output signal is proportional to the difference between Sensor 1 and Sensor 2 measurements. Analog output = Sensor 1 – Sensor 2 or Sensor 2 – Sensor 1 or |Sensor 2 – Sensor 1|
Average measurement	Analog output signal is proportional to the average of Sensor 1 and Sensor 2 measurements. Analog output = 0.5* (Sensor 1 + Sensor 2)

Table 4-1: Advanced functions *(continued)*

Function	Description		
Maximum	Analog output is proportional to the Sensor with the highest value. IF (Sensor 1 > Sensor 2) THEN AnalogOutput = Sensor 1 ELSE AnalogOutput = Sensor 2		
Minimum	Analog output is proportional to the Sensor with the lowest value. IF (Sensor 1 < Sensor 2) THEN AnalogOutput = Sensor 1 ELSE AnalogOutput = Sensor 2		
Sensor drift	If the differential between Sensor 1 and Sensor 2 measured values exceed a predefined limit then a sensor drift error is indicated. IF ABS (Sensor 1 – Sensor 2) > SensorDriftLimit THEN IndicateSensor-DriftError		
Redundancy (Hot Backup™)	Analog output is proportional to Sensor 1 as long as no error is detected and Sensor is within user-defined limits. If sensor error on Sensor 1 is detected or if sensor 1 value is outside userdefined limits, analog output then becomes proportional to Sensor 2 and a warning indication is generated. IF(NoSensorErrorOnSensor1 AND Sensor1InsideLimits) THEN AnalogOutput = Sensor 1 ELSEIF(NoSensorErrorOnSensor2 AND Sensor2InsideLimits) THEN AnalogOutput = Sensor 2		
Customized linearization - polynomial type	Supports polynomial linearization up to five segments, each with up to 4th order polynomials.		
Customized linearization - Callendar Van Dusen	Supports direct entry of CVD constants.		
Customized linearization - table linearization	Supports table linearization with up to 60 in/out values.		
Customized linearization - 2nd order spline linearization	Supports 2nd order spline linearization with up to 40 output values.		
Runtime meter - transmitter electronics(1)	< -50 °C -50...-30 °C -30...-10 °C	-10...+10 °C +10...+30 °C +30...+50 °C	+50...+70 °C +70...+85 °C >85 °C
Runtime meter - Sensors	Recording of Sensor measurement values during operation, logging time spent in each of nine fixed sub Sensor ranges. Subranges are defined individually for each Sensor type.		
Slave pointer - transmitter electronics	Recording of minimum/maximum internal transmitter temperature for device's complete lifetime.		
Slave pointer - Sensors	Recording of minimum/maximum values for Sensor/s measurements is saved. Values are reset when measurement configuration is changed.		

(1) Recording of internal transmitter temperatures during operation, logging time spent in each of nine fixed sub temperature ranges.

Dynamic variable mapping

Four dynamic variables are supported PV, SV, TV, and QV.

Using HART commands, these may be assigned to the Device Variables shown in the table below.

The device variable mapped to PV controls the loop current.

Input Type	PV	SV, TV, QV
Single Sensor	Sensor 1	Electronics Temperature
Dual Sensor	Sensor 1	Sensor 2
	S1, with S2 Hot Backup	Average S1 and S2
		Difference S1-S2
		Difference S2-S1
		Absolute Difference S1-S2
		S2, with S1 with Hot Backup
		Electronics Temperature

Write protection by software

The default active password when the device leaves the factory is '********' The user is able to change the default password.

Note
The universal active password "00002008" will always be accepted and this value cannot be changed.

The universal active password shall only be used if the active password has been lost and needs to be reset to a known value.

When changing the password, use only Latin-1 characters that can be entered and displayed on any terminal.

When write protection is enabled, no **write** commands are accepted regardless of the **Write Protect** hardware jumper position.

Write protection by jumper

If a hardware jumper is set in **Write Protect** position, no **write** commands are accepted even if disabled by software.

5 Troubleshooting

5.1 Primary value out of limits

LED status: flashing red

The device variable mapped to PV (and Analog Output Current) is beyond its operating limits.

Recommended action

Reconnect or repair sensor.

5.2 Non-primary variable out of limits

LED status: flashing red

Any other device variable is beyond its operating limits.

Recommended action

Reconnect or repair sensor.

5.3 Loop current saturated

LED status: flashing red

The loop current has reached the Current Output Upper Limit (UL) or Output Lower Limit (LL) as configured, and is no longer corresponding to the PV value.

Recommended action

Reconnect or repair sensor.

5.4 Primary sensor 1 error

LED status: flashing red

A sensor error (broken/shorted sensor) is detected on Sensor 1.

Recommended action

Reconnect or repair sensor.

5.5 Primary sensor 2 error (only if sensor 2 is enabled)

LED status: flashing red

A sensor error (broken/shorted sensor) is detected on Sensor 2. This is only possible if Sensor type 2 is ”None”.

Recommended action

Reconnect or repair sensor.

5.6 Dual input: Sensor Drift Alert

LED status: flashing red

The difference between measurements on Sensor 1 and Sensor 2 is outside the configured sensor drift limit.

Recommended actions

Reconnect or repair sensor.

5.7 Hot Backup Active

LED status: no impact

A sensor error (broken/shorted) is detected, backup sensor is in use.

Recommended actions

Reconnect or repair sensor.

5.8 Hot Backup Active

LED status: no impact

A sensor error (broken/shorted) is detected on the backup sensor, no backup available.

Recommended actions

Reconnect or repair sensor.

5.9 Configuration not supported by device

LED status: solid red

Configuration is temporary invalid < 3 seconds, e.g. while downloading parameters.

Recommended action

Correct and re-send the configuration.

5.10 Electronic temperature out of limits

LED status: flashing red

The device is operated outside its specified temperature range.

Recommended action

Check operating temperature.

LED status: solid red

The device is operated outside its specified temperature range in SIL mode.

Recommended action

Check operating temperature.

5.11 Power supply voltage issues

LED status: off

Power is applied but still too low.

Recommended action

1. Check power supply (at output terminals).
2. If the error is persistent send the device for evaluation or replace the device.

5.12 Attempting or failed to enter SIL mode

LED status: solid red

The device is transitioning to SIL mode, or has failed to do so.

Recommended actions

The SIL configuration must be validated or normal operation must be re-selected.

5.13 Electronics failure

LED status: solid red

An unrecoverable error occurred in the internal communication to the input CPU.

Recommended action

1. Reset or re-power the device.
2. If the error is persistent send the device for evaluation or replace the device.

5.14 Electronics failure

LED status: solid red

An unrecoverable error occurred in the input CPU.

Recommended action

1. Reset or re-power the device.
2. If the error is persistent send the device for evaluation or replace the device.

5.15 Power supply voltage issues

LED status: solid red

The device is operated below its specified voltage supply range.

Recommended action

1. Check power supply (at output terminals). Reset or re-power the device.

2. If the error is persistent send the device for evaluation or replace the device.

5.16 Loop current read back error

LED status: solid red

The read back loop current differs from the calculated output current.

Recommended actions

1. Check power supply (at output terminals). Reset or re-power the device.
2. If the error is persistent send the device for evaluation or replace the device.

5.17 Power supply voltage issues

LED status: solid red

The device is operated above its specified voltage supply range.

Recommended actions

1. Check power supply (at output terminals). Reset or re-power the device.
2. If the error is persistent send the device for evaluation or replace the device.

5.18 Electronics failure

LED status: solid red

The configuration in the NVM has become inconsistent.

Recommended action

1. Correct and/or re-send the configuration.
2. If the error is persistent send the device for evaluation or replace the device.

5.19 Electronics failure

LED status: solid red

An unrecoverable error occurred in the internal communication to the EEPROM.

Recommended action

1. Reset or re-power the device.
2. If the error is persistent send in the device for evaluation and replace the device.

5.20 Electronics failure

LED status: solid red

An unrecoverable memory error occurred in the internal main CPU.

Recommended action

1. Reset or re-power the device.

2. If the error is persistent send the device for evaluation or replace the device.

5.21 Electronics failure

LED status: solid red

An exception error occurred in the main CPU program execution.

Recommended action

1. Reset or re-power the device.
2. If the error is persistent send the device for evaluation or replace the device.

5.22 Watchdog reset executed

LED status: solid red

The main program was reset unintentionally due to a failed code execution.

Recommended action

Correct and/or re-send the configuration.

5.23 Internal RTD sensor error

LED status: solid red

Sensor error is detected on the internal temperature sensor.

Recommended action

Reset or re-power the device.

5.24 Sensor failure

LED status: flashing red

A critical measurement error is detected on internal voltage reference.

Recommended action

1. Reconnect or repair sensor.
2. If the error is persistent send the device for evaluation or replace the device.

5.25 Sensor measurement error

LED status: flashing red

A critical measurement error is detected on Sensor 1.

Recommended action

1. Reconnect or repair sensor.
2. If the error is persistent send the device for evaluation or replace the device.

5.26 Sensor measurement error

LED status: flashing red

A critical measurement error is detected on Sensor 2.

Recommended action

1. Reconnect or repair sensor.
2. If the error is persistent send the device for evaluation or replace the device.

5.27 Sensor measurement error

LED status: flashing red

A critical measurement error is detected on the ground measurement.

Recommended actions

1. Reconnect or repair sensor.
2. If the error is persistent send the device for evaluation or replace the device.

A Reference Data

A.1 Product certifications

To view current Rosemount 644 product certifications:

Procedure

1. Go to Rosemount 644 Temperature Transmitter product detail page.
2. Scroll as needed to the green menu bar and select **Documents & Drawings**.
3. Click **Manuals & Guides**.
4. Select the appropriate Quick Start Guide.

A.2 Ordering information, specifications, and drawings

To view current Rosemount 644 ordering information, specifications, and drawingss:

Procedure

1. Go to Rosemount 644 Temperature Transmitter product detail page.
2. Scroll as needed to the green menu bar and select **Documents & Drawings**.
3. For installation drawings, click **Drawings & Schematics**.
4. Select the appropriate drawing.
5. For ordering information, specifications, and dimensional drawings, select **Data Sheets & Bulletins**.
6. Select the appropriate Product Data Sheet.

A.3 Dimensional drawings

Single Sensor Input

Figure A-1: Single Sensor Input

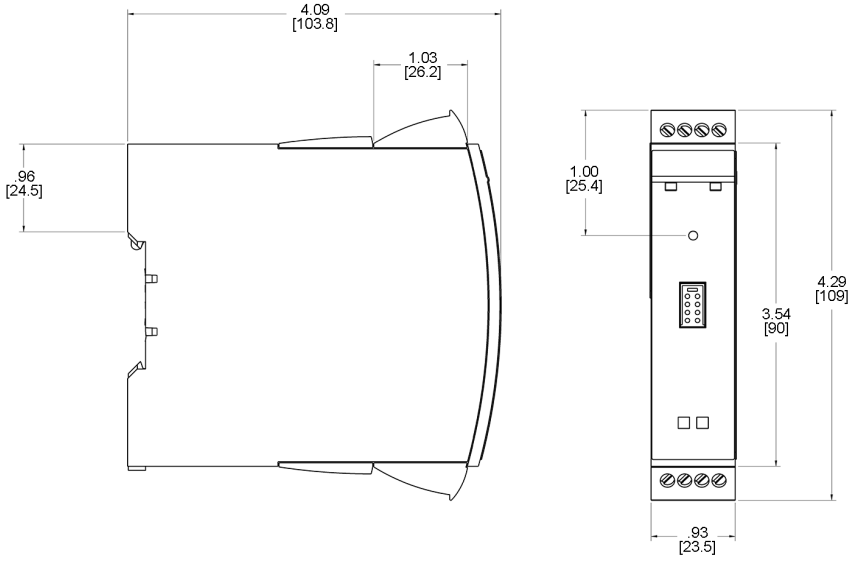

Dimensions are in inches (millimeters).

Dual Sensor Input

Figure A-2: Dual Sensor Input

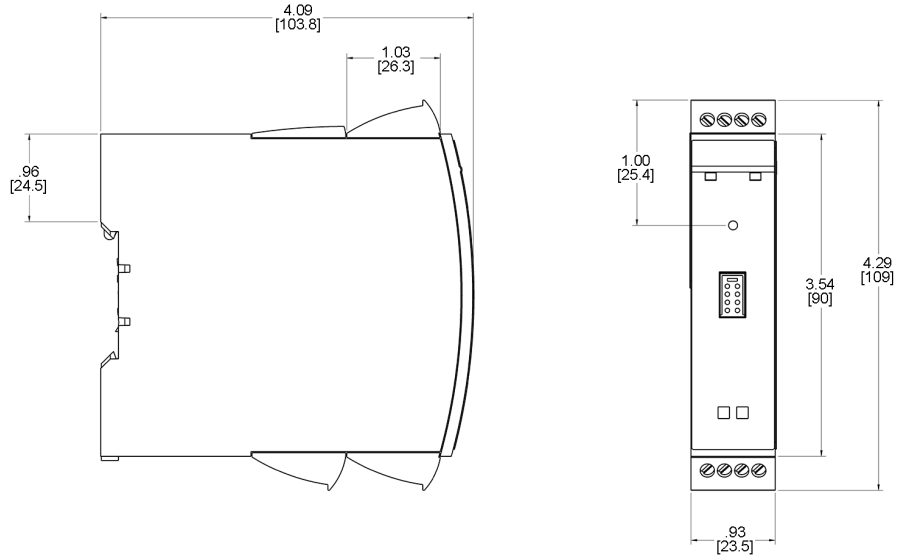

Dimensions are in inches (millimeters).

B Field Communicator Menu Tree

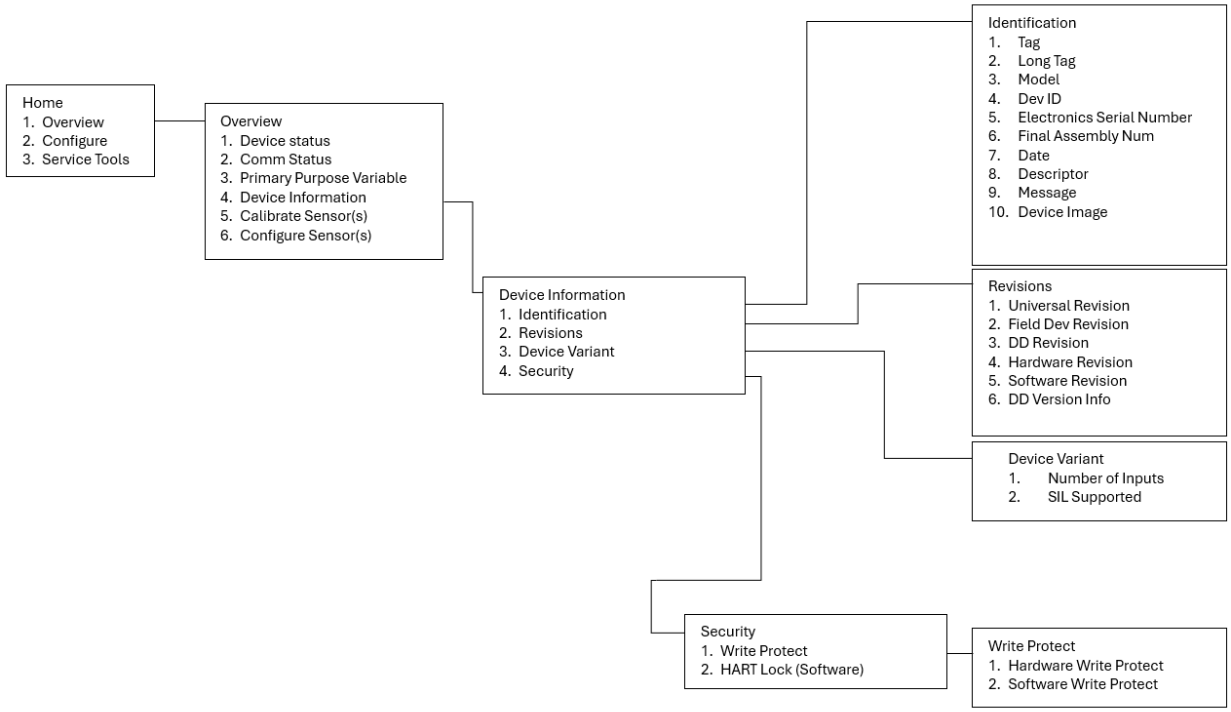

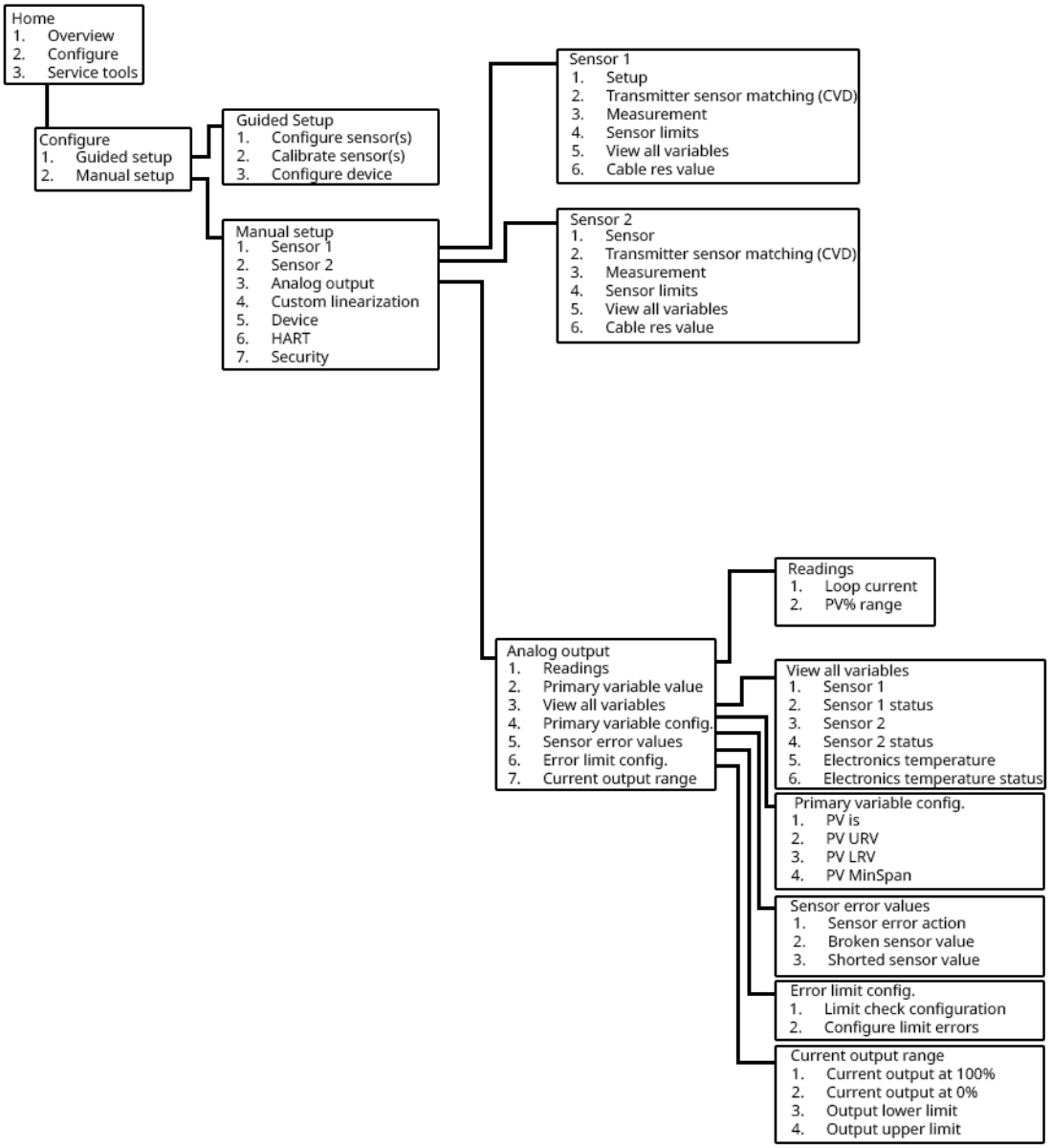
Home
1. Overview
2. Configure
3. Service tools
Configure
1. Guided setup
2. Manual setup
Guided Setup
1. Configure sensor(s)
2. Calibrate sensor(s)
3. Configure device
Manual setup
1. Sensor 1
2. Sensor 2
3. Analog output
4. Custom linearization
5. Device
6. HART
7. Security
Sensor 1
1. Setup
2. Transmitter sensor matching (CVD)
3. Measurement
4. Sensor limits
5. View all variables
6. Cable res value
Sensor 2
1. Sensor
2. Transmitter sensor matching (CVD)
3. Measurement
4. Sensor limits
5. View all variables
6. Cable res value
Analog output
1. Readings
2. Primary variable value
3. View all variables
4. Primary variable config.
5. Sensor error values
6. Error limit config.
7. Current output range
Readings
1. Loop current
2. PV% range
View all variables
1. Sensor 1
2. Sensor 1 status
3. Sensor 2
4. Sensor 2 status
5. Electronics temperature
6. Electronics temperature status
Primary variable config.
1. PV is
2. PV URV
3. PV LRV
4. PV MinSpan
Sensor error values
1. Sensor error action
2. Broken sensor value
3. Shorted sensor value
Error limit config.
1. Limit check configuration
2. Configure limit errors
Current output range
1. Current output at 100%
2. Current output at 0%
3. Output lower limit
4. Output upper limit

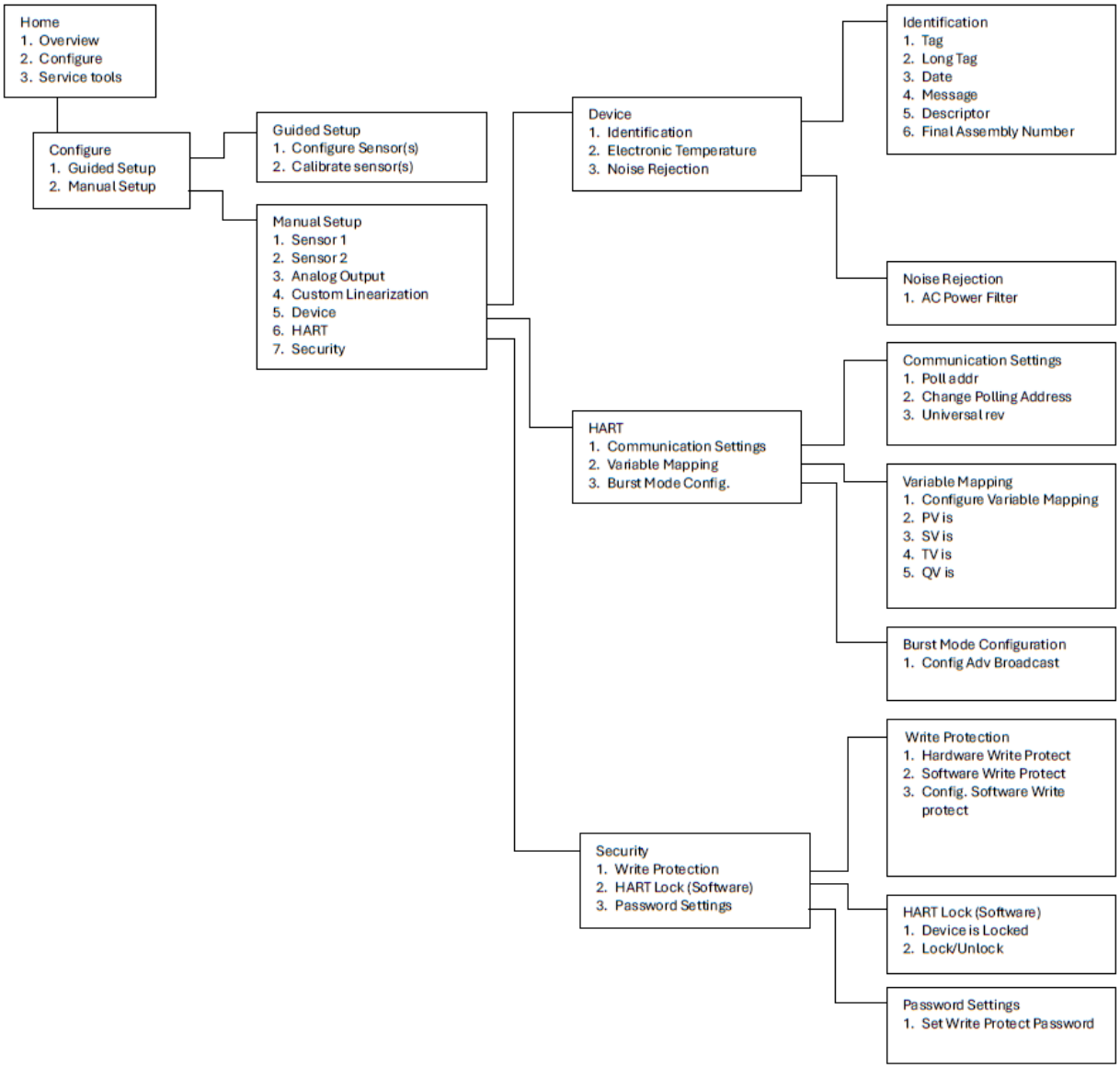
Home
1. Overview
2. Configure
3. Service tools
Configure
1. Guided Setup
2. Manual Setup
Guided Setup
1. Configure Sensor(s)
2. Calibrate sensor(s)
Manual Setup
1. Sensor 1
2. Sensor 2
3. Analog Output
4. Custom Linearization
5. Device
6. HART
7. Security
Device
1. Identification
2. Electronic Temperature
3. Noise Rejection
Identification
1. Tag
2. Long Tag
3. Date
4. Message
5. Descriptor
6. Final Assembly Number
Noise Rejection
1. AC Power Filter
HART
1. Communication Settings
2. Variable Mapping
3. Burst Mode Config.
Communication Settings
1. Poll addr
2. Change Polling Address
3. Universal rev
Variable Mapping
1. Configure Variable Mapping
2. PV is
3. SV is
4. TV is
5. QV is
Burst Mode Configuration
1. Config Adv Broadcast
Security
1. Write Protection
2. HART Lock (Software)
3. Password Settings
Write Protection
1. Hardware Write Protect
2. Software Write Protect
3. Config. Software Write protect
HART Lock (Software)
1. Device is Locked
2. Lock/Unlock
Password Settings
1. Set Write Protect Password

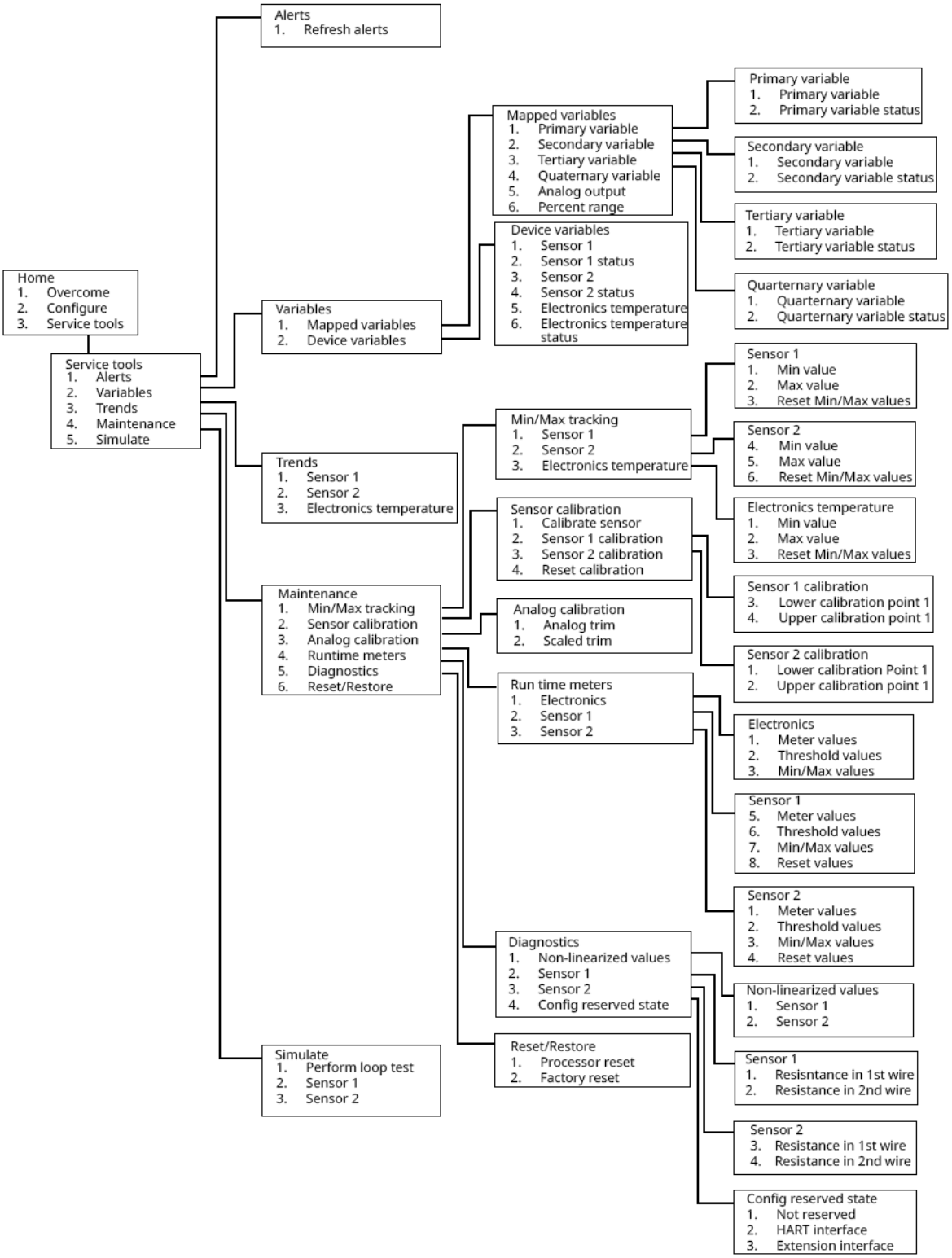
Home
1. Overcome
2. Configure
3. Service tools
Service tools
1. Alerts
2. Variables
3. Trends
4. Maintenance
5. Simulate
Alerts
1. Refresh alerts
Variables
1. Mapped variables
2. Device variables
Mapped variables
1. Primary variable
2. Secondary variable
3. Tertiary variable
4. Quaternary variable
5. Analog output
6. Percent range
Primary variable
1. Primary variable
2. Primary variable status
Secondary variable
1. Secondary variable
2. Secondary variable status
Tertiary variable
1. Tertiary variable
2. Tertiary variable status
Quarternary variable
1. Quarternary variable
2. Quarternary variable status
Device variables
1. Sensor 1
2. Sensor 1 status
3. Sensor 2
4. Sensor 2 status
5. Electronics temperature
6. Electronics temperature status
Trends
1. Sensor 1
2. Sensor 2
3. Electronics temperature
Maintenance
1. Min/Max tracking
2. Sensor calibration
3. Analog calibration
4. Runtime meters
5. Diagnostics
6. Reset/Restore
Min/Max tracking
1. Sensor 1
2. Sensor 2
3. Electronics temperature
Sensor 1
1. Min value
2. Max value
3. Reset Min/Max values
Sensor 2
4. Min value
5. Max value
6. Reset Min/Max values
Electronics temperature
1. Min value
2. Max value
3. Reset Min/Max values
Sensor calibration
1. Calibrate sensor
2. Sensor 1 calibration
3. Sensor 2 calibration
4. Reset calibration
Sensor 1 calibration
3. Lower calibration point 1
4. Upper calibration point 1
Sensor 2 calibration
1. Lower calibration Point 1
2. Upper calibration point 1
Analog calibration
1. Analog trim
2. Scaled trim
Run time meters
1. Electronics
2. Sensor 1
3. Sensor 2
Electronics
1. Meter values
2. Threshold values
3. Min/Max values
Sensor 1
5. Meter values
6. Threshold values
7. Min/Max values
8. Reset values
Sensor 2
1. Meter values
2. Threshold values
3. Min/Max values
4. Reset values
Diagnostics
1. Non-linearized values
2. Sensor 1
3. Sensor 2
4. Config reserved state
Non-linearized values
1. Sensor 1
2. Sensor 2
Sensor 1
1. Resisntance in 1st wire
2. Resistance in 2nd wire
Sensor 2
3. Resistance in 1st wire
4. Resistance in 2nd wire
Config reserved state
1. Not reserved
2. HART interface
3. Extension interface
Reset/Restore
1. Processor reset
2. Factory reset
Simulate
1. Perform loop test
2. Sensor 1
3. Sensor 2

00809-0500-4728
Rev. AE
2025

For more information: **Emerson.com/global**

©2025 Emerson. All rights reserved.

Emerson Terms and Conditions of Sale are available upon request. The Emerson logo is a trademark and service mark of Emerson Electric Co. Rosemount is a mark of one of the Emerson family of companies. All other marks are the property of their respective owners.

ROSEMOUNT™

EMERSON™