Operating Manual
MHM-97884, Rev 2.1
March 2026

AMS EZ 1000

Converter for Eddy Current Sensors



EMERSON

Copyright

© 2026, Emerson. All rights reserved.

No part of this publication may be reproduced, transmitted, transcribed, stored in a retrieval system, or translated into any language in any form by any means without the written permission of Emerson.

Disclaimer

This manual is provided for informational purposes. EMERSON MAKES NO WARRANTY OF ANY KIND WITH REGARD TO THIS MATERIAL, INCLUDING, BUT NOT LIMITED TO, THE IMPLIED WARRANTIES OF MERCHANTABILITY AND FITNESS FOR A PARTICULAR PURPOSE. Emerson shall not be liable for errors, omissions, or inconsistencies that may be contained herein or for incidental or consequential damages in connection with the furnishing, performance, or use of this material. Information in this document is subject to change without notice and does not represent a commitment on the part of Emerson. The information in this manual is not all-inclusive and cannot cover all unique situations.

Patents

The product(s) described in this manual are covered under existing and pending patents.



Vermerk zur Installation der Messketten in explosionsgefährdeter Umgebung.

Soll die Messkette in explosionsgefährdeter Umgebung installiert werden, so ist auf die Einhaltung der in der Gebrauchsanwesisung enthaltenen Installationshinweise zu achten. Sollten dabei sprachliche Schwierigkeiten auftreten, wenden Sie sich bitte an die Herstellerfirma, sie wird Ihnen eine Übersetzung der relevanten Artikel in der Landessprache des Verwendungslandes zukommen lassen.



Nota fuq l–installazzjoni tal–ktajjen tal–kejl f'ambjent esplożiv

Jekk il–katina tal–kejl suppost li tigi installata f'ambjent esplożiv, hu importanti li ssegwi l–istruzzjonijiet pertinenti tal–manwal.Jekk issib xi diffikultà bil–lingwa, jekk joghgbok ikkuntattja lill–manifattur biex tikseb traduzz-joni tal –paragrafi rilevanti fil–lingwa mehtiega.



Anmärkning beträffande installation av mätkedjorna i explosionsfarlig miljö.

Ska mätkedjan installeras i explosionsfarlig miljö, måste de anvisningar följas som ges i instruktionsboken beträffande installationen. Skulle därvid språkproblem uppstå, ber vi dig kontakta det tillverkande företaget som då kommer att sända dig en översättning av de relevanta artiklarna på användningslandets språk.



Opomba za namestitev merilne verige v eksplozivno ogroženem okolju

Èe se merilna veriga namešèa v eksplozivno ogroženem okolju, je potrebno upoštevati namestitvena opozorila, ki so v Navodilih za uporabo. Èe se pri tem pojavijo jezikovne težave, se posvetujte z izdelovalcem; poslali vam bodo prevod ustreznih èlankov v jeziku države, kjer se naprava uporablja.



Záznam k inštalácii meracích reťazcov vo výbušnom prostredí

Ak má byť merací reťazec inštalovaný vo výbušnom prostredí, treba dbať na dodržiavanie pokynov k inštalácii, uvedených v návode na použitie. V prípade, že by sa pritom vyskytli jazykové problémy, obráťte sa prosím na výrobcu, ktorý Vám zašle preklad relevantných èlánkov v jazyku Vašej krajiny.



Nota referente à instalação de cadeias de agrimensor em ambientes potencialmente explosivos

Caso a cadeia de agrimensor deva ser instalada em um ambiente potencialmente explosivo, é imprescindível observar e cumprir as indicações de instalação das instruções de serviço. Caso tenha dificuldades idiomáticas, queira entrar em contato com a firma produtora, esta poderá enviar–lhe uma tradução dos capítulos mais importantes no idioma do país onde o produto deverá ser empregado.



Wskazówka dotycząca instalacji łańcuchów mierniczych w otoczeniach zagrożonych eksplozją.

Jeżeli łańcuch mierniczy ma być zainstalowany w otoczeniu zagrożonym eksplozją, należy uwzględnić wskazówki dotyczące instalacji, które są zawarte w instrukcji obsługi. Jeżeli w trakcie lektury wystąpią jakiekolwiek problemy związane ze zrozumieniem tekstu, prosimy zwrócić się do producenta, który chętnie wykona tłumaczenie wybranych części dokumentacji na język danego kraju.



Opmerking m.b.t. installatie van elektrische meet circuits in explosiegevaarlijke omgeving

Dient de installatie van elektrische meet circuits in een explosiegevaarlijke omgeving te geschieden, moet men toezien dat de in de gebruikshandleiding opgenomen installatieinstructies worden nageleefd. Bij taalkundige problemen gelieve contact op te nemen met de fabrikant, deze zal u vervolgens een vertaling in de taal van het gebruiksland doen toekomen.



Pastaba dėl matavimo grandinės įrengimo sprogimo atžvilgiu pavojingoje aplinkoje

Jei matavimo grandinė turi būti įrengta sprogimo atžvilgiu pavojingoje aplinkoje, privaloma laikytis vartotojo instrukcijoje pateiktų įrengimo nurodymų. Jei kiltų sunkumų dėl kalbos, prašome kreiptis į gamintojo įmonę, kuri pateiks Jums reikiamo skyriaus vertimą į vartotojo valstybės kalbą.



Nota sull'installazione delle catene per misurazione in ambienti a rischio di esplosioni

Nel caso in cui si debbano installare le catene per misurazione in ambienti a rischio di esplosioni, è necessario attenersi alle avvertenze per l'installazione contenute nelle istruzioni d'uso. Per difficoltà di carattere linguistico, rivolgetevi alla ditta produttrice. Quest'ultima Vi farà pervenire una traduzione degli articoli rilevanti nella lingua del paese d'impiego.



Megjegyzés a mérőláncok robbanásveszélyes környezetben történő szereléséhez.

Ha a mérőláncot robbanásveszélyes környezetben kell felszerelni, akkor ügyeljen a Használati útmutatóban közölt szerelési utasítások betartására. Amennyiben nyelvi nehézségek merülnek fel, szíveskedjen a gyártó céghez fordulni, amely elküldi Önnek a felhasználó ország nyelvére lefordított, erre vonatkozó cikket.



Remarque concernant l'installation des chaînes de mesure dans un environnement présentant un risque d'explosion

Si la chaîne de mesure doit être installée dans un environnement présentant un risque d'explosion, il est impératif de veiller à respecter les consignes d'installation contenues dans les instructions de service. S'il devait ce faisant surgir des problèmes linguistiques, veuillez vous adresser à la société fabricante: elle vous fera parvenir une traduction des articles significatifs dans la langue du pays de mise en oeuvre.



Huomautus mittausketjun asentamisesta räjähdysalttiissa ympäristössä

Jos mittausketju tulee asentaa räjähdysalttiissa ympäristössä, on käyttöohjeessa annettuja asennusohjeita noudatettava. Jos käyttöohjeessa käytetty kieli aiheuttaa ongelmia, kääntykää valmistajayrityksen puoleen. Se toimittaa käyttöönne tarvittavat artikkelit käyttömaan vir alliselle kielelle käännettynä.



Juhend mõõdukettide ülespanemiseks plahvatusohtlikus piirkonnas.

Kui panna üles mõõdukettid plahvatusohtlikkus piirkonnas, nii tuleb jälgida kasutusjuhendis sisaldatud instalationimärkmeid. Juhul kui tekkivad raskused keelega, siis pöörduge palun tootja poole. Tootja saadab emakeelse tõlge vastavalt artiklile ning maale.



Notas sobre la instalación de cadenas de medición en un entorno potencialmente explosivo.

Si ha de instalar la cadena de medición en un entorno potencialmente explosivo, deberá respetar las indicaciones sobre la instalación, contenidas en el manual de uso. Si surgieran dificultades lingüísticas, póngase en contacto con la empresa fabricante, que le facilitará una traducción del artículo en la lengua del país donde se emplee.



Note on the installation of the measuring chains in an explosive environment

If the measuring chain is supposed to be installed in an explosive environment, it is important to follow the pertinent installation instructions in the manual. Should you encounter difficulties with the language, please contact the manufacturer to obtain a translation of the relevant paragraphs into the language required.



Σημείωση για την εγκατάσταση αλυσίδωυ μέτρησης σε περιβάλλου, στο οποίο υπàρΧει κίυδυυος έκρηξης

Εάυ η αλυσυδα μέτρησης πρόκειται υα εγκατασταΘεί σε περιβάλλου, στο οποίο υπάρΧει κίυδυυος έκρηξης, πρέπει υα τηρηΘούυ οπωσδήποτε οι οδηγίες εγκατάστασης που περιλαμβάυουται στις οδηγίες Χρήσης. Εάυ υπάρξουυ γλωσσικές δυσκολίες καταυόησης, παρακαλούμε υα απευΘυυΘείτε στηυ κατασκευάστρια εταιρεία, η οποία Θα φρουτίσει για την αποστολή μιας μετάφρασης τωυ σΧετικωυ άρΘρωυ στη γλωσσα της Χωρας Χρήσης.



Info vedrørende installation af målekæderne i eksplosionstruede omgivelser

Hvis målekæden skal installeres i eksplosionstruede omgivelser, skal installationsanvisningerne i brugsanvisningen følges. Hvis der i denne forbindelse opstår sproglige problemer, bedes De henvende Dem til produktionsfirmaet, som så vil sørge for, at De modtager en oversættelse af den relevante artikel på Deres sprog.



Poznámka k instalaci měřicích řetězců v prostředí s nebezpečím výbuchu.

Když má být měřicí řetězec (sestávající z čidla a konvertoru) instalován v prostředí s nebezpečím výbuchu, tak je třeba respektovat instalační pokyny, které jsou součástí návodu k upotřebení. Kdyby při tom došlo k jazykovým potížím, tak prosíme kontaktujte výrobní firmu, která Vám relevantní článek zašle v jazyku krajiny použití.



Piezīme par mērīšanas ķēžu instalēšanu sprādziena bīstamās zonās.

Ja mērīšanas ķēde jāuzstāda sprādzienbīstamā zonâ, ir jāievēro lietošanas instrukcijā dotie instalēšanas norādījumi. Ja rodas kādas valodas grūtības, lūdzu griezieties pie izgatavotāja firmas, kas Jums nosūtīs nozīmīgâko nodaļu tulkojumus lietotāja valsts valodā.

Emerson
epro GmbH
Jöbkesweg 3
48599 Gronau
Germany
T +49 2562 709 0
F +49 2562 709 401
www.Emerson.com

Contents

Chapter 1 General 8
1.1 Using this manual 8
1.2 Symbols 9
1.3 Liability and guarantee 9
1.4 Incoming goods inspection 9
1.5 Technical support 10
1.6 Storage and transport 10
1.7 Disposal of the device 11
1.8 China RoHS Compliance 11
1.9 CCC Certification – AMS EZ 1000 11
1.10 Installation awareness 12

Chapter 2 Safety instructions 13
2.1 Using the device 13
2.2 Owner's responsibility 13
2.3 Radio interference 14
2.4 ESD safety 14

Chapter 3 Application and design 15
3.1 Application 15
3.2 Design 15

Chapter 4 Function principle 18
4.1 Sensor supervision 19

Chapter 5 Installation and commissioning 21
5.1 CSA - General safety 21
5.2 Mounting 21
5.2.1 Installing an AMS EZ 1000 Converter using the optional DIN Rail for Horizontal Mount adapter 22
5.3 Hints for installation and connection 27
5.3.1 Connections and wiring 28
5.4 Adjustment of measuring chains at the machine 36
5.4.1 General connection 36
5.4.2 Sensors EZ105x-xx-xx-xxx, EZ108x-xx-xx-xxx, PR 6424/0xx-xx0, and PR 6425/010-1x0 36
5.4.3 Sensor PR 6426/0x0-xx0 38
5.5 Mutual influences of two measuring chains 39

Chapter 6 Hazardous location installation 41
6.1 General installation requirements 41
6.2 Installation requirements – intrinsic safe 42
6.3 Installation requirements – increased safety 43
6.4 Installation of the sensors 45

6.5 CSA – Special conditions of safe use ... 45
6.6 Technical data, explosion protection ... 45
6.7 Control drawings ... 50
6.8 Revision history ... 53

Chapter 7 Hazardous location installation – application notes ... 54
7.1 Mark the converter as "once used without safety barrier" ... 54
7.2 AMS EZ 1000 Converter with AMS 6500 ... 55
7.3 AMS EZ 1000 Converter with Ex isolation transducers and Zener barriers ... 56
7.3.1 AMS EZ 1000 Converter with Zener barriers ... 58

Chapter 8 Configuration ... 61
8.1 General configuration procedure ... 61
8.1.1 Offline configuration overview ... 61
8.1.2 Online configuration overview ... 62
8.2 Start of an offline configuration ... 63
8.3 Start of an online configuration ... 65
8.4 Configuration of an already existing converter ... 66
8.5 Configuration editor and parameters ... 66
8.5.1 Ribbon command bar ... 67
8.5.2 Basic ... 71
8.5.3 Input ... 72
8.5.4 Measurement ... 73
8.5.5 Calibration ... 74
8.6 Send and Reload a configuration ... 84
8.6.1 Send a configuration ... 84
8.6.2 Reload a configuration ... 85
8.7 Offline (Easy) calibration ... 85
8.8 Components database – add a new target material ... 87

Chapter 9 Online View ... 89
9.1 Overview ... 90
9.2 Details ... 92
9.3 Live data ... 96
9.4 Online commands ... 98

Chapter 10 Maintenance, fault finding, and repair ... 100
10.1 Maintenance ... 100
10.2 Hints for fault finding ... 100
10.3 Replace an AMS EZ 1000 Converter ... 101
10.4 Replace a sensor ... 102
10.5 Linearity check ... 103
10.6 Firmware update ... 104
10.7 Reset to factory default ... 106

Chapter 11 Technical data 108
11.1 Input 108
11.2 Supply 108
11.3 Output 108
11.4 Errors and tolerances 109
11.4.1 EZ1900-ADAP-90 adapter 111
11.4.2 AMS EZ 1000 Converter with EZ105x 111
11.4.3 AMS EZ 1000 Converter with EZ108x 112
11.4.4 AMS EZ 1000 Converter with PR 6424 114
11.4.5 AMS EZ 1000 Converter with PR 6425 116
11.4.6 AMS EZ 1000 Converter with PR 6426 117
11.5 Environmental conditions and mechanical design 118
Chapter 12 Certificates 119
Index 122

1 General

1.1 Using this manual

This manual contains information concerning the use of the device.

Read the operating manual completely prior to starting installation and operating the device. Comply with all safety instructions.

This operating manual applies for all variants of the AMS EZ 1000 Converter with a hardware revision listed in Table 1-1 and for AMS Machine Studio 4.x. See type plate for hardware revision.

Table 1-1: Hardware revision of the AMS EZ 1000 Converter variants

Variant	Hardware revision	Serial number	Remarks
EZ1000	≥ 22	≥ P2540xxxxx	
EZ1000-EX	≥ 18	< P2540xxxxx	
EZ1000-SIS	≥ 20	≥ P2540xxxxx	Safety-related
EZ1000-SIS-EX	≥ 18	< P2540xxxxx	

Table 1-2 shows which sensors are supported from which firmware version.

Table 1-2: AMS EZ 1000 Converter firmware versions and supported sensors

Firmware version	Supported sensors
1.0.0 and higher	EZ105x-xx-xx-xxx, EZ108x-xx-xx-xxx, and BN 33010x-xx-xx-yy[1]-xx-xx
1.0.6 and higher	PR 6424/0xx-xx0, PR 6425/010-1x0, and PR 6426/0x0-xx0

1 *yy: 10, 50, or 90*

Include the operating manual when transferring the device to third parties.

Note
When requesting technical support, indicate type and serial number from the type plate.

Table 1-3 shows a list of documents that are referred to in this operating manual.

Table 1-3: Referenced documents

MHM-97879	Operating Manual Machine Studio - General Functions
MHM-97883	Installation Guide AMS EZ 1000 Sensor
MHM-97887	Safety Manual AMS EZ 1000 Converter and Sensor

⚠ DANGER

Hazardous location installation and Hazardous location installation – application notes are only valid for the variants of the AMS EZ 1000 Converter labeled as an Ex ia or Ex ec device.

1.2 Symbols

Note
This symbol marks passages that contain important information.

⚠ CAUTION

This symbol marks operations that can lead to malfunctions, faulty measurements, or data loss, but will not damage the device.

⚠ DANGER

A danger indicates actions that can lead to property damage or personal injury.

	According to IEC 61010, this symbol means that this device must be operated with DC voltage.
	According to IEC 61010, this symbol means that the documentation of the device must completely be read and understood before installing and commissioning of the device. Observe all safety related instructions in this document.

1.3 Liability and guarantee

Emerson is not liable for damages that occur due to improper use. Proper use also includes the knowledge of, and compliance with, this document.

Customer changes to the device that have not been expressly approved by Emerson will result in the loss of guarantee.

Due to continuous research and further development, Emerson reserves the right to change technical specifications without notice.

1.4 Incoming goods inspection

Check the content of the shipment to ensure that it is complete; visibly inspect the goods to determine if the device has been damaged during transport. The following parts are included in the scope of delivery and must be contained in the shipment.

- AMS EZ 1000 Converter
- Quick Start Guide

Optional EZ 1000 Mounting Adapter DIN Rail for Horizontal Mount (MHM-9199-00142)

Contained in the shipment of the EZ 1000 Mounting Adapter DIN Rail for Horizontal Mount:

- Mounting rail adapter
- End clamp
- 4x Hexagon socket head cap screw M4x5
- 2x washer for M4 screws
- Base plate
- Mounting rail

If the contents is incomplete, or if you observe any defects, file a complaint with the carrier immediately. Inform the responsible Emerson sales organization so your device can be replaced. In this case, attach a tag with customer name and the observed defect.

1.5 Technical support

You may need to ship this product for return, replacement, or repair to an Emerson Product Service Center. Before shipping this product, contact Emerson Product Support to obtain a Return Materials Authorization (RMA) number and receive additional instructions.

Product Support

Emerson provides a variety of ways to reach your Product Support team to get the answers you need when you need them:

Phone	Toll free 1 800 833 8314 (U.S. and Canada) +1 512 832 3774 (Latin America) +63 2 8702 1111 (Asia Pacific, Europe, and Middle East)
Email	Guardian.GSC@Emerson.com
Web	http://www.emerson.com/en-us/contact-us

To search for documentation, visit http://www.emerson.com.

To view toll free numbers for specific countries, visit

http://www.emerson.com/technicalsupport.

Note
If the equipment has been exposed to a hazardous substance, a Material Safety Data Sheet (MSDS) must be included with the materials returned. An MSDS is required by law to be available to people exposed to specific hazardous substances.

1.6 Storage and transport

Store and transport the device only in its original packaging. Technical data specifies the environmental conditions for storage and transport.

1.7 Disposal of the device

Provided that no repurchase or disposal agreement exists, recycle the following components at appropriate facilities:

- Recyclable metal
- Plastic elements

Sort the remaining components for disposal, based on their condition. National laws or provisions on waste disposal and protection of the environment apply.

Note
Environmental hazards! Electrical waste and electronic components are subject to treatment as special waste and may only be disposed by approved specialized companies.

1.8 China RoHS Compliance

Our products manufactured later than June 30, 2016, and those which are sold in the People's Republic of China are marked with one of the following two logos to indicate the Environmental Friendly Use Period in which it can be used safely under normal operating conditions.

Products that do not have the following marking were either manufactured before June 30, 2016, or are not electrical equipment products (EEP).



Circling arrow symbol with "e": The product contains no hazardous substances over the Maximum Concentration Value and it has an indefinite Environmental Friendly Use Period.



Circling arrow symbol with a number: This product contains certain hazardous substances over the Maximum Concentration Value and it can be used safely under normal operating conditions for the number of years indicated in the symbol. The names and contents of hazardous substances can be found in chapter "Certificates".

1.9 CCC Certification – AMS EZ 1000

With the announcement of the Chinese market regulation authority SAMR (State Administration for Market Regulation), a Compulsory Product Certification (CCC certification) is mandatory for many explosion protection products. This explosion proof (“Ex”) product complies to the CCC obligation and is certified (certification number: 2023322315005261).



This China Compulsory Certificate mark (CCC), is a compulsory safety mark for many products imported, sold, or used in the Chinese market and indicates that the product is certified in accordance to GB/T 3836.1-2021, GB/T 3836.3-2021, and GB/T 3836.4-2021. If the product label is to small to contain the CCC certification mark it is sufficient to have the mark printed on the minimum package and in the attached document.

1.10 Installation awareness

Note

When planning a measurement, follow these guidelines:

- Consider environmental conditions which might have an influence on the measurement such as temperature, humidity, substances aggressive to the sensor, pressure, and pollution.
- Always use a stiff and vibration-free sensor holder.
- Define a suitable measuring range, not larger than necessary, in consultation with the operator of the plant.
- Define the trip limit in consultation with the operator of the plant.
- Take measurement deviations into account when defining trip limits.
- Use a sensor that meets the requirements of the defined measuring range.
- Ensure an EMC-compatible installation including the use of proper cables.
- Ensure proper function of the measurement before activating the measurement in the production environment.

2 Safety instructions

To ensure safe operation, carefully follow all the instructions in this manual.

The correct and safe use of this device requires that both operating and service personnel understand and comply with general safety guidelines and observe the special safety comments listed in this manual. Where necessary, safety-sensitive points on the device are marked.

⚠ DANGER

Because the device is electrical equipment, only specially trained and authorized personnel may commission, service, and maintain this equipment.

2.1 Using the device

Install and use the device as specified in this manual.

If the device is used in a manner not specified by the manufacturer, the protection provided by the device may be impaired.

2.2 Owner's responsibility

If there is a reason to suspect that hazard-free operation, and thus, adequate machine protection is no longer possible, take the device out of operation and safeguard it from unintentional operation. This is the case:

- if the device shows visible damage.
- if the device no longer works.
- after any kind of overload that has exceeded the permissible limits (such as those detailed in chapter "Technical data," section "Environmental conditions").

⚠ DANGER

If device tests have to be completed during operation or if the device has to be replaced or decommissioned, it will impair the machine protection and may cause the machine to shut down. Make sure to place the machine into a safe state before deactivating machine protection and starting such work, and to validate the operation of the device prior to placing it back into operation and reactivating machine protection after work has been completed.

Related information

Technical data

2.3 Radio interference

The device is carefully shielded and tested to be technically immune to radio interference and complies with current standards. However, if you operate this device together with other peripheral devices that are not properly shielded against radio interference, disturbances and radio interferences may occur.

2.4 ESD safety

⚠ DANGER

Internal components can be damaged or destroyed due to electrostatic discharge (ESD) during the handling of the device.

Take suitable precautions before handling the device to prevent electrostatic discharges through the electronics. Such measures might include, for example, wearing an ESD bracelet. Transport and storage of electronic components may only be made in ESD-safe packaging.

Handle the device with particular care during dry meteorological conditions with relative humidity below 30% as electrostatic discharges can occur more frequently.

3 Application and design

3.1 Application

The AMS EZ 1000 Converter is a signal converter for different types of eddy current sensors. The converter is designed for the connection of eddy current sensors of the AMS EZ 1000 Sensor series, the listed types of the PR 642x series, and a selection of third party sensors:

- EZ105x-xx-xx-xxx and EZ108x-xx-xx-xxx
- PR 6424/0xx-xx0, PR 6425/010-1x0, and PR 6426/0x0-xx0
  The sensor adapter EZ1900-003-ADAP-1 is required for the connection of these sensors.
- Bently Nevada™ 3300 XL 8 mm Proximity Probe types:
  - 33010x-xx-xx-10-xx-xx with extension cables 330130-040-xx-xx or 330130-080-xx-xx
  - 33010x-xx-xx-50-xx-xx
  - 33010x-xx-xx-90-xx-xx

  The sensor adapter EZ1900-003-ADAP-2 is required for the connection of 33010x probes.

The AMS EZ 1000 Converter, in combination with eddy current sensors listed above, can be used for static and dynamic distance measurements at a variety of different rotating machinery. This means that slow axial displacements and fast radial vibrations of rotating machines can be measured. By using pulse wheels or key marks stuck on the shaft, the speed of the machine can be measured and key pulses generated.

The AMS EZ 1000 Converter is integrated into AMS Machine Studio which allows an easy on-site calibration of the converter to the sensor. AMS Machine Studio also provides the opportunity of detuning the converter if sensors are fitted closely together or to extend the standard measuring range of several sensors.

Supply circuits for the eddy current sensor and the measuring electronic are contained in the converter. The nominal supply voltage for the converter is -24 V DC, the nominal range of the output signal, proportional to the nominal measuring range of the sensor, is -2 to -18 V.

3.2 Design

The AMS EZ 1000 Converter is designed for DIN rail mounting within a field housing or cabinet. The connection of converter supply and sensor signal is made by screw terminals. The converter is equipped with a LEMO connector for connection of an eddy current sensor. The USB 2.0 Micro-B socket is the interface for the configuration. Figure 3-1 explains the connections and operating elements.

Figure 3-1: AMS EZ 1000 Converter

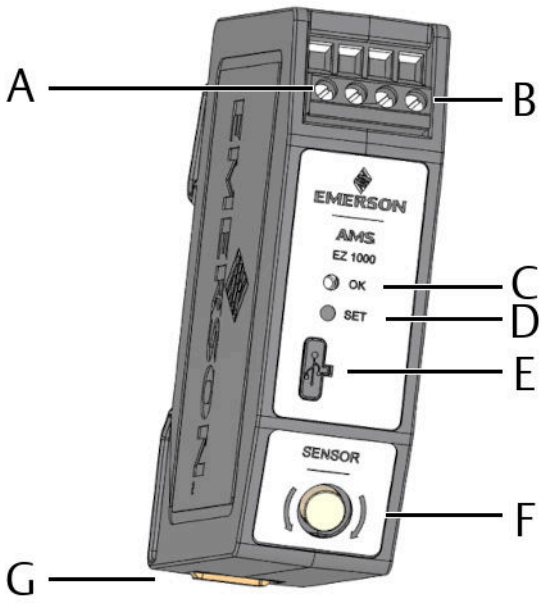

A. *Two screw terminals for -24 V DC supply voltage.*
B. *Two screw terminals for sensor output signal (range: -2 V to -18 V)*
C. *Green Channel OK LED (see Table 3-1)*
D. *Button for offline calibration (Easy calibration) without AMS Machine Studio and for Firmware update*
E. *Configuration interface (USB 2.0 Micro-B socket with cover)*
F. *Sensor socket with external thread for sensor connection*
G. *Build-in spring DIN rail clip*

Table 3-1: LED blinking pattern

Event	Blinking pattern	Sequence[1]
Normal operation	Steady green light	
Offline (Easy) calibration	Slow flashing (1 Hz) for approximately 5 seconds; request of calibration – before measurement	1 Second
	Double flashing (1 Hz) for approximately 5 seconds during measurement (see Offline (Easy) calibration for details)	1 Second
Offline (Easy) calibration – failure detected	Unlimited fast flashing (5 Hz) – until power off/on the converter	1 Second
Automatic calibration with AMS Machine Studio	Slow flashing (1 Hz) for approximately 5 seconds; request of calibration – before measurement	1 Second

Table 3-1: LED blinking pattern *(continued)*

Event	Blinking pattern	Sequence[1]
	Double flashing (1 Hz) for approximately 5 seconds during measurement	
Automatic calibration with AMS Machine Studio – failure detected	Unlimited fast flashing (5 Hz) – until power off/on the converter	
Firmware update	Slow flashing (1 Hz) while waiting for button press	
	Steady light while erasing and writing the firmware	
Sensor error	LED off	
Sensor is too close to the measuring object		
Converter error		
No power supply		
Factory default	Continuously triple flashing	
Factory calibrated	Slow flashing (1 Hz) for approximately 3 seconds after power on the converter	

1 = *on* / = *off*

4 Function principle

The measuring coil of the eddy current sensor (for example EZ105x-xx-xx-xxx or EZ108x-xx-xx-xxx) is connected to an oscillator circuit in the converter through a shielded connection cable.

The oscillator circuit generates a high-frequency signal resulting in a high-frequency magnetic field around the tip of the eddy current probe. If this magnetic field meets a metallic target, it induces high-frequency currents and another magnetic field which is inversely induced to the original one. According to the rule of Lenz, the induced current damps the oscillator signal.

The damping factor depends on the distance between sensor tip and target material. The smaller the distance to the sensor, the smaller the amplitude of the oscillator.

The demodulator at the output of the oscillator generates a distance proportional signal from the amplitude modulated HF-signal. The following units serve the purpose of linearization and amplification of the signal. The output connectors OUT and GND provide a signal proportional to the actual distance between sensor tip and target material (measurement object).

Figure 4-1: Block diagram

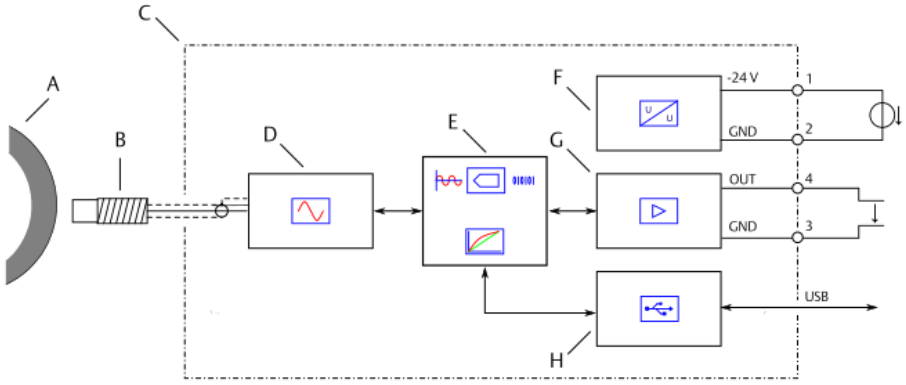

A. Metallic target (for example: machine shaft)
B. Sensor
C. AMS EZ 1000 Converter
D. Oscillator
E. Micro controller for signal processing
F. Power supply
G. Signal output
H. USB interface

The target material, the sensor, and the sensor cable length have an influence on the oscillator circuit and consequently on the output signal. The AMS EZ 1000 Converter must be calibrated on the connected sensor, the sensor cable length, and the material of the target to reduce this influence. Sensor, sensor cable, and calibrated AMS EZ 1000 Converter form the measuring chain.

Note
If installing a calibrated measuring chain at a different measuring point, ensure that the target material of this point is the same as of the previous point. Otherwise, recalibrate the converter on the new target material.

4.1 Sensor supervision

The AMS EZ 1000 Converter checks the connected sensor by supervising the signal voltage. A sensor not OK indication is displayed when the sensor OK limit of -1.5 V has been violated.

Figure 4-2: Diagram sensor supervision

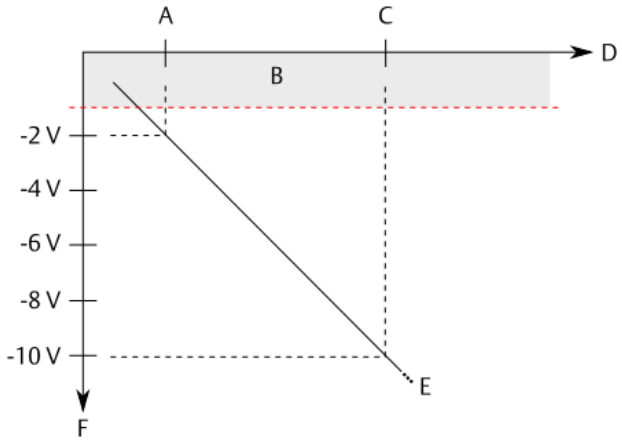

A. Beginning of the measuring range (smallest distance to measuring object)
B. Sensor not OK area. Limit: -1.5 V
C. Mid of measuring range
D. Distance between sensor and measuring object
E. Voltage output curve (-2 to -18 V)
F. Output voltage

Sensor not OK indication:

- Green LED on the converter front is switched off (see Table 3-1).
  The green LED is used for sensor, voltage, and converter fault indication.
- Sensor state in the online view of AMS Machine Studio indicates a fault (see Overview).

Table 4-1 lists causes for a sensor not OK indication.

Table 4-1: Causes for sensor not OK indication

Cause	Possible reasons	Solution
Sensor is too close to the measuring object.	Machine behavior has been changed.	Check the distance and readjust the sensor position if necessary.
	Loosened sensor holder.	

Table 4-1: Causes for sensor not OK indication *(continued)*

Cause	Possible reasons	Solution
Sensor cable break	Open connector.	Check the sensor cable and connections. Replace a defective sensor. Check cable path to avoid further damages.
	Damaged sensor cable.	
Sensor tip damage	Permissible environmental temperature has been considerably exceeded.	Replace the defective sensor. Check sensor adjustment and environmental condition to avoid further damages.
	Sensor tip has touched the measuring object.	

The sensor not OK indication is reset as soon as the voltage is below the limit again.

5 Installation and commissioning

5.1 CSA - General safety

Equipment to be installed within another enclosure which provides the safety aspects and protects the operator from hazards and is suitable for outdoor environment conditions.

5.2 Mounting

Mount the AMS EZ 1000 Converter into a suitable housing that contains a mounting rail of type NS 35/7.5. The minimum space on the DIN rail is equal to the converter width of 26 mm. The minimum mounting space for the AMS EZ 1000 Converter within a housing is shown in Figure 5-1.

Note
Ensure that there is no heated surface beneath the converter.

Figure 5-1: Minimum required mounting space

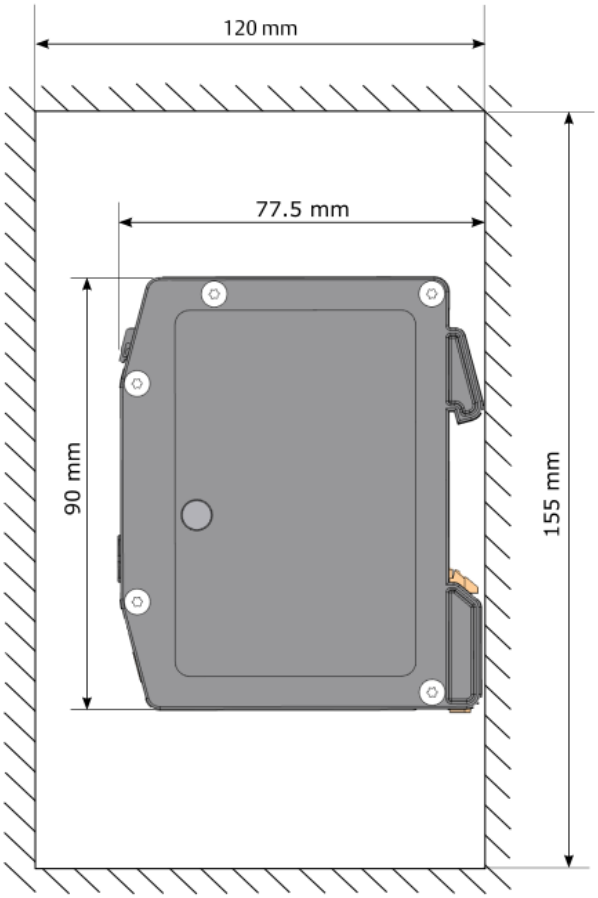

Snap the AMS EZ 1000 Converter onto the DIN rail as shown in Figure 5-2.

Figure 5-2: DIN rail mounting

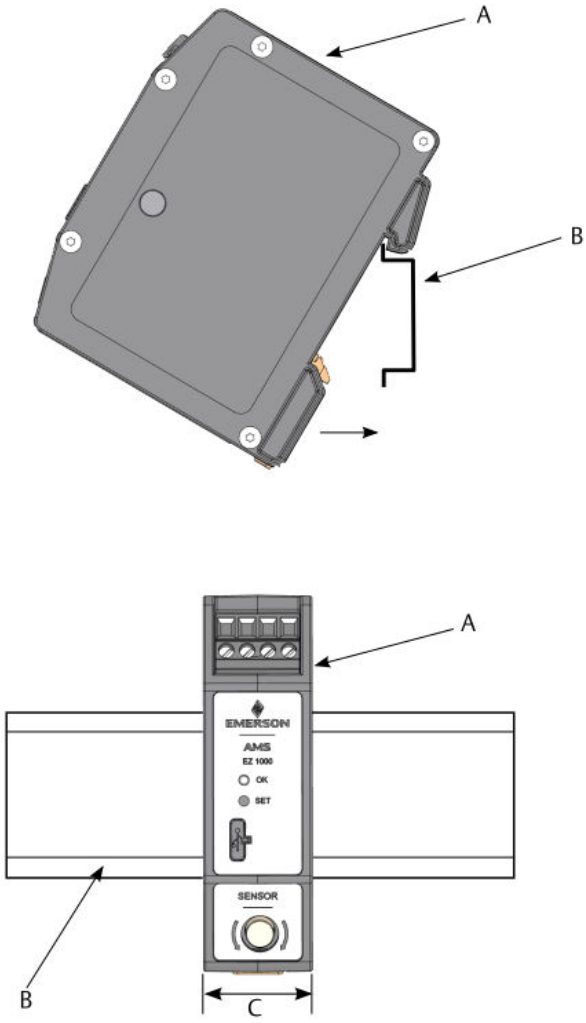

A. *AMS EZ 1000 Converter*
B. *DIN rail type NS 35/7.5*
C. *Minimum required space on DIN rail: 26 mm*

5.2.1 Installing an AMS EZ 1000 Converter using the optional DIN Rail for Horizontal Mount adapter

Use the EZ 1000 Mounting Adapter DIN Rail for Horizontal Mount to install up to two AMS EZ 1000 Converters in a housing already equipped with a mounting rail but with limited space in depth. Execute the following steps to assemble the DIN Rail for Horizontal Mount adapter and to mount the AMS EZ 1000 Converters.

Figure 5-3 describes the parts of the optional DIN Rail for Horizontal Mount adapter.

Figure 5-3: Parts DIN Rail for Horizontal Mount adapter

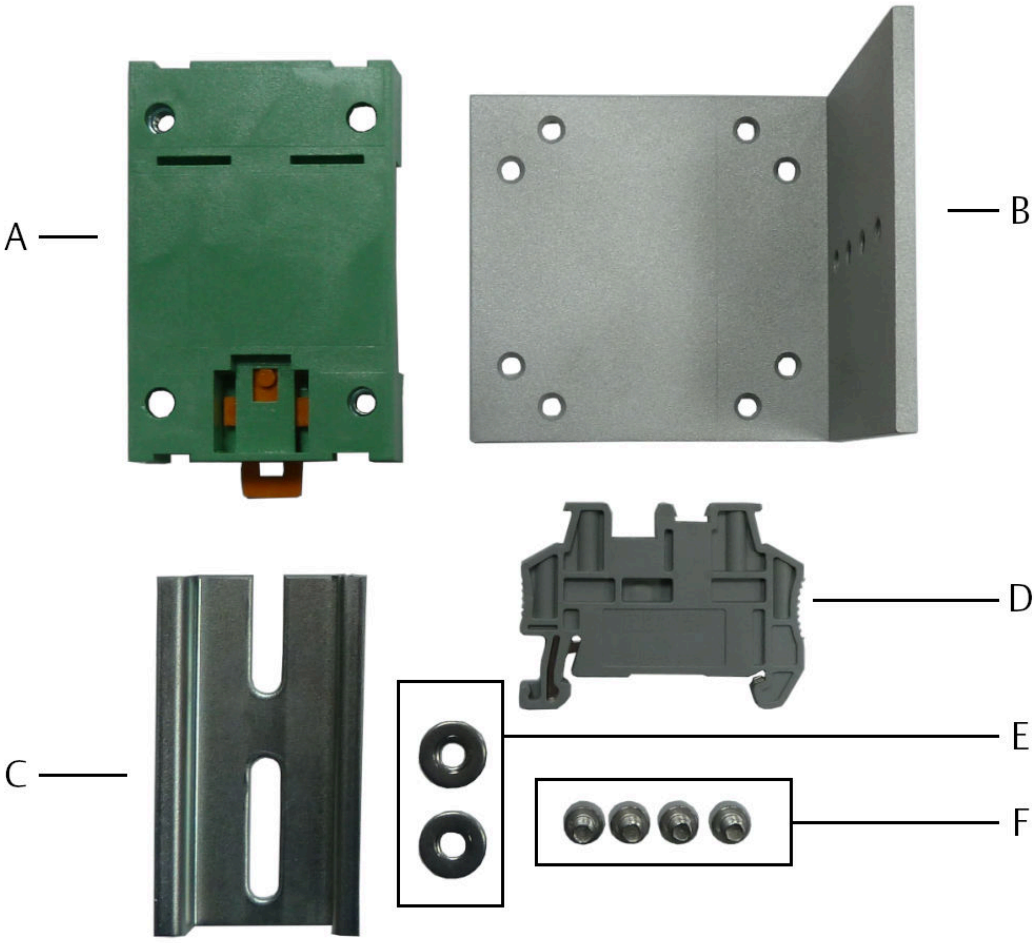

A. Mounting rail adapter
B. Base plate
C. Mounting rail
D. End clamp
E. 2x washer for M4 screws
F. 4x Hexagon socket head cap screw M4x5

Prerequisites

1. Hexagon socket wrench, size 4 mm
2. Suitable tool such as a flat-tip screwdriver to unlock the mounting rail adapter (Only necessary when the adapter must be removed from the mounting rail.)

Procedure

1. Mount the base plate on the mounting rail adapter. There are three possible alignments of the base plate (see Figure 5-4). Position the base plate on the

mounting rail adapter in accordance to the desired alignment of the AMS EZ 1000 Converter.

Figure 5-4: Possible base plate alignments

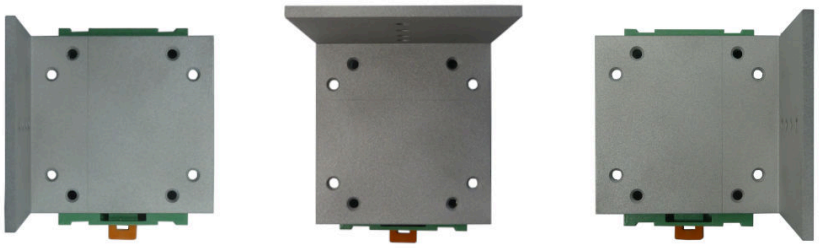

Turn the mounting rail adapter with the positioned base plate upside down. The mounting rail adapter has four holes – two with an inserted nut and two without nut. Fix the base plate on the mounting rail adapter by inserting the M4x5 screws into the holes without nut and screwing them into the threaded holes of the base plate. See Figure 5-5. Figure 5-6 shows the top view of the fixed base plate.

Figure 5-5: Mounting rail adapter with base plate – bottom view

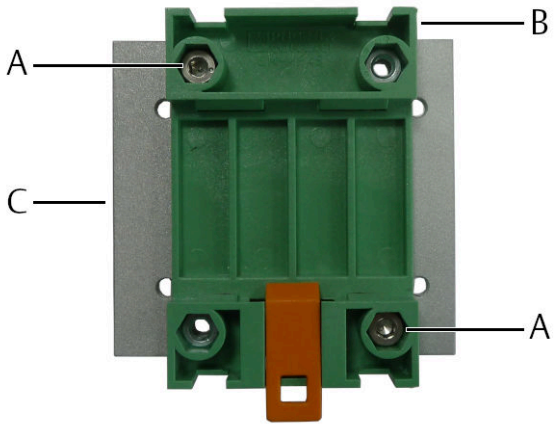

A. Hexagon socket head cap screw M4x5
B. Mounting rail adapter
C. Base plate

Figure 5-6: Mounting rail adapter with base plate – top view

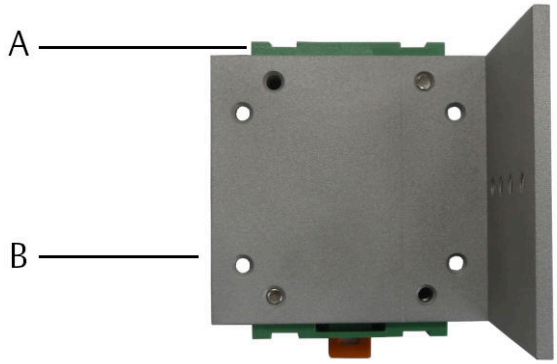

A. Mounting rail adapter
B. Base plate

2. Mount the mounting rail on the base plate by using two M4x5 screws and two washers as shown in Figure 5-7.

Figure 5-7: Base plate with mounting rail

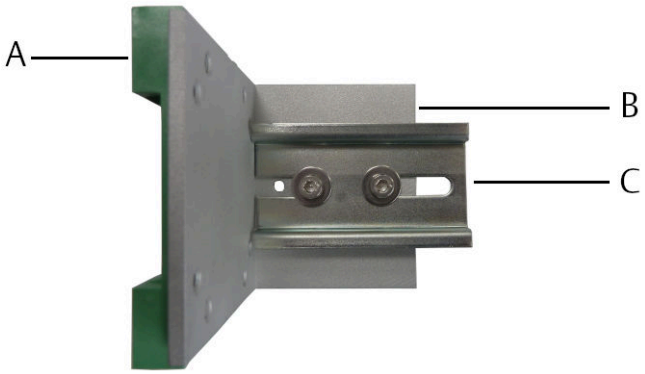

A. Mounting rail adapter
B. Base plate
C. Mounting rail

3. Snap one or two AMS EZ 1000 Converters on the mounting rail as described in Mounting.

Figure 5-8: Adapter with AMS EZ 1000 Converter

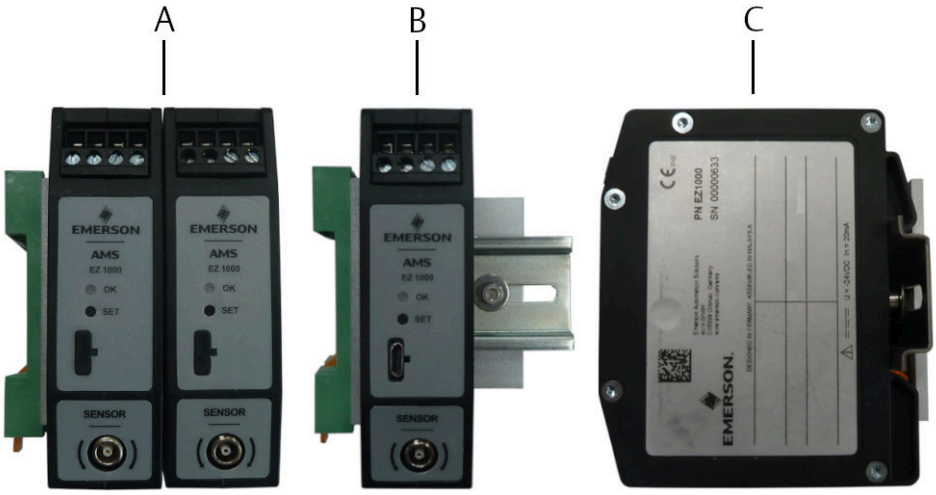

A. Adapter with two AMS EZ 1000 Converters – side view
B. Adapter with one AMS EZ 1000 Converter – side view
C. Adapter with AMS EZ 1000 Converter – front view

4. Snap the end clamp on the mounting rail to secure the AMS EZ 1000 Converter. See Figure 5-9.

Figure 5-9: AMS EZ 1000 Converter secured with end clamp

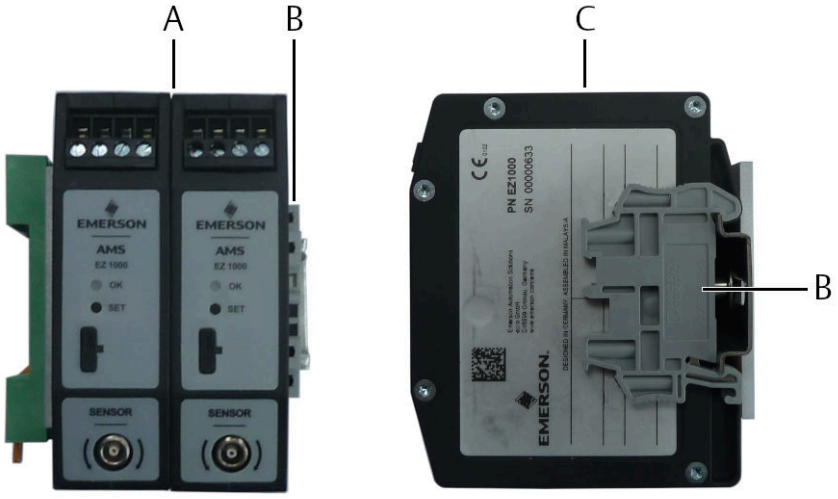

a. Adapter with two AMS EZ 1000 Converters – side view
b. End clamp
c. Adapter with two AMS EZ 1000 Converters – front view

5. Snap the DIN Rail for Horizontal Mount adapter including the AMS EZ 1000 Converter(s) on a mounting rail of type NS 35/7.5 mounted in a suitable housing. See Figure 5-1 for the minimum required mounting space.

Figure 5-10: DIN Rail for Horizontal Mount with AMS EZ 1000 Converter snapped on a mounting rail

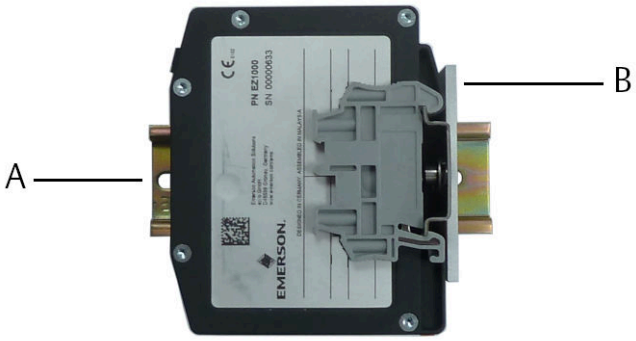

A. Mounting rail, type NS 35/7.5
B. DIN Rail for Horizontal Mount adapter including AMS EZ 1000 Converter(s)

5.3 Hints for installation and connection

To ensure the electromagnetic compatibility of the eddy current measuring chain, Emerson recommends using a double shielded twisted pair cable for connecting the AMS EZ 1000 Converter to the measuring amplifier, for example to an A6500-UM Universal Measurement Card of the AMS 6500 ATG system. For direct connections to the converter, LiYCY-CY 2x2x0.25 mm² or equivalent cables are preferred. Master connection cable may be any multicore cable with a corresponding cable structure. Emerson recommends connecting the outer cable shield to protective earth/measuring ground close to the measuring amplifier directly at the cable inlet of the control cubicle. Moreover, connect the outer cable shield to protective earth as often as possible, for example, at every intermediate distribution frame or cable gland.

A higher electromagnetic compatibility can be achieved by connecting the cable shield to protective ground at either end of the cable – provided that no ground loop current (equalizing current) occurs.

The maximum cable length, for installation in non-hazardous locations, between an converter and a measuring amplifier, such as an A6500-UM card, depends on the electrical properties of the used cable. Figure 5-11 explains the influence of the used cable on the output signal of the converter. The signal frequency has the most significant influence on the maximum cable length. The higher the signal frequency and the longer the cable, the higher the signal damping.

Figure 5-11: Cable influence on the converter output signal

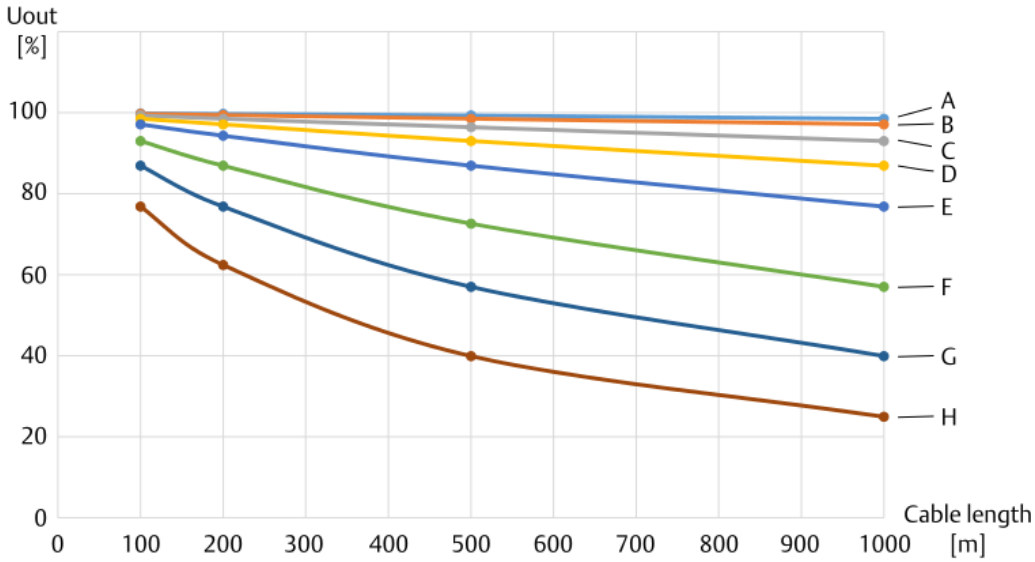

Cable capacity 120 nF/km (wire/wire); signal frequency:

A. 100 Hz
B. 200 Hz
C. 500 Hz
D. 1000 Hz
E. 2000 Hz
F. 5000 Hz
G. 10000 Hz
H. 20000 Hz

Example: At a signal frequency of 1000 Hz and a cable length of 1000 m, the converter output voltage is reduced by approximately 13%.

The accuracy of the calculated U_{out} values is ±10%.

- Install measuring cables according to general standards for measuring and control cables.
- If possible, install cables in metallic cable channels or tubes.
- Observe that the measuring cables are arranged orthogonally considering the permissible bending radius.

5.3.1 Connections and wiring

The AMS EZ 1000 Converter is equipped with four screw terminals for power supply connection and output signal connection, and a LEMO socket for the connection of one eddy current sensor. See Table 5-1 for the minimum and maximum permissible wire cross-section of the screw terminals.

Table 5-1: Permissible wire cross-section

Wire description	Wire cross-section	
	Minimum	Maximum
Conductor cross section solid	0.34 mm²	2.5 mm²
Conductor cross section flexible	0.2 mm²	2.5 mm²
Conductor cross section flexible, with ferrule without plastic sleeve	0.25 mm²	2.5 mm²
Conductor cross section flexible, with ferrule with plastic sleeve	0.25 mm²	2.5 mm²
Conductor cross section AWG	24	12
2 conductors with same cross section, solid	0.2 mm²	1 mm²
2 conductors with same cross section, stranded	0.2 mm²	1.5 mm²
2 conductors with same cross section, stranded, ferrules without plastic sleeve	0.25 mm	1 mm²
2 conductors with same cross section, stranded, TWIN ferrules with plastic sleeve	0.5 mm²	1.5 mm²
AWG according to UL/CUL	30	12

The required wire stripping length is 10 mm.

Power supply and output signal connection

The AMS EZ 1000 Converter requires a -24 V DC power supply and is typically supplied by the used measuring amplifiers such as an A6500-UM Universal Measurement Card. Usage of a suitable external power supply is also possible.

If using an external power supply, ensure that it is a Class 2 power supply or a Limited Energy source in accordance to CSA 61010-1-12.

Figure 5-12 exemplifies the connection of an AMS EZ 1000 Converter. The shown grounding concept is one possibility. Adapt the grounding concept to the on-site requirements.

Figure 5-12: Connection example

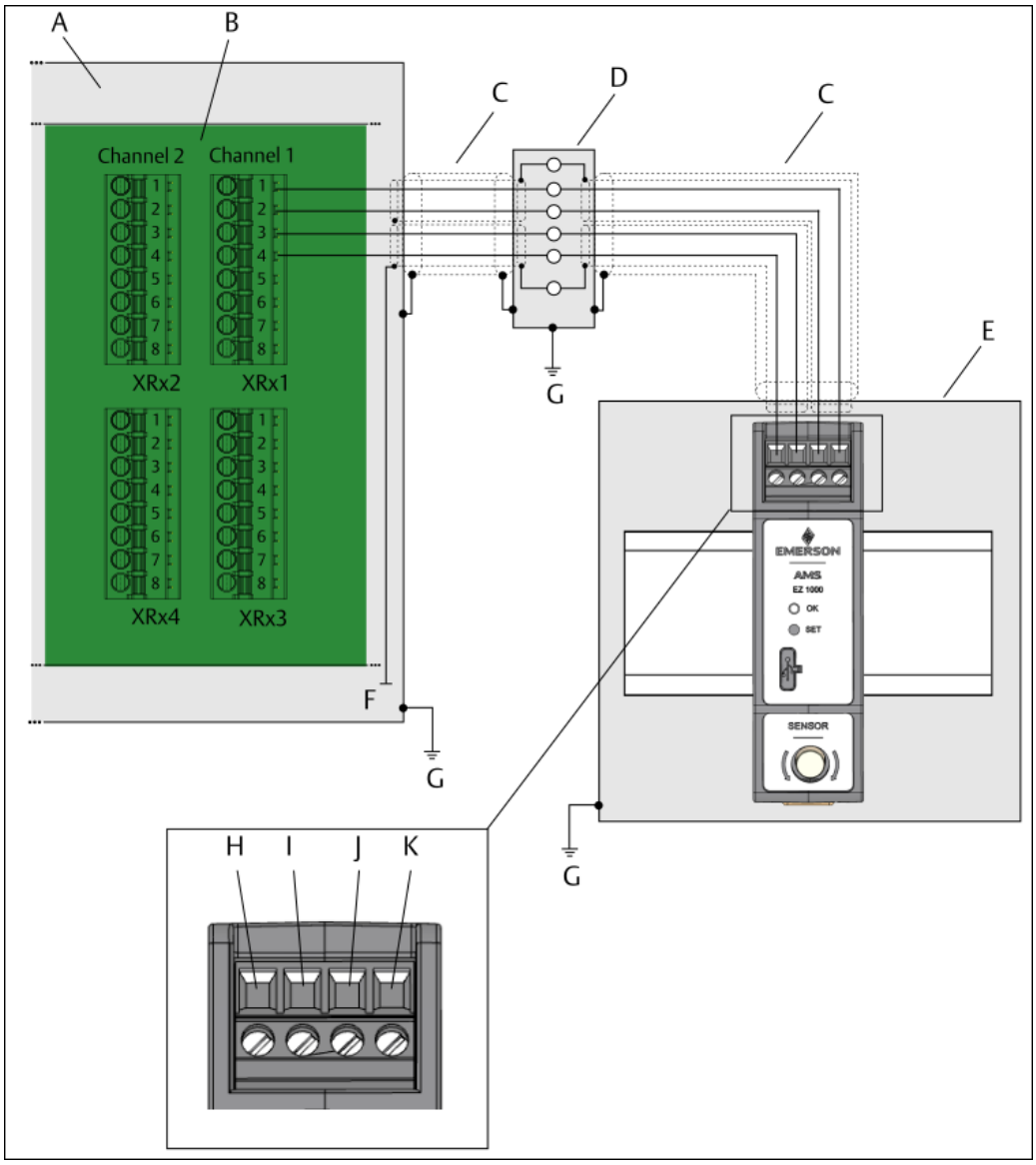

A. Cabinet
B. Rear view of a slot of an AMS 6500 ATG backplane (x = slot number).
C. Double shielded and twisted pair cable, for example LiYCY-CY 2x2x0.25mm²
D. Junction box
E. Field housing with AMS EZ 1000 Converter
F. Shield earth
G. Protection earth
H. Screw terminal for power supply: -24 V
I. Screw terminal for power supply: ⊥ (GND)
J. Screw terminal for output signal: ⊥ (GND)
K. Screw terminal for output signal: Out

3-wire connection

Because of the higher immunity to external influences on the sensor signal the recommended connection type is the 4-wire connection as described in Power supply and output signal connection. If it is not possible to use the 4-wire connection, the AMS EZ 1000 Converter can also be connected by using three wires because of the internal interconnection of the GND terminals for power supply and output signal.

Figure 5-13 exemplifies the 3-wire connection of an AMS EZ 1000 Converter. The shown grounding concept is one possibility. Adapt the grounding concept to the on-site requirements.

Figure 5-13: 3-wire connection example

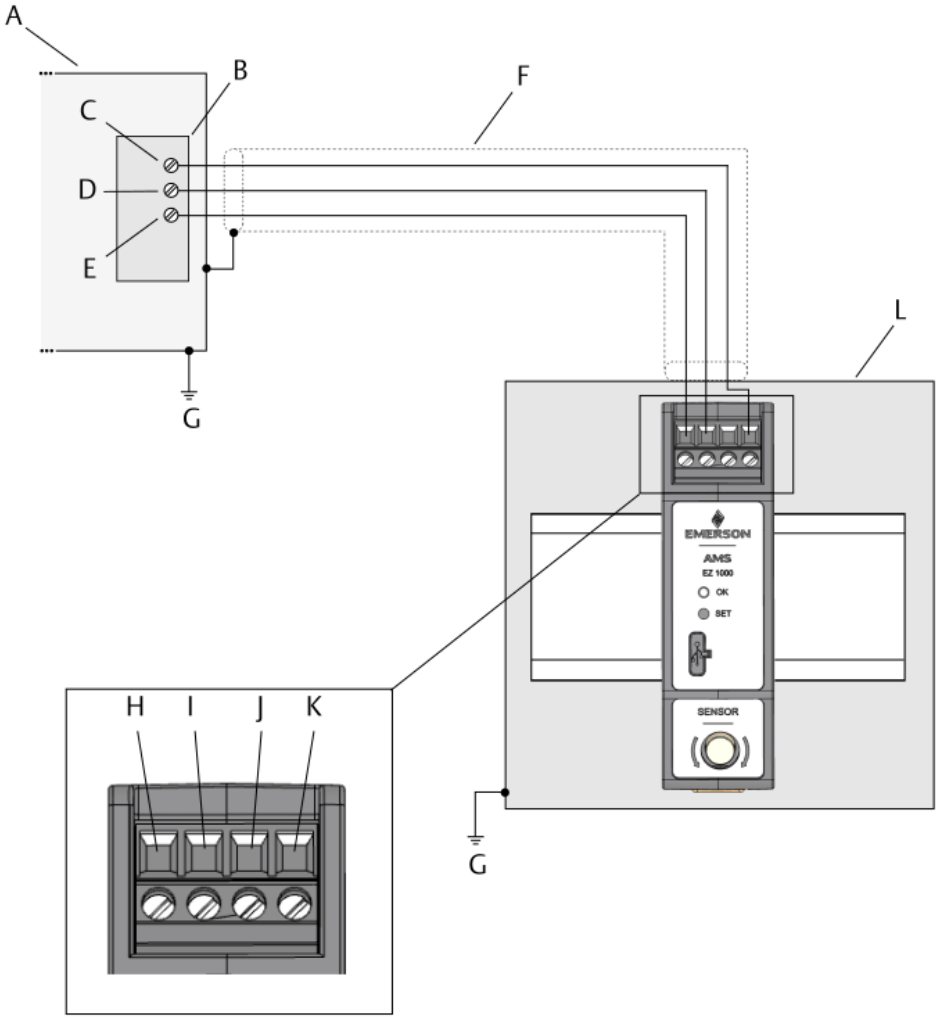

A. Cabinet
B. Device with three connection terminals
C. Signal input
D. ⊥ (GND)
E. -24 V DC power supply
F. Shielded connection cable
G. Protection earth
H. Screw terminal for power supply: -24 V
I. Screw terminal for power supply: ⊥ (GND)
J. Screw terminal for output signal: ⊥ (GND)
K. Screw terminal for output signal: Out
L. Field housing with AMS EZ 1000 Converter

Sensor connection

The following sensor types can be connected.

- EZ105x-xx-xx-xxx and EZ108x-xx-xx-xxx
- PR 6424/0xx-xx0, PR 6425/010-1x0, and PR 6426/0x0-xx0
  The sensor adapter EZ1900-003-ADAP-1 is required for the connection of these sensors.

Figure 5-14: Sensor adapter EZ1900-003-ADAP-1

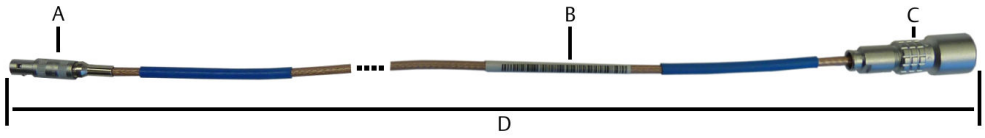

A. Connector to the AMS EZ 1000 Converter (without cap nut)
- *To connect, plug the connector into the sensor socket. The connector locks with an audible click.*
- *To unlock, pull the connector out of the sensor socket.*

B. Label
C. Connector to PR 6424/0xx-xx0, PR 6425/010-1x0, or PR 6426/0x0-xx0
D. Total adapter length: approximately 365 mm

- Bently Nevada 3300 XL 8 mm Proximity Probes 33010x.
  The sensor adapter EZ1900-003-ADAP-2 is required for the connection of 33010x probes.

Figure 5-15: Sensor adapter EZ1900-003-ADAP-2

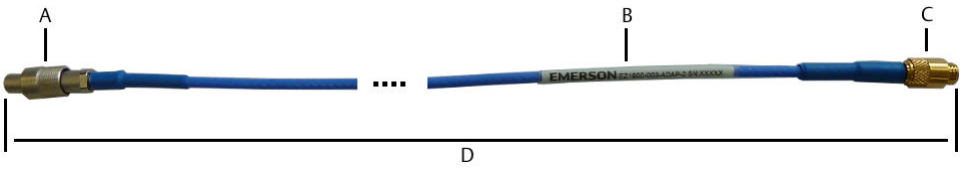

A. Connector to the AMS EZ 1000 Converter
See Connect and Disconnect for how to use the connector.
B. Label
C. Connector to BN 33010x
D. Total adapter length: approximately 365 mm

The sensor socket of the converter is a mini LEMO socked with an external thread to secure the sensor against unintentional removing.

EZ1900-ADAP-90 adapter for EZ108x-xx-xx-xxx

Use the EZ1900-ADAP-90 adapter, shown in Figure 5-16, to connect an EZ108x-xx-xx-xxx sensor to an AMS EZ 1000 Converter mounted in a housing with limited space in depth. See Figure 5-17 for dimensions.

Figure 5-16: EZ1900-ADAP-90 Adapter for EZ108x-xx-xx-xxx



A. Connection to the EZ108x-xx-xx-xxx sensor
B. Connection to the AMS EZ 1000 Converter (self-locking plug)

See Connection with EZ1900-ADAP-90 for how to connect the adapter to the AMS EZ 1000 Converter.

Figure 5-17: EZ1900-ADAP-90 – Dimensions

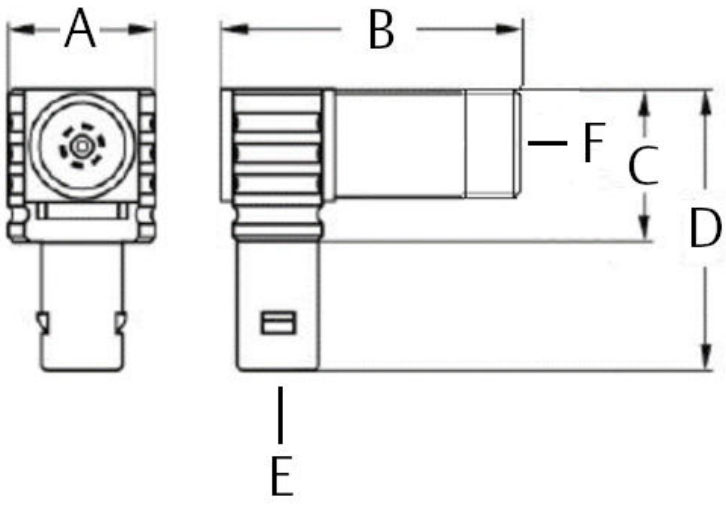

A. 9.0 mm
B. 18.5 mm
C. 9.5 mm
D. 17.5 mm
E. Connection to the AMS EZ 1000 Converter
F. Connection to the EZ108x-xx-xx-xxx sensor

Connect

Procedure

1. Plug the sensor connector into the sensor socket. See Figure 3-1 for the location of the sensor socket.
2. Gently turn the cap nut of the sensor connector clockwise to secure the sensor.

Connection with EZ1900-ADAP-90

Procedure

1. Plug the sensor connector into the threaded sensor socket of the EZ1900-ADAP-90 adapter. See EZ1900-ADAP-90 adapter for EZ108x-xx-xx-xxx.
2. Gently turn the cap nut of the sensor connector clockwise to secure the sensor.
3. Push the adapter into the sensor socket of the AMS EZ 1000 Converter. See Figure 3-1 for the location of the sensor socket. The adapter locks with an audible click.

Disconnect

Procedure

1. Turn the cap nut of the sensor connector counter clockwise to unfasten the sensor.
2. Unplug the sensor.

   If the sensor is connected with the EZ1900-ADAP-90 adapter, pull the adapter out of the sensor socket. When pulled, the plug is automatically unlocked.

Isolate the adapter connection

If using the EZ1900-003-ADAP-1 or the EZ1900-003-ADAP-2 adapter to connect PR 642x sensors or third party sensors to the AMS EZ 1000 Converter, isolate the connection between the sensor cable and the adapter with the included black shrink sleeve. For installation in a hazardous environmental, also use the included blue shrink sleeve.

Procedure

1. At the open connection, push the shrink sleeve over the connector of the sensor cable so that the sleeve completely covers the sensor cable.

   First the blue shrink sleeve[1] and then the black shrink sleeve.
2. Close the connection.
3. Move the black shrink sleeve over the closed connection. Plug and socket must be completely covered by the shrink sleeve.

   Ensure that the shrink sleeve evenly overlaps plug and socket.
4. Use a hot air gun to evenly shrink the sleeve. The required shrinking temperature is approximately 200°C.
5. Ensure that the shrunken sleeve touches sensor cable, plug, and socket. It is important that the shrink sleeve cannot slip from the connection.
6. Move the blue shrink sleeve evenly over the closed connection already isolated with the black shrink sleeve.[1]
7. Use a hot air gun to evenly shrink the blue sleeve. The required shrinking temperature is approximately 200°C.[1]

1 *Only necessary for installation in a hazardous environmental.*

5.4 Adjustment of measuring chains at the machine

5.4.1 General connection

Prerequisites

- -24 V DC power supply, if the converter is not supplied by a measuring amplifier such as an A6500-UM.
- Voltmeter with an accuracy of 1%.

Procedure

1. Connect the converter supply -24 V DC (+24 V to ⊥ (GND)). See Power supply and output signal connection.
2. Connect the sensor to the sensor socket. See Sensor connection.
3. Measure the output level at pins OUT and ⊥ (GND). See Power supply and output signal connection.

5.4.2 Sensors EZ105x-xx-xx-xxx, EZ108x-xx-xx-xxx, PR 6424/0xx-xx0, and PR 6425/010-1x0

Procedure

1. Loosen the lock nut of the sensor.

   See installation guide of the used sensor for further installation details.

2. Turn the sensor in the holder until the nominal distance between sensor tip and measuring target is reached, and the connected voltmeter indicates the desired point on the characteristic curve.

   For sensors with an extension cable, Emerson recommends removing the extension cable to avoid twisting the cable during mounting and turning the sensor. Reconnect the extension cable before measuring the output voltage for the fine adjustment.

   - For measuring shaft vibrations, it is sufficient to adjust the sensor to an output value of -10V ±1 V. See Figure 5-18.
   - For static measurements, a precise adjustment to one output value is required, the sensor is preferably set to one of the three output levels of the converter:
     - For symmetrical displacements around the center point (see Figure 5-19, F) to -10 V ±0.05 V (recommended procedure).
     - For the measuring range minimum (= minimum distance) to -2 V ±0.05 V for single-sided movements to greater distances (Figure 5-19, E).
     - For the measuring range maximum (= maximum distance) to -18 V ±0.05 V for single-sided movements to smaller distances. (Figure 5-19, G).

— Or to any other value within the measuring range when different distances in both directions must be measured.

Note
The position of the machine shaft must be known when adjusting the sensor for static measurement.

Figure 5-18: Characteristic curve - dynamic

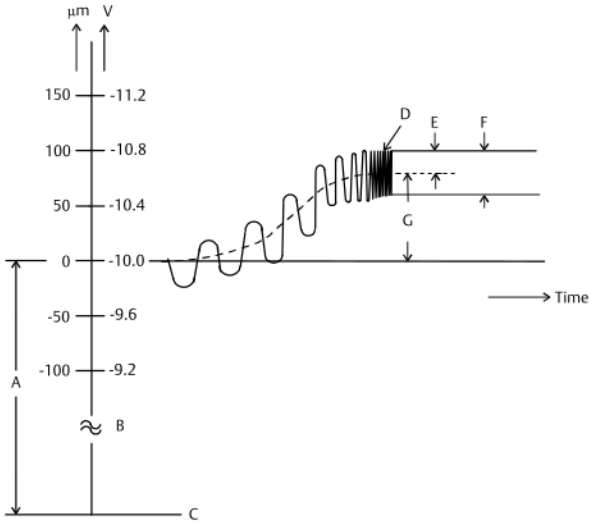

A. Nominal distance[3]
B. Voltage range: -2 V to -18 V
C. Sensor tip
D. Shaft vibration signal
E. 0-to-Peak
F. Peak-to-Peak
G. Quasi static displacement

Figure 5-19: Characteristic curve - static

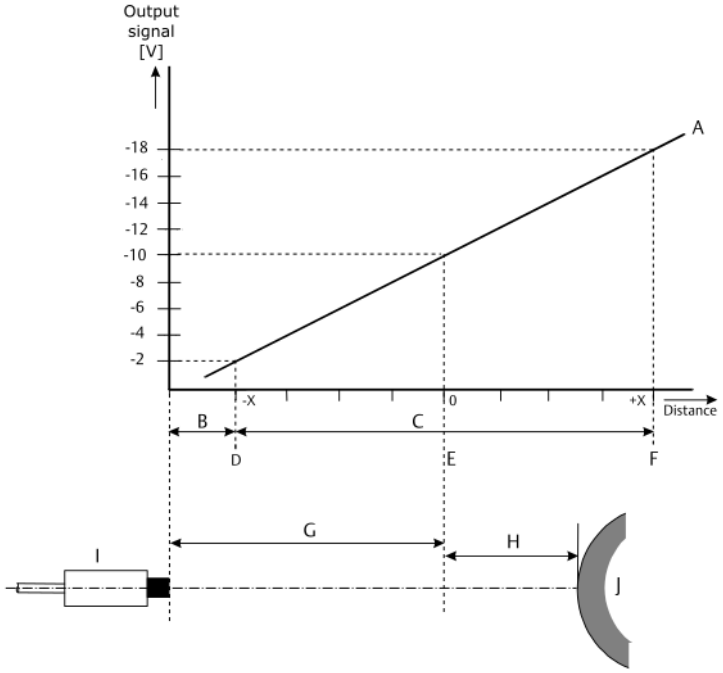

A. Characteristic curve -2 V to -18 V
B. Initial air gap[2]
C. Working range (-x to +x)
D. Minimum distance
E. Center point (zero point)
F. Maximum distance
G. Nominal distance[3]
H. Instantaneous distance[4]
I. Sensor
J. Shaft (measuring target)

3. Fix the sensor using the lock nut.

   For the maximum tightening torque, see sensor installation guide.

5.4.3 Sensor PR 6426/0x0-xx0

If the distance between the mounting flange and the measuring target is not correct, adjust it by shifting the mounting flange. To achieve a precise adjustment, Emerson recommends using a linear guided support such as a bracket with a dovetail guide. See installation guide of the used sensor for further installation details.

2 *Non-linear range at the beginning of the total measuring range of the sensor, before the beginning of the linear measuring range.*
3 *Distance between sensor and zero point of the measuring range including initial air gap.*
4 *Current distance between zero position of the measuring range and measuring target.*

Note
The position of the machine shaft must be known when adjusting the sensor for static measurement.

Procedure

1. Adjust the distance between the sensor and the measuring target by shifting the bracket until the converter output signal has reached the required point on the characteristic curve. See Figure 5-19 for details.
2. Fix the mounting flange in the correct position and secure the screws and the nuts to prevent them from getting loose.

   Ensure that the sensor is mounted vertically to the measuring target.

5.5 Mutual influences of two measuring chains

Two eddy current measuring chains mounted too closely together influence each other and generate invalid measuring results (cross talking effects). Measurements with the risk of mutual influences are:

- Shaft vibration measurement with two sensors in X-Y arrangement (for example: two EZ108x-xx-xx-xxx sensors, mounted in a 90° angle at a shaft with ≤100 mm diameter).
- Shaft displacement measurement with Tandem application.
- Shaft displacement measurement with Cone or Double Cone application.

Figure 5-20: Definition of the distance between two sensors

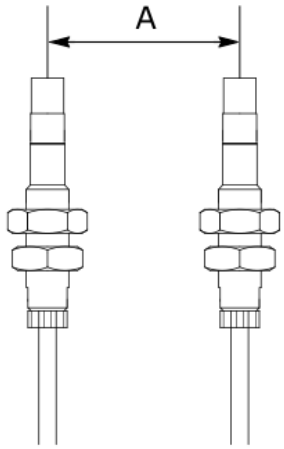

A. Minimum distance between center sensors heads

In this case, the oscillator frequency of one of the converters must be slightly shifted. See Measurement how to change the oscillator frequency.

See Table 5-2 for the minimum distance at de-tuned (different oscillator frequency) and not de-tuned (identical oscillator frequency) measuring chains depending on the sensor type.

Table 5-2: Minimum distances and additional linearity error

Sensor type	De-tuned[1]		Not de-tuned[2]	
	Distance	Additional linearity error	Distance	Additional linearity error
EZ105x	>12 mm	<0.5 %	>19 mm	<5%
EZ108x	>12 mm	<0.5 %	>35 mm	<5%

1 *Different oscillator frequency*
2 *Identical oscillator frequency*

6 Hazardous location installation

⚠ DANGER

Hazardous location installation and Hazardous location installation – application notes are only valid for the variants of the AMS EZ 1000 Converter labeled as an Ex ia or Ex ec device.

Version 1.8

6.1 General installation requirements

The variants of the AMS EZ 1000 Converter listed in Table 6-1 are designed for different types of protection:

- **Ex ia** and **Ex ic [ia]**: Intrinsically safe equipment (in accordance with IEC / EN 60079-11)
- **Ex ec**: Increased safety equipment (in accordance with IEC / EN IEC 60079-7)

Variants of the AMS EZ 1000 Converter with the SIS suffix are certified for functional safety in accordance with IEC 61508.

Refer to Table 6-1 to see which variant corresponds to which type of protection.

Table 6-1: Variants of the AMS EZ 1000 Converter

Variant	Type of protection	Functional safety
EZ1000	Ex ia and Ex ec	
EZ1000-SIS	Ex ia and Ex ec	X
EZ1000-EX	Ex ic [ia] and Ex ec	
EZ1000-SIS-EX	Ex ic [ia] and Ex ec	X

The conditions of use are different, depending on the respective application. Observe the points, listed in this section, for both types of protection.

Sensor and converter are allowed to be mounted within potentially explosive atmospheres. The sensor is connected through a connector to the converter. The converter must be mounted into a field housing.

Third party sensors can be connected, provided that it is permitted by the safety related data of these sensors, and the safety related data of the AMS EZ 1000 Converter.

Note
When operating the AMS EZ 1000 Converter in hazardous areas, observe the following points for installation for type of protection **ia** and **ec**:

- Operation is permitted only if the AMS EZ 1000 Converter is mounted in appropriate field housings that ensure that the converter and housing are not exposed to strokes or shocks and that friction at the housing is avoided.
- The transition resistance of the field housing to the protective earth must not exceed 1 MOhm.

- If using a non-metallic field housing, the surface resistance of that housing must be in accordance to IEC / EN IEC 60079-0 7.4.
- Configuration of the converter through the USB interface is permitted only if no potentially explosive atmosphere is present, and the environmental temperature is below 60°C.
- A battery powered device with U_m = 30 V is required for connection to the USB interface.
- For the maximum environmental temperature of the EZ1xxx and PR 642x sensors approved for temperature classes T2, T4, and T6 see Table 6-6.
- Install the AMS EZ 1000 Converter according to the control drawing CDG 5800-00182.
- For the maximum environmental temperature of the AMS EZ 1000 Converter approved for temperature classes T2, T4, and T6 see Table 6-2 to Table 6-4.
- The influence of power dissipation of other devices placed beside the AMS EZ 1000 Converter has to be taken into account with regard to temperature rise of the ambient temperature of the AMS EZ 1000 Converter.
- The AMS EZ 1000 Converter has to be installed and used in such a way that electrostatic charging from operation, maintenance, or cleaning is excluded.
- The tip of the sensor types EZ105x, EZ108x, EZ116x, EZ116H, EZ132x, and PR 642x must be installed in such a way that a mechanical hazard (impact) can be excluded.
- The terminal screws have to be tightened with a torque of 0.5 to 0.6 Nm.
- The converter is intended for use with safety barriers as an **Ex ia** or **Ex ic[ia]** device or without safety barriers as an **Ex ec** device. Once used without an safety barrier, it is not permitted to use the device as an **Ex ia** device.

6.2 Installation requirements – intrinsic safe

In the following conditions, sensors EZ105x, EZ108x, EZ116x, EZ116H, EZ132x, and PR 642x in combination with the AMS EZ 1000 Converter can be used for applications in hazardous areas for Zone 0, protection class Intrinsic safety – Ex ia IIC T6:

- Connect the AMS EZ 1000 Converter by using safety barriers according to Control drawings.
- All barriers with Zener diodes and safety data within the permitted limits are approved.
- The characteristic of the safety barriers must be linear.
- Install the safety barriers outside of the explosive area, in cabinets or control cubicles with protection classes of at least IP 20, according to IEC 60529.
- Operation is permitted only in appropriate field housings (protective enclosures) that ensure a degree of protection of at least IP 2X and a pollution degree 2 inside for EZ 1000-EX and EZ 1000-SIS-EX.
- With appropriate approval, the safety barriers can be installed in Zone 2. In this case, observe the specifications of the manufacturer.

- The intrinsically safe circuits are connected to earth; along the intrinsically safe circuits potential equalization must exist.
- To achieve compensation of electric potentials, connect the connectors for the protective earth to the corresponding protective earth connectors by a compensation cable within the explosive area.
- Isolate the mounting rail for the safety barriers.
- Within the ATEX-field of application, dimension the compensation cable according to IEC / EN 60079-14 12.2.4 with a minimum copper wire cross section of 2x1.5 mm^2 or 1x4 mm^2. Outside of the ATEX-field of application, observe the respectively valid installation instructions.
- The signal converter type EZ1000 and type EZ1000-SIS shall be mounted completely inside an additional enclosure in accordance with IEC / EN IEC 60079-0, providing a degree of protection of not less than IP20.
- During the installation internal wiring, clearances, creepage distances, and separations have to be considered according to IEC / EN 60079-11.
- Observe the heating within the field housing. Expect a maximum heat dissipation of 840 mW for each AMS EZ 1000 Converter.
- Neither P_{O1} nor P_{O2} may exceed 630 mW.

6.3 Installation requirements – increased safety

The sensors EZ105x, EZ108x, EZ116x, EZ116H, EZ132x, and PR 642x are connected to the AMS EZ 1000 Converter with intrinsically protection class in Zone 2/Division 2 by internal protection of the AMS EZ 1000 Converter.

In the following conditions, the sensors EZ105x, EZ108x, EZ116x, EZ116H, EZ132x, and PR 642x in combination with the AMS EZ 1000 Converter can be used for applications in hazardous areas for Zone 2/Division 2, protection class increased safety – Ex ec:

- Solely connect the AMS EZ 1000 Converter to SELV/PELV electrical circuits to meet the requirements of U_m= -60 V for the explosion protection. This is valid for both, the supply (-24 V/⊥) and the signal (⊥/OUT) terminals.
- The signal converter type EZ1000 and type EZ1000-SIS shall be mounted completely inside an additional enclosure in accordance with IEC / EN IEC 60079-0 and IEC / EN IEC 60079-7, providing a degree of protection of not less than IP54.
- For installation of the AMS EZ1000 Converter in Zone 2 areas, it has to be mounted in an enclosure which is in accordance with IEC / EN IEC 60079-7.
- The field housing must labeled with the following warning:
  WARNING – EXPLOSION HAZARD – DO NOT OPEN ENCLOSURE UNLESS AREA IS KNOWN TO BE NON-HAZARDOUS.
  AVERTISSEMENT – RISQUE D'EXPLOSION. – NE PAS OUVRIR L'ENCEINTE, A MOIS QU'IL NE S'UN EMPLACEMENT NON DANGEREUX.
- The field housing is only accessible by tools.
- The field housing and the cable glands must have an approval for the required temperature range.

- At temperatures higher than 70°C at the cable inlet of the field housing, ensure that proper glands and cables are used.
- The connection terminal block of the AMS EZ 1000 Converter must be plugged-in when the wires are energized (IEC / EN IEC 60079-0 - 20.4).
- Dimension the connection compartment so that cables can be connected without any complications. The minimum dimension of the field housing cross section is 120 mm x 155 mm (see Figure 6-1).

Figure 6-1: Minimum dimension of the field housing cross section

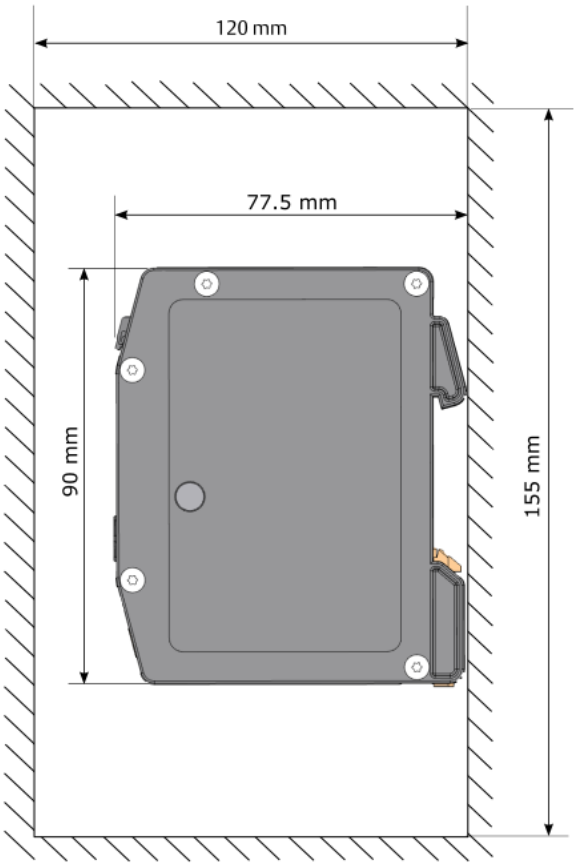

- Ensure that the cable glands match the diameter of the used cables.
  - Diameter EZ105x, EZ108x, EZ116x, EZ116H, EZ132x, and PR 642x sensor cable: 2.65 to 2.90 mm
  - Diameter of the supply and signal cables are variable and must be observed.
- The wire cross section of the cables used for supply and signal must be within the range of $0.34 < F < 2.5\ mm^2$. At stranded conductors, use ferrules.
- During the installation clearances, creepage distances, and separation have to be considered according to IEC / EN IEC 60079-7.
- Observe the heating within the field housing. Expect a maximum heat dissipation of 1.12 W for each AMS EZ 1000 Converter.

- The equipment shall only be used in an area of not more than pollution degree 2, as defined in IEC 60664-1.

6.4 Installation of the sensors

If an EZ105x, EZ108x, EZ116x, EZ116H, EZ132x, or PR 642x sensor is used with interconnector, the grounding of the connector housing has to be considered. Isolate the connector:

1. Shrink the black shrink sleeve on the interconnector.
2. Additionally, shrink the blue shrink sleeve on the interconnector already isolated with the black shrink sleeve.

Both shrink sleeves have to be positioned and shrank over the housing of the connector.

Third party sensors must comply to the Ex i requirements.

During the sensor mounting, give particular attention to the grounding of its metal housing. The transition resistance of the sensor housing to the protective earth must not exceed 1 MOhm.

6.5 CSA – Special conditions of safe use

Note

Installation in protection class Ex i (intrinsically safe) or Ex ec (increased safety):

- Install the AMS EZ 1000 Converter in accordance to the control drawing CDG 5800-00182.
- Install the converter completely inside an additional enclosure according to CSA/UL 60079-0, providing a degree of protection of not less than IP 54.
- Final acceptance of the equipment when installed is subject to the jurisdiction of the local inspection authority.

6.6 Technical data, explosion protection

For connection to intrinsically safe electric circuits and for use in hazardous areas, the AMS EZ 1000 Converter is tested and certified for:

Explosion protection class

Table 6-2: cCSAus – EZ1000 and EZ1000-SIS

Intrinsically safe (Ex ia)	
Identification	Class I, Division 1
	Group A, B, C, D T6, T4, T2
	(Class 1, Zone 0/1)
	Ex/AEx ia IIC T6, T4, T2 Ga
	T6 -35°C ≤ Ta ≤ 50°C

Table 6-2: cCSAus – EZ1000 and EZ1000-SIS *(continued)*

	T4 -35°C ≤ Ta ≤ 80°C
	T2 -35°C ≤ Ta ≤ 80°C
Standards	CSA 60079-0
	CSA 60079-11
CSA approval number	CSA 18CA70093801
Increased safety (Ex ec)	
Identification	Class I, Division 2
	Group A, B, C, D T6, T4, T2
	(Class 1, Zone 2)
	Ex/ AEx ec [ic] IIC T6 T4 T2 Gc
	T6 -35°C ≤ Ta ≤ 50°C
	T4 -35°C ≤ Ta ≤ 80°C
	T2 -35°C ≤ Ta ≤ 80°C
Standards	CSA E60079-7 (Zone 2, increased safety ec)
	CSA 60079-0, Equipment - general requirements
	UL 60079-7-02 (Increased safety ec)
CSA approval number	CSA 18CA70093801

Table 6-3: ATEX/IECEx

Intrinsically safe (Ex ia)	
Identification EZ1000 and EZ1000-SIS	II 1G Ex ia IIC T6, T4, T2 Ga
	T6 -35°C ≤ Ta ≤ 50°C
	T4 -35°C ≤ Ta ≤ 80°C
	T2 -35°C ≤ Ta ≤ 80°C
Identification EZ1000-EX and EZ1000-SIS-EX	II 3 (1) G Ex ic [ia Ga] IIC T6, T4, T2 Gc
	T6 -35°C ≤ Ta ≤ 50°C
	T4 -35°C ≤ Ta ≤ 80°C
	T2 -35°C ≤ Ta ≤ 80°C
Standards	According to EU standard 2014/34/EU
	EN IEC 60079-0:2018, Equipment - general requirements
	EN 60079-11:2012, Intrinsically safe "i"
	IEC 60079-0:2017, Edition 7.0, Equipment - general requirements
	IEC 60079-11:2011, Edition 6.0, Intrinsically safe "i"
ATEX approval number	BVS 18 ATEX E 011 X

Table 6-3: ATEX/IECEx *(continued)*

IECEx approval number	IECEx BVS 18.0009X
Increased safety (Ex ec)	
Identification	Ⓔx II 3G Ex ec [ic] IIC T6, T4, T2 Gc
	T6 -35°C ≤ Ta ≤ 50°C
	T4 -35°C ≤ Ta ≤ 80°C
	T2 -35°C ≤ Ta ≤ 80°C
Standards	According to EU standard 2014/34/EU
	EN IEC 60079-0:2018, Equipment - general requirements
	EN IEC 60079-7:2015 + A1:2018, Increased safety ec
	IEC 60079-0:2017, Edition 7.0, Equipment - general requirements
	IEC 60079-7:2017, Edition 5.1, Increased safety ec
ATEX approval number	BVS 18 ATEX E 011 X
IECEx approval number	IECEx BVS 18.0009X

Table 6-4: General

Electrical data	
Output and supply circuit	With explosion protection class Intrinsically safe, only for connection to certified intrinsically safe circuits with the following maximum values.
-24 V / ⊥/ ⊥ / Out terminals	
Open-circuit voltage	U_i = -28 V
Sum of short- circuit currents	ΣI_i = -140 mA
Total power	ΣP_i = 840 mW
Within output- and supply circuit effective internal capacity and inductance	C_i = 5 nF
	L_i = 0 mH (negligible)
Sensor circuit	With explosion protection class Intrinsically safe, only for connection of sensors which are, together with their connection cable and where applicable their extension cable, do not exceed the total maximum capacities and inductances.
Sensor terminal	
Open-circuit voltage	U_0 = 7.14 V
Short-circuit current	I_0 = 140 mA
Total power	P_0 = 250 mW
	C_0 = 600 nF
	L_0 = 790 µH
USB connector	With explosion protection class Intrinsically safe and Increased safety, only for connection to circuits with the following values.
	U_m = 30 V
-24 V / ⊥/ ⊥ / Out terminals	With explosion protection class Increased safety, only for connection to circuits with the following maximum values.
	U_m = -60 V

Table 6-5: Capacities and inductances of sensors including connection cable and extension cable

Sensor	**Capacity (C_{Sensor})**	**Inductance (L_{Sensor})**
EZ105x, EZ108x, EZ116x, EZ116H, EZ132x, and PR 642x with 4 m cable	≤450 pF	≤100 µH
For each additional meter cable (maximum total cable length = 30m + 10%)	+110 pF	negligible
EZ1900-003-ADAP-1 Adapter cable for connection of PR 642x sensors	+39 pF	negligible

Table 6-5: Capacities and inductances of sensors including connection cable and extension cable *(continued)*

Sensor	Capacity (C_{Sensor})	Inductance (L_{Sensor})
EZ1900-003-ADAP-2 Adapter cable for connection of BN 33010x sensors	+39 pF	negligible
EZ1900-ADAP-90 Elbow adapter	negligible	negligible

Table 6-6: Temperature classification of sensors

EZ105x and EZ108x	T6 -35°C ≤ T_a ≤ 55°C T4 -35°C ≤ T_a ≤ 130°C T2 -35°C ≤ T_a ≤ 200°C
PR 6422	T6 -35°C ≤ T_a ≤ 60°C T4 -35°C ≤ T_a ≤ 130°C T2 -35°C ≤ T_a ≤ 145°C
PR 6423	T6 -35°C ≤ T_a ≤ 65°C T4 -35°C ≤ T_a ≤ 130°C T2 -35°C ≤ T_a ≤ 200°C
PR 6424, EZ116x	T6 -35°C ≤ T_a ≤ 65°C T4 -35°C ≤ T_a ≤ 130°C T2 -35°C ≤ T_a ≤ 150°C
PR 6425, EZ116H	T6 -35°C ≤ T_a ≤ 65°C T4 -35°C ≤ T_a ≤ 130°C T2 -35°C ≤ T_a ≤ 275°C
PR 6426, EZ132x	T6 -35°C ≤ T_a ≤ 65°C T4 -35°C ≤ T_a ≤ 115°C T2 -35°C ≤ T_a ≤ 150°C
PR 642x high temperature types	T6 -35°C ≤ T_a ≤ 65°C T4 -35°C ≤ T_a ≤ 130°C T2 -35°C ≤ T_a ≤ 200°C

6.7 Control drawings

Control - Drawing

Control - Drawing : eddy - current - measuring chain (CSA), instrinsically safe

Class I Division 1 (Zone 0/1) Groups A, B, C, D	Do not configure via USB unless area is known to be non hazardous. Connect only USB equipment with Um < 30V. Max. Tamb = 60°C while configuration via USB.

If an EZ1xxx or PR642x sensor is used with interconnector, the grounding of the connector housing has to be considered.

The connector has to be isolated with:
1. The black shrinking sleeve and
2. The blue shrinking sleeve.

Both sleeves have to be positioned and shrinked over the housing of the connector.

Third party sensors must comply to the Ex i requirements.

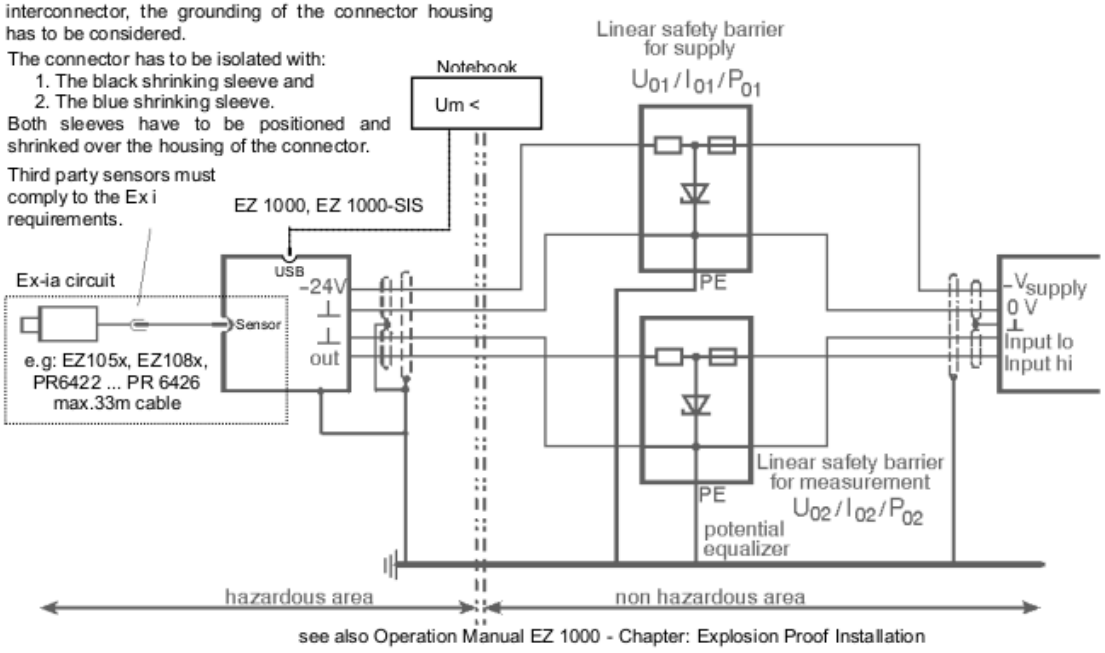

see also Operation Manual EZ 1000 - Chapter: Explosion Proof Installation

Eddy current measuring chain (–24V / ⊥ / ⊥ / OUT):	Maximum Barrier parameters with linear characteristics:	Output circuit in type of protection Ex ia (plug connector sensor)	Sensor EZ 1xxx, PR 6422 ... PR 6426
U_i (V_{max}) = –28 V		U_o (V_{max}) = 7,14 V	Internal capacity / inductance with max. 33m sensor cable
I_i (I_{max}) = –140 mA	U_{O1} and U_{O2} ≤ U_i	I_o (I_{max}) = 140 mA	
P_i = 840 mW	I_{O1} + I_{O2} ≤ I_i	P_o = 250 mW	$C_{i\ SENSOR}$ = 3,7nF
C_i = 5 nF	P_{O1} + P_{O1} ≤ P_i	C_o = 600nF	$L_{i\ SENSOR}$ = 100µH
L_i = negligible	P_{O1} / P_{O1} ≤ 630 mW	L_o = 790µH	

Maximum ambient temperatures

Sensor	T6	T4	T2
EZ 105x	55°C	130°C	200°C
EZ 108x	55°C	130°C	200°C
PR 6422	60°C	130°C	145°C
PR 6423	65°C	130°C	200°C
PR6424/EZ116x	65°C	130°C	150°C
PR6425/EZ116H	65°C	130°C	275°C
PR6426/EZ132x	65°C	115°C	150°C
PR 642x HT	65°C	130°C	200°C

Converter	T6
EZ 1000 EZ 1000-SIS	-35...+50°C

T4, T2
-35...+80°C

USB configure
-35...+60°C

External capacities/inductivities

Groups	C_o (C_a)	L_o (L_a)
A, B	78nF	1,8mH
C	645nF	7,2mH
D	2,145µF	14,5mH

CDG 5800-00182 – Rev.05 – Page 1/3

Control - Drawing

Control - Drawing : eddy - current - measuring chain (CSA), increased safety apparatus / intrinsically safe

Class I Division 2 (Zone 2) Groups A, B, C, D	The wire diameter of the supply line and the signal line must be 0,34 to 2,5 mm².

If an EZ 1xxx or PR 642x sensor is used with interconnector, the grounding of the connector housing has to be considered. The connector has to be isolated with:
1. The black shrinking sleeve and
2. The blue shrinking sleeve.

Both sleeves have to be positioned and shrinked over the housing of the connector.

Third party sensors must comply to the Ex i requirements

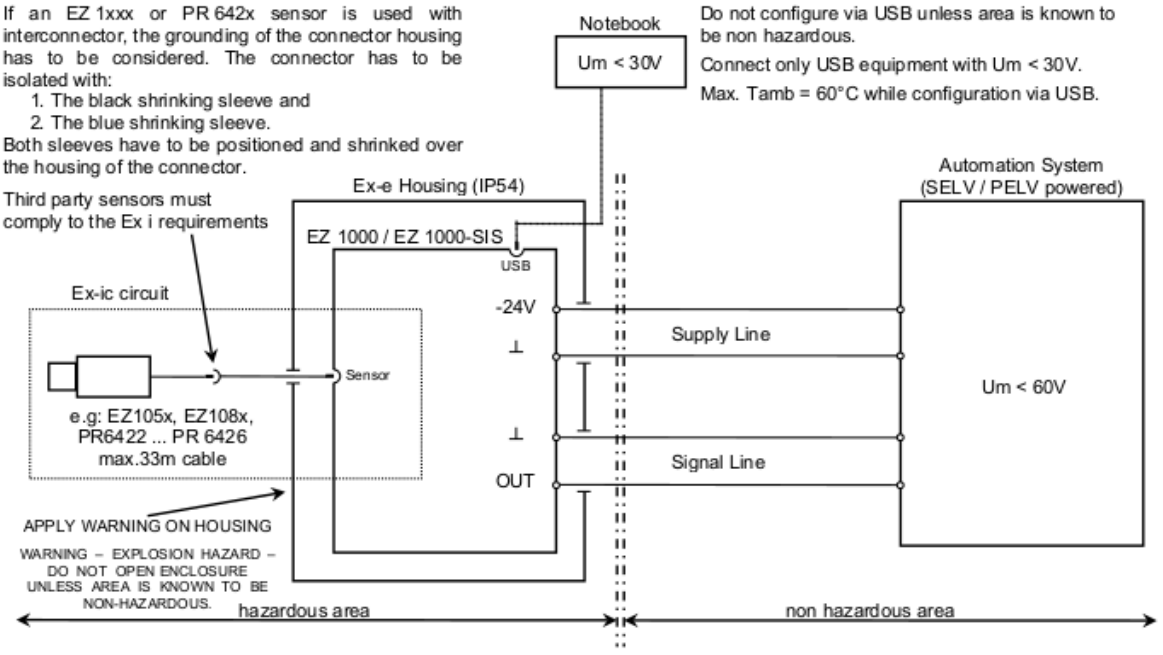

see also Operation Manual EZ 1000 - Chapter: Explosion Proof Installation

Output circuit in type of protection Ex ic (plug connector sensor)			Sensor EZ 1xxx, PR6422 ... PR 6426 Internal capacity / inductance with max. 33m sensor cable
U_o (V_{max})	= 7,14 V	/ C_o = 600nF	$C_{i\ SENSOR}$ = 3,63nF
I_o (I_{max})	= 140 mA	/ L_o = 790µH	$L_{i\ SENSOR}$ = 100µH
P_o	= 250 mW		

Maximum ambient temperatures

Sensor	T6	T4	T2
EZ 105x	55°C	130°C	200°C
EZ 108x	55°C	130°C	200°C
PR 6422	60°C	130°C	145°C
PR 6423	65°C	130°C	200°C
PR6424/EZ116x	65°C	130°C	150°C
PR6425/EZ116H	65°C	130°C	275°C
PR6426/EZ132x	65°C	115°C	150°C
PR 642x HT	65°C	130°C	200°C

Converter	T6
EZ 1000 EZ 1000-SIS	-35...+50°C

T4, T2
-35...+80°C

USB configure
-35...+60°C

CDG 5800-00182 – Rev.05 – Page 2/3

Control - Drawing

SPECIAL CONDITION OF SAFE USE:

- THE INFLUENCE OF POWER DISSIPATION OF OTHER DEVICES PLACED BESIDE THE CONVERTER HAS TO BEEN TAKEN INTO ACCOUNT WITH REGARD TO TEMPERATURE RISE OF THE CONVERTERS'S AMBIENT TEMPERATURE.
- THE APPARATUS HAS TO BE INSTALLED AND USED IN SUCH A WAY THAT ELECTROSTATIC CHARGING FROM OPERATION, MAINTENANCE OR CLEANING IS EXCLUDED.
- THE INTRINSICALLY SAFE CIRCUITS ARE CONNECTED TO EARTH; ALONG THE INTRINSICALLY SAFE CIRCUITS POTENTIAL EQUALIZATION MUST EXIST.
- FINAL ACCEPTANCE OF THIS EQUIPMENT WHEN INSTALLED IS SUBJECT TO THE JURISDICTION OF THE LOCAL INSPECTION AUTHORITY.

FOR USE AS AN INTRINSICALLY SAFE APPARATUS (Ex ia IIC T6,T4,T2 Ga):

- NEITHER PO1 NOR PO2 MAY EXCEED 630 mW.
- THE SIGNAL CONVERTER EZ1000 SHALL BE MOUNTED COMPLETELY INSIDE IN AN ADDITIONAL ENCLOSURE FULFILLING AT LEAST IP 20 IN ACCORDANCE WITH CSA/UL 60079-0 AND IEC 60079-0 AND IEC 60079-11.
- DURING THE INSTALLATION INTERNAL WIRING, CLEARANCES, CREEPAGE DISTANCES AND SEPARATIONS HAVE TO BE CONSIDERED ACCORDING TO IEC 60079-11.

FOR USE AS AN ASSOCIATED APPARATUS (Ex ec [ic] IIC T6,T4,T2 Gc):

- THE SIGNAL CONVERTER EZ 1000 SHALL BE MOUNTED COMPLETELY INSIDE IN AN ADDITIONAL ENCLOSURE IN ACCORDANCE WITH CSA/UL 60079-0, IEC 60079-0 AND IEC 60079-7, PROVIDING A DEGREE OF PROTECTION OF NOT LESS THAN IP 54.
- DURING THE INSTALLATION CLEARANCES, CREEPAGE DISTANCES AND SEPARATIONS HAVE TO BE CONSIDERED ACCORDING TO IEC 60079-7.
- THE APPARATUS SHALL ONLY BE USED IN AN AREA OF AT LEAST POLLUTION DEGREE 2, AS DEFINED IN IEC 60664-1.
- MAXIMUM OVERVOLTAGE CATEGORY II ACCORDING TO IEC 60664-1 IS PERMITTED FOR THE CIRCUITS.

WARNINGS:

- WARNING – EXPLOSION HAZARD – DO NOT OPEN ENCLOSURE UNLESS AREA IS KNOWN TO BE NON-HAZARDOUS.
- AVERTISSEMENT – RISQUE D'EXPLOSION. - NE PAS OUVRIR L'ENCEINTE, À MOIS QU'IL NE S'UN EMPLACEMENT NON DANGEREUX.

CDG 5800-00182 – Rev.05 – Page 3/3

6.8 Revision history

Version	Date	Remarks/Changes
1.0	26. January 2018	Initial version
1.1	3. April 2018	Control Drawing update
1.2	10. July 2018	Grammar corrections
1.3	1. August 2018	Control Drawing update and addition to chapter 6.2
1.4	7. August 2020	Control Drawing update, EN IEC 60079-0 update, and temperature classification change
1.5	7. January 2022	Added EZ1000-SIS, standards correction, and minor corrections
1.51	10. January 2022	Standards correction
1.6	3. February 2022	Changed standards, installation requirements update, technical data update
1.7	7. March 2022	Corrected typo: none-sparking
1.8	19. February 2026	EZ1000-EX and EZ100-SIS-EX for ATEX/IECEx added

7 Hazardous location installation – application notes

⚠ DANGER

Hazardous location installation and Hazardous location installation – application notes are only valid for the variants of the AMS EZ 1000 Converter labeled as an Ex ia or Ex ec device.

This chapter contains additional information about the installation of the AMS EZ 1000 Converter within hazardous areas. Before installing the AMS EZ 1000 Converter within hazardous areas observe the information of Hazardous location installation.

7.1 Mark the converter as "once used without safety barrier"

The converter is intended for use with safety barriers as an Ex ia device or without safety barriers as an Ex ec device. Once used without a safety barrier, it is not permitted to use the device as an Ex ia device. The AMS EZ 1000 Converter has a removable sticker to mark the converter as "once used without safety barrier".

Remove the sticker with the inscription "remove at non intrinsically safe usage" shown in Figure 7-1 to mark the AMS EZ 1000 Converter as "once used without safety barrier".

Figure 7-1: Removable sticker



A. Removable sticker
The inscription below the sticker reads: Only non intrinsically safe use.

7.2 AMS EZ 1000 Converter with AMS 6500

Use an additional diode when connecting an AMS EZ 1000 Converter through safety barriers to cards for eddy current sensors of the AMS 6500 system.

The nominal voltage of the safety barriers with U_0= -28 V is slightly lower than the nominal supply voltage of the AMS 6500 cards for eddy current measuring chains. To reduce unintentional and disturbing effects, it is necessary to integrate a diode module into the converter supply circuit. Install the diode module between the safety barrier for the supply circuit and the AMS 6500 card. Diode module and safety barrier for the supply circuit are delivered together in a package (order code: MPT9001/00-280/085/101)

Figure 7-2: Connection diagram – additional diode

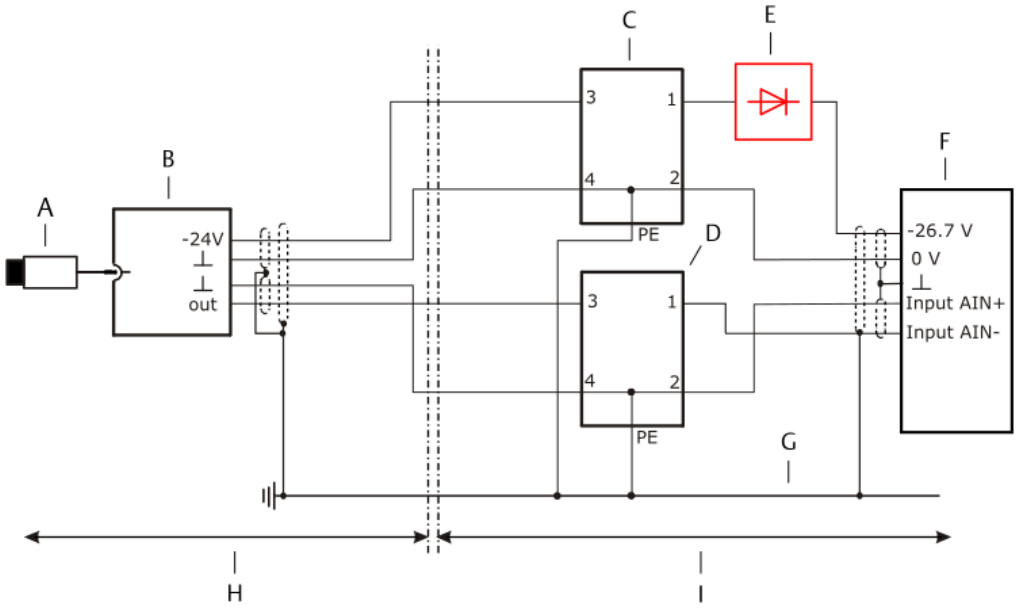

A. Sensor, such as EZ 105x or EZ 108x.
B. AMS EZ 1000 Converter
C. Safety barrier, supply circuit (Stahl 9001/00-280/085/101)
D. Safety barrier, measuring circuit (Stahl 9001/00-280/020/101)
E. Two level terminal with diode. The diode is only necessary at supply voltages higher than -26 V.
F. AMS 6500 card for eddy current sensors, such as A6110, A6210, or A6312.
G. Potential equalizer
H. Hazardous area
I. Non-hazardous area

7.3 AMS EZ 1000 Converter with Ex isolation transducers and Zener barriers

Ex isolation transducers, such as listed below, can be used to install the AMS EZ 1000 Converter in accordance to the approvals in hazardous areas, as specified in Hazardous location installation.

- STAHL 9147/10-99-10s
- STAHL 9147/20-99-10k
- STAHL 9147/10-99-10k
- MTL 4531
- MTL 5531
- Pepperl+Fuchs KFD2-VR4-Ex1.26

Figure 7-3 explains in a general way how to connect an AMS EZ 1000 Converter to an Ex isolation transducer. For detailed installation and connection information see the documentation of the used Ex installation transducer. Emerson recommends using an external power supply to supply Ex isolation transducers as the nominal current of Ex isolation transducers is typically higher than the current provided by measurement cards such as the A6500-UM Universal Measurement card of the AMS 6500 ATG system.

Figure 7-3: General connection example

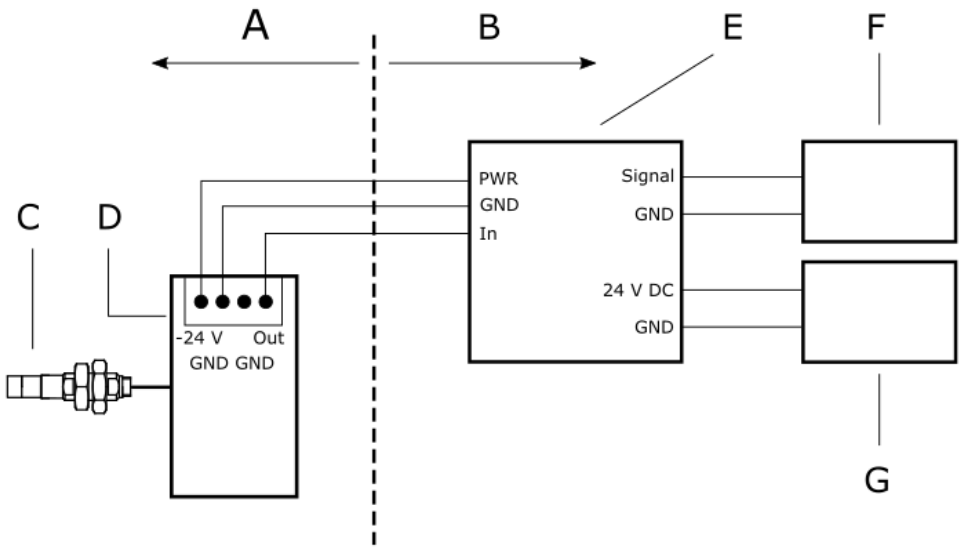

A. Hazardous area
B. Non-hazardous area
C. AMS EZ 1000 Sensor or PR642x
D. AMS EZ 1000 Converter
E. Ex Isolation Transducer
F. Measuring Card such as an A6500-UM Universal Measuring card
G. External power supply

An Ex isolation transducer installed between an AMS EZ 1000 Converter and a measuring card has an influence on the output signal of the converter. An output signal of less than -16 V causes the Ex isolation transducer to clip the output signal. This behavior affects the static and dynamic distance measurement in different ways:

Static distance measurement

The nominal linear output range is slightly reduced when using an Ex isolation transducer. The maximum output voltage with Ex isolation transducer is approximately -16 V, so the nominal output voltage of -18 V is reduced by 2 V (see Figure 7-4). Consider this behavior when planning a static distance measurement.

Figure 7-4: Reduced static distance measurement

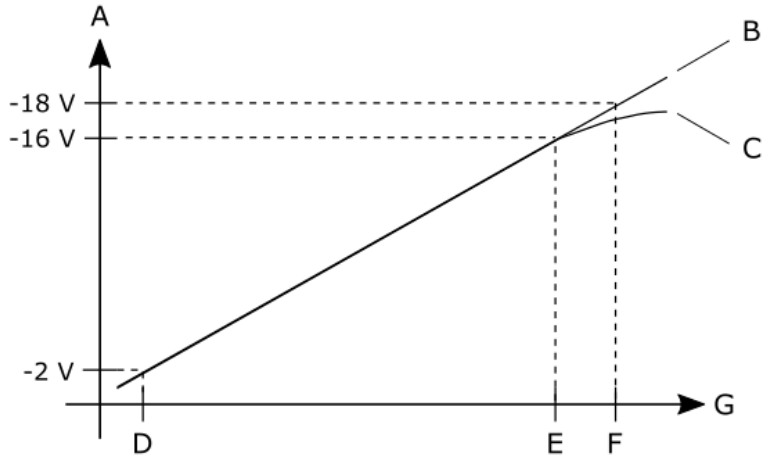

A. Output voltage
B. Nominal output voltage range: -2.0 V to -18 V
C. Reduced output voltage range: -2.0 V to -16 V
D. Beginning of the measuring range
E. End of the measuring range when using an Ex isolation transmitter
F. Nominal end of the measuring range without Ex isolation transmitter
G. Time

Dynamic distance measurement

Ensure that the distance between sensor and measuring object is adjusted so that a connected multimeter reads a DC voltage of approximately -10 V (see Adjustment of measuring chains at the machine). This standard adjustment avoids clipping of the signal at high vibration amplitudes.

7.3.1 AMS EZ 1000 Converter with Zener barriers

Zener barriers, such as listed below, can be used to install the AMS EZ 1000 Converter in accordance to the approvals in hazardous areas, as specified in Hazardous location installation.

- Stahl 9001/00-280-020|085-101 (U_0 = 28 V)
- Stahl 9002/00-260-138-001 (U_0 = 26 V)
- MTL 7796- (U_0 = 28 V)

The maximum voltage U_0 of the Zener barrier, installed between an AMS EZ 1000 Converter and a measuring card, has an influence on the output signal of the converter. An output signal of less than -16 V causes Zener barriers with a maximum voltage of U_0 = 26 V to clip the output signal. Zener barriers with a maximum voltage of U_0 = 28 V clip the output signal at approximately -18 V, so the nominal output of -18 V of the AMS EZ 1000 Converter can be reached. See Figure 7-5.

Note
Consider this behavior when planning a static distance measurement. When planning a dynamic distance measurement, ensure that the distance between sensor and measuring object is adjusted so that a connected multimeter reads a DC voltage of approximately -10 V. This standard adjustment is always recommended (see Adjustment of measuring chains at the machine).

Figure 7-5: Static distance measurement – maximum output voltage depending on U_0

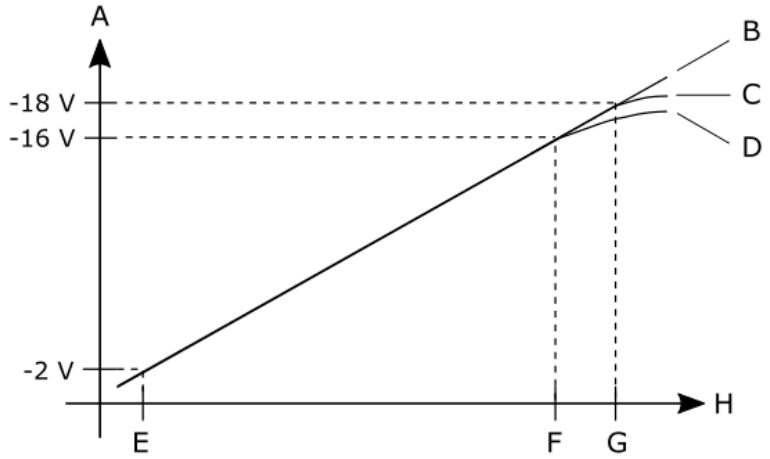

A. Output voltage
B. Nominal output voltage range: -2 V to -18 V
C. Output voltage range with Zener barrier with U_0 = 28 V
D. Reduced output voltage range with Zener barrier with U_0 = 26 V
E. Beginning of the measuring range
F. End of the measuring range when using a Zener barrier with U_0 = 26 V
G. Nominal end of the measuring range and end of the range with a Zener barrier with U_0 = 28 V
H. Time

Supply boost

The sensor supply boost in the A6500-UM card must be activated or deactivated depending on the maximum voltage U_0 of the selected Zener barrier. Open the configuration of the A6500-UM card where the AMS EZ 1000 Converter with Zener barrier is connected to and go to **Input** → **Sensor supply boost**. See Figure 7-6.

U_0 = 26 V	Remove the checkmark to deactivate the sensor supply boost.
U_0 = 28 V	Click the checkbox to activate the sensor supply boost.

Figure 7-6: A6500-UM card – input configuration

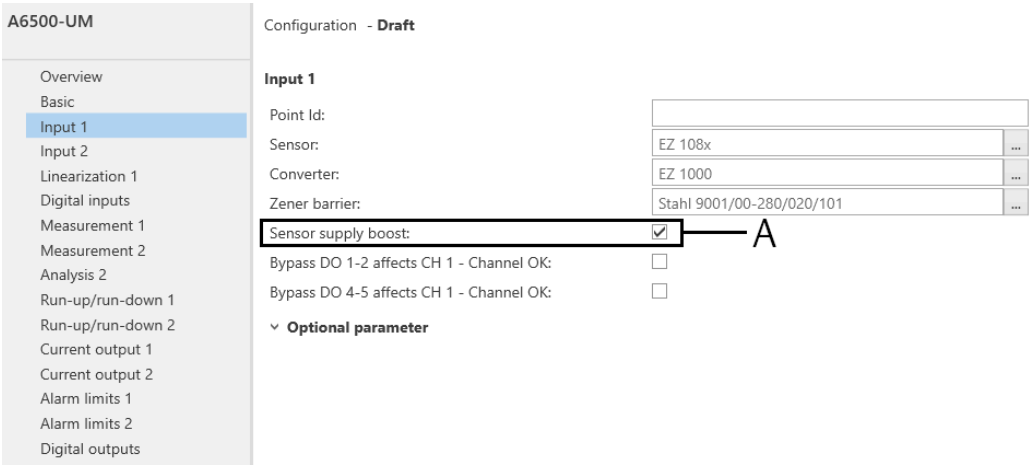

A. ***Sensor supply boost*** *Parameter*

8 Configuration

8.1 General configuration procedure

The configuration can be performed offline without connection to the AMS EZ 1000 Converter or online with a connection to the converter. In any case, the configuration must be loaded to the converter to become active.

Prerequisites

- USB cable with Type-A and micro-USB B plug

  Note
  The USB interface is designed for configuration, maintenance, and trouble-shooting purposes. Do not leave the USB Interface permanently connected.

- Latest version of AMS Machine Studio (configuration software)

  Note
  For general description of the configuration software, see operating manual "Machine Studio – General Functions" (MHM-97879).

- Computer with Microsoft Windows 10 or Microsoft Windows 11
  For intrinsically safe operations, use a battery powered device with a battery voltage of less than 30 V (see General installation requirements).

8.1.1 Offline configuration overview

Procedure

1. Start AMS Machine Studio.
2. Enter configuration parameter according to the used eddy current sensor and the measuring task (see Configuration editor and parameters).
   The calibration procedure requires an online connection to the converter.
3. Save the configuration (**Configuration editor → File → Save as**).
   When you connect to the converter, load the saved configuration file to the converter, and complete the calibration process (see Send a saved configuration file to the AMS EZ 1000 Converter).

Send a saved configuration file to the AMS EZ 1000 Converter

Procedure

1. Switch on the power supply of the converter, if not already done.
2. Connect the converter to the configuration computer by using the USB connection (see Figure 8-2).
3. Start AMS Machine Studio.

The converter is automatically detected by AMS Machine Studio.

4. Select the converter to be configured, and click **Configure**.
5. Open the saved configuration file (window **File**, menu item **Open**).

Note
If a **Custom sensor file** provided by Emerson has been opened, parameters that do not need to be configured are grayed out.

6. Check the configuration – does the configuration meet the requirements of the measurement?
7. The calibration data is not always included in the saved configuration file. If the **Calibration** tab is marked with the yellow warning triangle, start the calibration process, and select a calibration method (see Calibration).

Figure 8-1: Calibration required

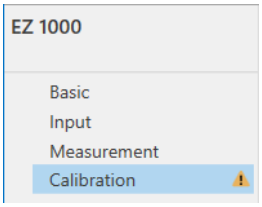

The configuration is sent to the converter during the calibration process.

The configuration is automatically saved to the current project.

8. If a single file is needed, save the configuration (**Configuration editor** → **File** → **Save as**).

   The data of the calibration is saved with the configuration file. The data of the **Automatic calibration** and the **Offline calibration** (Easy calibration – calibration process without AMS Machine Studio) is saved as **Manual calibration** data.

Note
Before saving the configuration, reload the configuration including the calibration data from the AMS EZ 1000 Converter. See Reload.

9. Close AMS Machine Studio, and disconnect from the converter.
   After these steps, the converter is ready for operation.

8.1.2 Online configuration overview

Procedure

1. Switch on the power supply of the converter, if not already done.
2. Connect the converter to the configuration computer by using the USB connection.

Figure 8-2: Connection – computer to USB interface

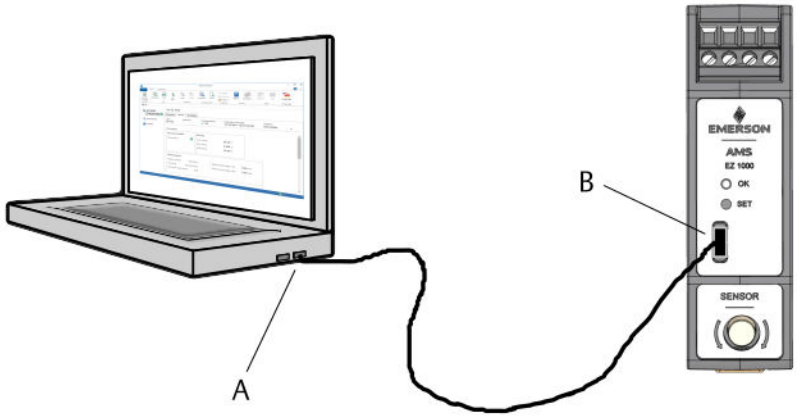

A. USB socket at the computer with AMS Machine Studio installed.
B. USB interface at the converter front.

3. Start AMS Machine Studio.
   The AMS EZ 1000 Converter is automatically detected by AMS Machine Studio.
4. Select the converter to be configured, and click **Configure**.
5. Enter the configuration parameters according to the used eddy current sensor and the measuring task (see Configuration editor and parameters).
6. Start the calibration process, and select a calibration method (see Calibration).
   The configuration is sent to the converter during the calibration process.
   The configuration is automatically saved to the current project.
7. If a single file is needed, save the configuration (**Configuration editor** → **File** → **Save as**).
   The data of the calibration is saved with the configuration file. The data of the **Automatic calibration** and the **Offline calibration** (Easy calibration – calibration process without AMS Machine Studio) is saved as **Manual calibration** data.

Note
Before saving the configuration, reload the configuration including the calibration data from the AMS EZ 1000 Converter. See Reload.

8. Close AMS Machine Studio, and disconnect from the converter.
   After these steps, the converter is ready for operation.

8.2 Start of an offline configuration

Procedure

1. Select **Workspace** in the left part of the main view, then click **Item** → **Converter** → **EZ 1000 converter**.

Figure 8-3: Start new device configuration

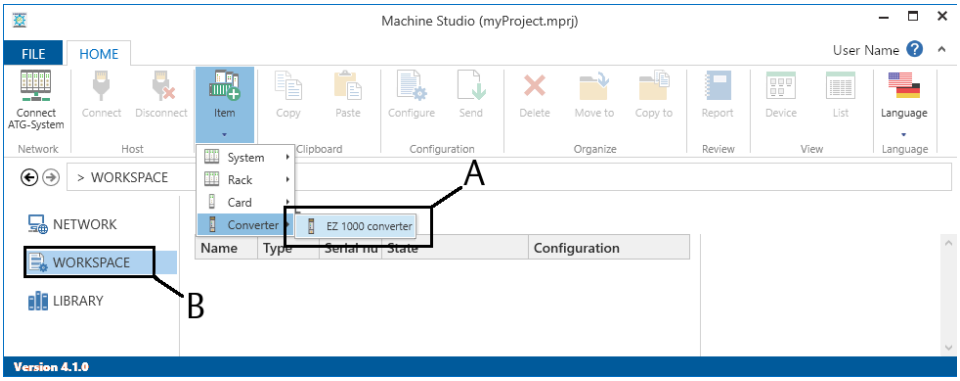

*A. Item **EZ 1000 converter***
B. Workspace

The AMS EZ 1000 Converter is added to the list below **Workspace**.

2. Select an **EZ 1000** from the **Workspace** list, and click **Configure**.

Figure 8-4: Select an AMS EZ 1000 Converter for offline configuration

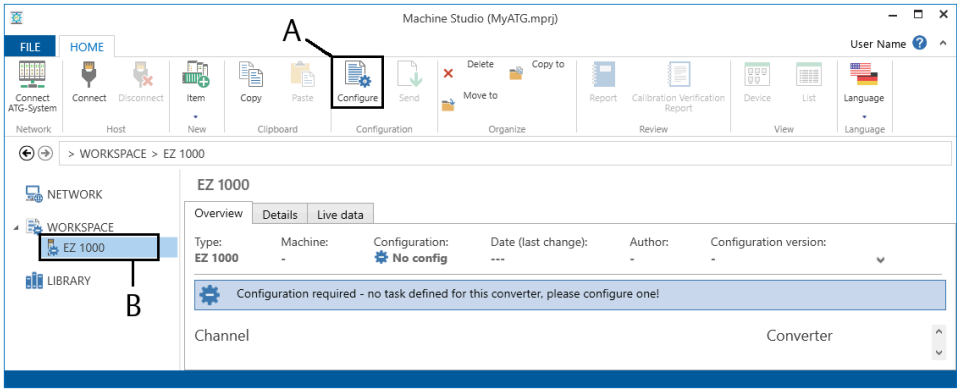

*A. Button **Configure** to open the configuration editor.*
B. New AMS EZ 1000 Converter.

The **New Configuration** dialog opens.

Figure 8-5: New Configuration dialog

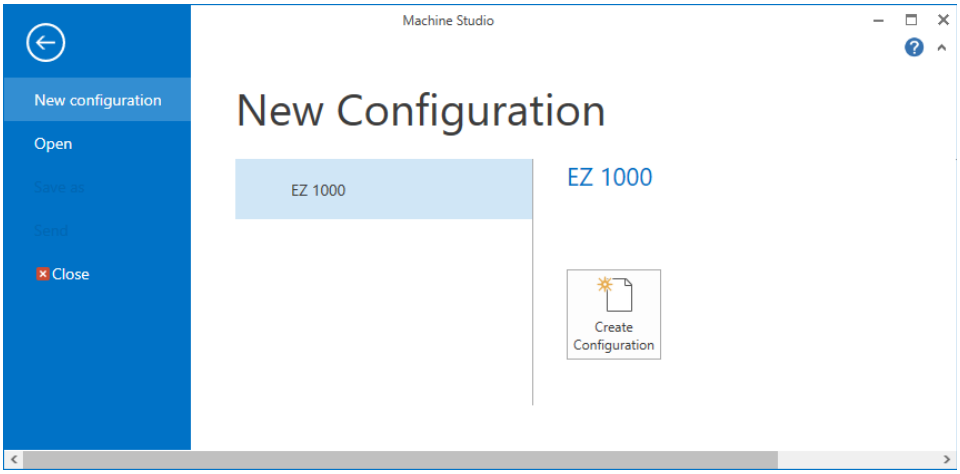

3. Select **EZ 1000**, and click **Create Configuration** to open the configuration editor.

   See Configuration editor and parameters for parameter description and settings.

Note
The calibration requires an online connection to the AMS EZ 1000 Converter. Move the converter configuration from **Workspace** by drag and drop to an already connected converter below **Network**. Complete the configuration.

8.3 Start of an online configuration

Procedure

1. Select the AMS EZ 1000 Converter from the **Network** list in the left part of the main view, then click **Configure**.

Figure 8-6: Select an AMS EZ 1000 Converter for online configuration

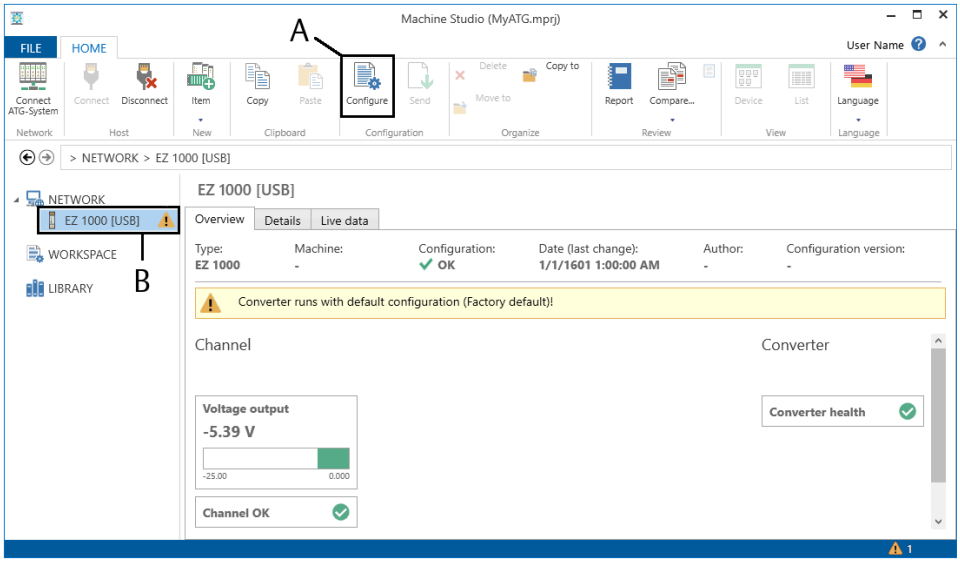

*A. Button **Configure** for opening the configuration editor.*
B. Selected AMS EZ 1000 Converter.

If the selected converter is not configured, the **New Configuration** dialog opens (see Start of an offline configuration). Otherwise, the configuration editor opens directly.

See Configuration editor and parameters for parameter description and settings.

2. Check the configuration, and modify it in accordance to the requirements.

8.4 Configuration of an already existing converter

Procedure

1. Select the converter to be reconfigured from the **Network** list.
2. Click **Configure** to open the configuration editor.
3. Make the changes to the configuration.
4. Run the calibration process. The configuration is sent to the converter during this process (see Calibration).
5. Click **Close configuration** to close the editor. Do not click **Send & close**.

8.5 Configuration editor and parameters

Figure 8-7 shows an overview about the configuration editor **Configuration**.

Figure 8-7: Configuration

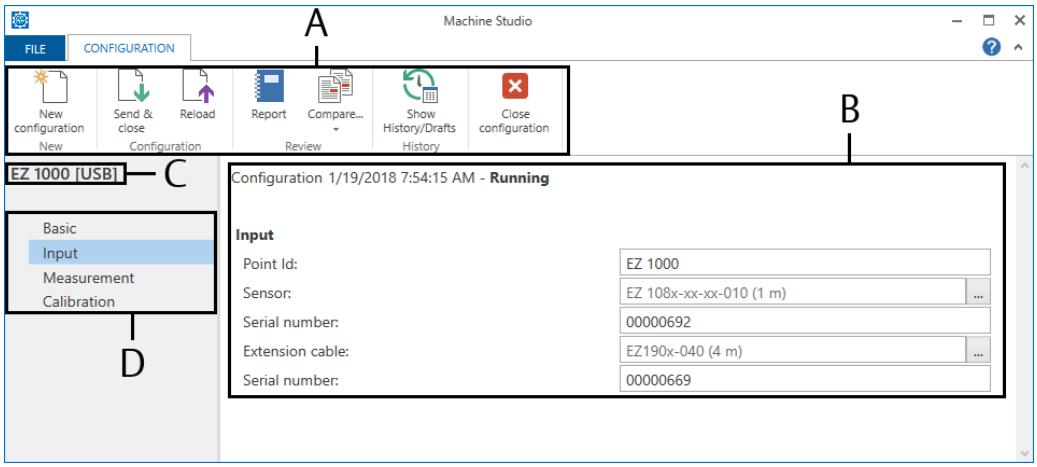

A. Ribbon command bar
B. Configuration dialog
C. Converter name with type of used interface in brackets
D. List of configuration pages

8.5.1 Ribbon command bar

New configuration

Click **New configuration** to start a new configuration with default parameters.

Figure 8-8: Button New configuration

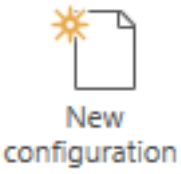

Send & close

Click **Send & close** to send the configuration to the converter. The configuration editor automatically closes after the sending process. This command requires an online connection to the converter.

Minor changes to the configuration can be sent without recalibration of the converter. Major changes require a recalibration. In this case, the configuration is sent by the calibration process.

Minor changes are:

- All parameters on the **Basic** tab.
- The parameters **Point Id**, **Serial number** of the sensor, and **Serial number** of the cable on tab **Input**.

Major changes are:

- The parameters **Sensor** and **Extension cable** on the **Input** tab.
- All parameters on the **Measurement** tab.

Figure 8-9: Button Send & close



Note
Send & close is disabled after major changes, which require a calibration of the converter, or if the calibration state of the converter is not OK (see Calibration state).

Reload

Click **Reload** to reload the configuration including the calibration data from the converter to the configuration editor. The data of the **Automatic calibration** and the **Offline calibration** (calibration process without AMS Machine Studio) is loaded as **Manual calibration** data. Use the report function to display the calibration data. Any configuration changes you made in AMS Machine Studio will be overwritten by the configuration loaded from the converter.

Figure 8-10: Button Reload



Compare

Click **Compare** to show differences between the configuration on the converter and in the memory of the used Laptop or PC.

Figure 8-11: Button Compare



Report

Click **Report** to open the report viewer. This report shows all configured parameters and some additional information, such as serial number and user information. This report can be exported to different formats, such as PDF, XPS, and Microsoft Excel, or it can be printed.

Figure 8-12: Button Report



Where required, change the logos in the header of the report:

1. Close the configuration editor. The configuration is automatically saved as a draft configuration.
2. Click **File** and then **Settings**.
   The **Settings** window opens.
3. Click the buttons with the dotted line within the **Report settings** area to browse for logos.
   Logos with file format **png** or **jpg** can be selected.
4. Click **OK** to confirm your settings.
   The window closes.
5. Open the configuration editor, and go back to the report.
   Now the report contains the selected logos.

Figure 8-13: General settings

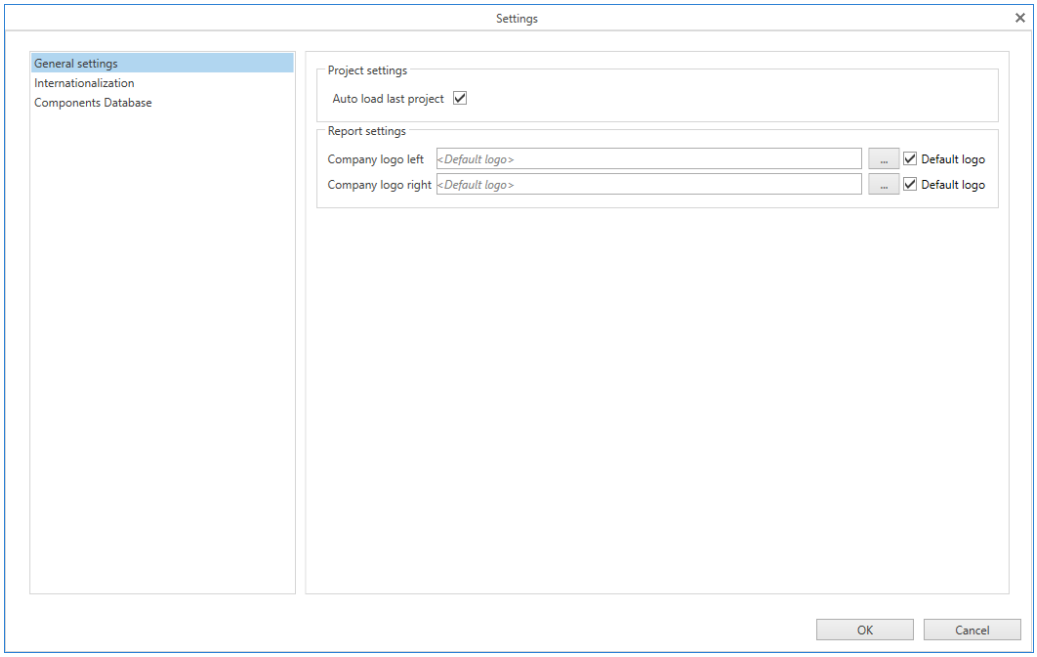

Show History/Drafts

Click **Show History/Drafts** to open the History.

Figure 8-14: Button Show History/Drafts

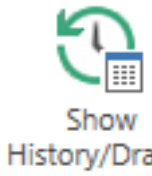

Figure 8-15: History

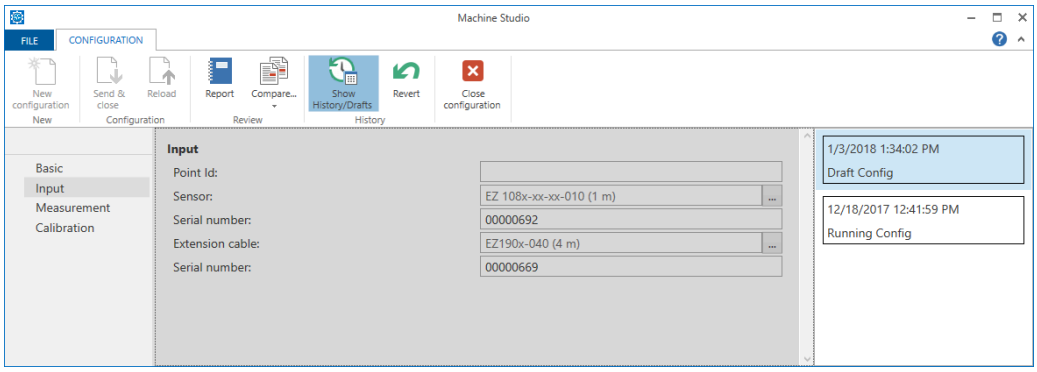

The right part of Figure 8-15 shows the configuration history. The individual files are marked with date, time, and type:

- **Draft Config**
  A saved preliminary configuration file which has not yet been sent to the converter.
- **Running Config**
  This configuration file is running on the connected converter.
- **Running Config (historic)**
  An old configuration file which was running in the past.

The editor area is grayed out. You can see the parameters of the historic files, but you can not change them. Parameters can only be changed in the editor. To copy a historic configuration to the editor:

1. Select a draft or historic file from the list.
   The parameters of the selected file are displayed in the grayed out editor area.
2. Click **Revert**. The selected file is copied to the editor, and the history window is closed. Click **Show History/Drafts** again, if you want to leave the history without any file copying.

Figure 8-16: Button Revert



Close configuration

Click **Close configuration** to leave the editor. Changes are automatically saved as a draft configuration. Use the history view to open saved draft configurations.

Figure 8-17: Button Close configuration

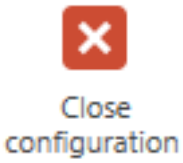

8.5.2 Basic

Enter general machine and plant information.

Figure 8-18: Basic



Name	Enter the converter name or a short description of the measurement.
Machine	Enter the machine designation.
Area	Enter a name or a short description of the area where the machine is located.
Plant	Enter the plant/factory name.
User	The name of the user who made the last configuration is displayed. The user name of the login data of the operation system is used for this automatic entry. It is not possible to change the content of this field.
Date (last change)	The date and time of the last converter configuration is displayed here. Time and date of the configuration PC is used. It is not possible to change the content of this field.
Configuration version	The version of AMS Machine Studio used to configure the AMS EZ 1000 Converter is displayed.

8.5.3 Input

Define the eddy current sensor to be connected.

Note
The change of the parameters **Sensor** and **Extension cable** of an already configured converter requires the recalibration of the converter.

Figure 8-19: Input

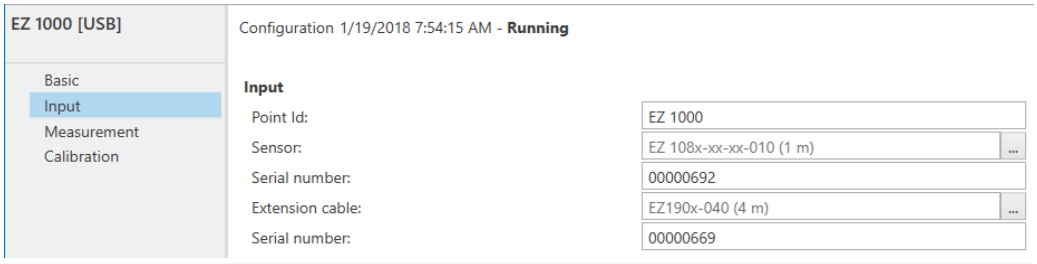

Point Id Enter the point ID of the measuring point where the sensor is installed.

Sensor Click the button ... behind the display field to open the selection dialog for the sensor. The dialog lists all eddy current sensors compatible with the AMS EZ 1000 Converter. Select the appropriate sensor, and click **OK**.

Note
Standard sensors with a predefined configuration for special applications are also available for selection:

EZ 108x Custom 001 Measurement application in which a measuring chain, consisting of the following components, is used to take measurements on a Tungsten Carbide target.

- AMS EZ 1000 Converter
- AMS EZ 1000 Sensor EZ108x
- System cable length: 5 m to 10 m

PR 6426 Custom 002 Measurement application in which a measuring chain, consisting of the following components, is used with an extended range factor of **4**.

- AMS EZ 1000 Converter
- PR6426 Sensor
- 10 meter sensor cable

If a sensor with a predefined configuration is selected, parameters that do not need to be configured are grayed out. For further information, see related application notes.

Serial number Enter the serial number of the used sensor. See sensor or sensor cable for the serial number.

Extension cable	If an extension cable is used, click the button ... behind the display field to open the selection dialog for the extension cable. The dialog lists all extension cables compatible with the AMS EZ 1000 Converter and the sensor already selected. Select the appropriate extension cable or select **No extension cable**, and click **OK**.
Serial number	Enter the serial number of the used extension cable. See label of the extension cable for the serial number.

Note
The sensor adapters EZ1900-003-ADAP-1 and EZ1900-003-ADAP-2 are automatically considered during the calibration process, if **Sensor → PR 6424**, **PR 6425**, **PR 6426**, or **3301x** is selected.

The overall cable length (sensor cable plus extension cable) of the selected components must be in whole numbers. An overall cable length of, for example, 5.5 meters cannot be selected.

When using the EZ1900-ADAP-90 adapter to connect an EZ108x-xx-xx-xxx sensor, ensure that the overall cable length is in the range of 4 to 10 meters.

8.5.4 Measurement

Enter the measurement details.

Note
The change of the measurement details of an already configured converter requires the recalibration of the converter.

Figure 8-20: Measurement

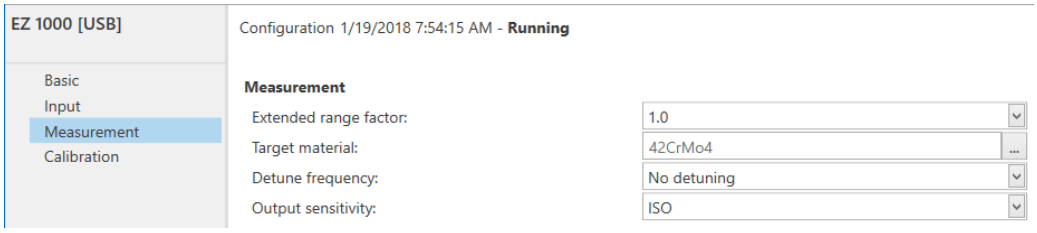

Extended range factor	The standard measuring range of several eddy current sensors can be extended. Use this list field to select a factor for the range extension. The available factors depend on the selected sensor (see **Input → Sensor**). The standard measuring range is multiplied with the selected factor. Example with EZ108x-xx-xx-xxx with standard range of 2.0 mm (absolute) and selected factor of 2.0: Extended range = Standard Range * Factor Extended range = 2.0 mm * 2.0 = 4.0 mm
Target material	Click the button ... behind the display field to open the selection dialog for the material of the measuring object. The measuring object is the machine part the sensor is facing, such as machine shaft, measuring collar, or trigger wheel. The dialog lists all materials contained in the components database.

Select the appropriate material, and click **OK**. See Components database – add a new target material how to add a missing target material to the component database. The target material can not be changed if **33010x** is selected for **Input** → **Sensor**. When using the EZ1900-ADAP-90 adapter to connect an EZ108x-xx-xx-xxx sensor, select **42CrMo4**.

⚠ CAUTION

This parameter is important for the linearity of the measurement. Ensure that the selected material matches to the material of the measuring object.

Detune frequency

Eddy current sensors mounted too closely together influence each other. Mutual influences of two measuring chains explains this mounting situation. In some cases, it is necessary to detune – changing of the oscillator frequency – one AMS EZ 1000 Converter. Use the list field to select a detune level. If detuning is activated, use the calibration method **Multipoint calibration**. Detuning can not be activated if **33010x** is selected for **Input** → **Sensor** and if an AMS EZ 1000 Sensor with a cable length of 15 m or 30 m is selected. When using the EZ1900-ADAP-90 adapter to connect an EZ108x-xx-xx-xxx sensor, select **No detuning**.

- **No detuning**
  No detuning.
- **Detune frequency low**
  Use this level to detune one converter if two sensors are mounted close together.

Output sensitivity

Select the output sensitivity.

- **ISO**
  The nominal output voltage range is -2 V to -18 V, which results in a voltage span of 16 V. The output sensitivity is the voltage span divided by the measuring range. Example with measuring range of 2 mm:
  16 V / 2 mm = 8 V/mm
- **API**
  The ISF (incremental scale factor) according to API 670 is 200mV/mil or 7.87 V/mm, which results in a slightly different voltage span of 15.74 V. The output sensitivity is the voltage span divided by the measuring range. Example with measuring range of 2 mm:
  15.74 V / 2 mm = 7.87 V/mm

8.5.5 Calibration

Enter the calibration parameters or start the automatic calibration. A wizard guides you through the calibration process.

The AMS EZ 1000 Converter provides several methods for the calibration. Table 8-1 lists the available calibration methods depending on sensor type, cable length, and detune frequency.

Table 8-1: Calibration methods

Sensor	Sensor cable length	System cable length[1]	Extended measuring range factor	Detune frequency	Calibration methods	
					Available	Recommended
EZ105x	0.5 m, 1.0 m, 5.0 m, 10.0 m	All length[2]	All ranges	No detuning	Manual Automatic Multipoint	Manual
	1.5 m, 2.0 m, 3.0 m	All length[2]	All ranges	No detuning	Automatic Multipoint	Automatic
	All length[2]	All length[2]	All ranges	Low	Multipoint	Multipoint
	All length[2]	15.0 m	1x	No detuning	Manual Automatic	Manual
EZ108x	All lengths[2]	5.0 m and 10.0 m	1x	No detuning	Manual Automatic Multipoint Offline (Easy)	Automatic (42CrMo4) Manual (Other materials)
	0.5 m, 1.0 m, 5.0 m, 10 m	All length[2]	All ranges	No detuning	Manual Automatic Multipoint	Manual
	1.5 m, 2.0 m, 3.0 m	All length[2]	All ranges	No detuning	Automatic Multipoint	Automatic
	All length[2]	All length[2]	All ranges	Low	Multipoint	Multipoint
	All length[2]	15.0 m and 30.0 m	1x	No detuning	Manual Automatic	Manual
PR 6424	All lengths[2]	All lengths[2]	All ranges	No detuning or low	Multipoint	Multipoint
PR 6425	All lengths[2]	All lengths[2]	All ranges	No detuning or low	Multipoint	Multipoint
PR 6426	All lengths [2]	All lengths[2]	All ranges	No detuning or low	Multipoint	Multipoint
BN 33010x-xx-xx-yy[3]-xx-xx	All lengths[2]	5.0 m and 9.0 m	1x	Low[4]	Multipoint	Multipoint

1 *Sensor cable plus extension cable*
2 *All permitted cable length*
3 *yy: 10, 50, or 90*
4 *Preselected*

The calibration dialog depends on the selected calibration method.

Note
The sensor data is sent to the AMS EZ 1000 Converter at the beginning of the calibration methods **Automatic calibration** or **Multipoint calibration**. Before starting the calibration

process, ensure that the dialogs **Input** and **Measurement** have been completed in accordance to the requirements of the measurement and the used sensor.

⚠ CAUTION

Connections to external devices may be interrupted when sending configurations.
The output voltage of the AMS EZ 1000 Converter is set to > -1.5 V during this process.

Figure 8-21: Calibration

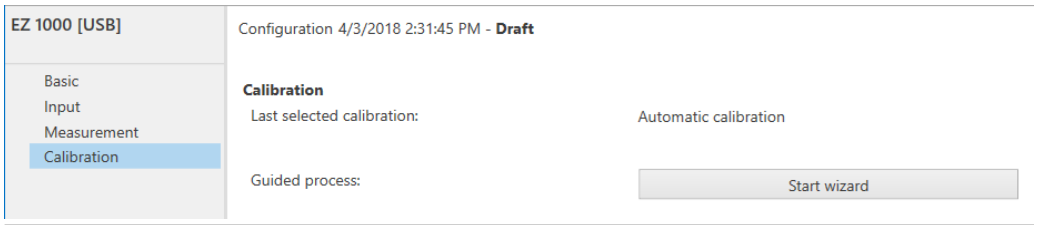

Last selected calibration The calibration method used before is displayed here.

Guided process

1. Click **Start wizard** to start the guided calibration process.
   The dialog for selecting the calibration method opens.

   Note
   The guided process requires an online connection to the AMS EZ 1000 Converter (see Online configuration overview).

2. Select the calibration method.
   - **Manual calibration**
     Use this method if the calibration data is known. Sensors or extension cables for which the calibration data is known have this data attached. See Figure 8-24 and Figure 8-25.
     Sensors or extension cables for which the calibration data is not known are labeled as shown in Figure 8-22.

     Figure 8-22: Label – no calibration data

     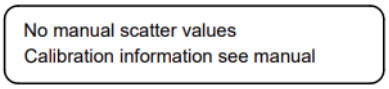

     In this case use calibration method **Automatic calibration** or **Multipoint calibration**.
   - **Automatic calibration**
     Use this method for EZ105x-xx-xx-xxx and EZ108x-xx-xx-xxx sensor types.
   - **Multipoint calibration**

Use this method for third party sensors, for a configuration with activated detuning (**Measurement → Detune frequency**), or to recalibrate an already calibrated measuring chain.

Depending on the selected sensor (**Input → Sensor**), a calibration method is recommended. The recommended method is marked with **(Recommended)**.

- The calibration method is fixed to **Multipoint calibration** if **33010x** is selected for **Input → Sensor** or the detuning is activated (**Measurement → Detune frequency**).
- The calibration method **Manual calibration** cannot be selected if an EZ105x or an EZ108x sensor with 1.5 m or 2.0 m cable length is elected for **Input → Sensor**.
- The calibration methods **Automatic calibration** and **Manual calibration** cannot be selected if **PR 6424**, **PR 6425**, or **PR 6426** is selected for **Input → Sensor**.

3. Click **Next** to continue with the process.
   See Manual calibration – guided process, Automatic calibration – guided process, or Multipoint calibration – guided process for details.

Manual calibration – guided process

The process steps after the selection of the calibration method are described below.

Procedure

1. Enter the calibration data.

Figure 8-23: Manual calibration

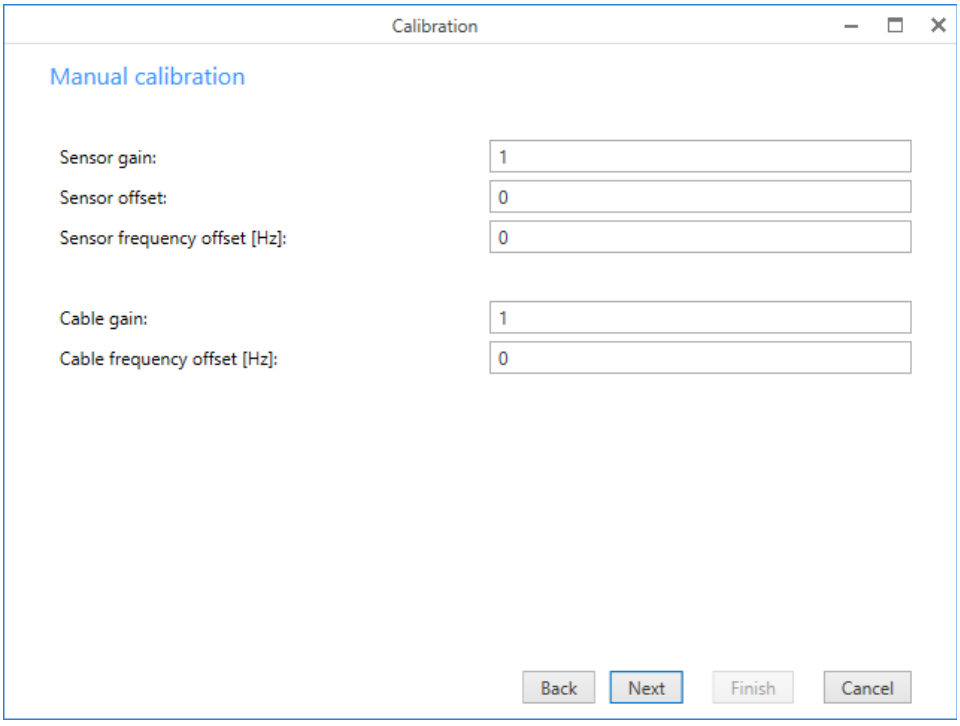

Sensor gain

Enter the sensor gain. See Figure 8-24 where to find the data if using an EZ105x or an EZ108x sensor. The abbreviation for the sensor gain on the label is **SG**.

Figure 8-24: Location sensor data



A. Label with sensor calibration data
B. Label with sensor type and serial number.

Sensor offset

Enter the sensor offset. See Figure 8-24 where to find the data if using an EZ105x or an EZ108x sensor. The abbreviation for the sensor offset on the label is **SO**.

Sensor frequency offset [Hz]

Enter the frequency offset. See Figure 8-24 where to find the data if using an EZ105x or an EZ108x sensor. The abbreviation for the sensor frequency offset on the label is **SFO**. When using the EZ1900-ADAP-90 adapter to connect an EZ108x-xx-xx-xxx sensor, add **450 Hz** to the sensor frequency offset stated on the label to compensate for the adapter influence on the calibration.

Cable gain Enter the gain of the extension cable. See Figure 8-25 where to find the data on the cable. The abbreviation for the cable gain on the label is **CG**. When using the EZ1900-ADAP-90 adapter to connect an EZ108x-xx-xx-xxx sensor, add **0.001** to the cable gain stated on the label to compensate for the adapter influence on the calibration.

Figure 8-25: Location extension cable data



A. Label with extension calibration data
B. Label with extension cable type and serial number.

Cable frequency offset Enter the frequency offset of the extension cable. See Figure 8-25 where to find the data on the cable. The abbreviation for the cable frequency offset on the label is **CFO**.

2. Click **Next**.

   The dialog for sending the configuration opens.

3. Click **Next** to send the configuration to the AMS EZ 1000 Converter.

   ⚠ CAUTION

   Connections to external devices may be interrupted when sending configurations. The output voltage of the AMS EZ 1000 Converter is set to > -1.5 V during this process.

   The sending progress is displayed.

4. Click **Next**.
5. Click **Finish** to exit the wizard.
6. Click **Close configuration** to exit the configuration editor. Do not click **Send & close**.

Automatic calibration – guided process

The process steps after the selection of the calibration method are described below.

Note
Wait 60 seconds after powering up the AMS EZ 1000 Converter or after a firmware update before starting the automatic calibration.

Prerequisites

The sensor is not installed in the machine. If the EZ1900-ADAP-90 adapter is used, ensure that the adapter is installed before starting the calibration process.

Procedure

1. Click **Next** to send the already entered configuration data to the AMS EZ 1000 Converter.

   ⚠ CAUTION

   Connections to external devices may be interrupted when sending configurations. The output voltage of the AMS EZ 1000 Converter is set to > -1.5 V during this process.

   The sending progress is displayed.

2. Click **Next**.
3. Follow the instructions of the wizard.
   The program calculates the necessary calibration data. The progress is displayed.
4. Click **Finish** to exit the wizard.
5. Click **Close configuration** to exit the configuration editor. Do not click **Send & close**.

Multipoint calibration – guided process

The process steps after the selection of the calibration method are described below.

Prerequisites

- Calibration gauge (for example CAL 064) with micrometer screw gauge and material sample that matches the material of the measuring object (machine shaft).
- -24 V DC power supply, if the converter is not supplied by a measuring amplifiers such as an A6500-UM.
- USB cable
- Sensor is not installed in the machine.
- If the EZ1900-ADAP-90 adapter is used, ensure that the adapter is installed before starting the calibration process.

The starting point for the calibration – maximum gap between measuring target and sensor including the initial air gap [5] – depends on the selected sensor type. Table 8-2 lists the starting points depending on the sensor and the configured extended range factor (**Measurement → Extended range factor**). The initial air gap[5] for EZ105x and 33010x sensors is 0.25 mm and for EZ108x sensors 0.5 mm. The initial air gap[5] for PR 6424, PR 6425, and PR 6426 sensors depends on the measuring range.

Table 8-2: Start point

Sensor	Starting point (maximum distance between measuring target and sensor)			
	Extended range factor 1.0	Extended range factor 1.5	Extended range factor 2.0	Extended range factor 3.0
EZ105x	1.25 mm	1.75 mm	2.25 mm	---
EZ108x	2.5 mm	3.5 mm	4.5 mm	---
PR 6424	4.7 mm	---	8.9 mm	13.1 mm
PR 6425				
PR 6426	9.0 mm	---	17.4 mm	25.8 mm
33010x	2.25 mm	---	---	---

Procedure

1. Click **Next** to send the already entered configuration data to the AMS EZ 1000 Converter.

   ⚠ CAUTION

   Connections to external devices may be interrupted when sending configurations. The output voltage of the AMS EZ 1000 Converter is set to > -1.5 V during this process.

   The sending progress is displayed.

5 *Non-linear range at the beginning of the total measuring range of the sensor, before the beginning of the linear measuring range.*

2. Click **Next**.

   Step 1 and Step 2 are skipped if an already configured converter is connected and the parameters of the dialogs **Basic**, **Input**, and **Measurement** are unchanged.

3. Enter the expected temperature at the sensor mounting location as exact as possible. If sensor and converter have the same temperature, use the button M in the dialog to measure the internal temperature of the converter. This step is only necessary if an EZ105x or an EZ108x sensor is connected to the AMS EZ 1000 Converter.

Figure 8-26: Dialog – sensor temperature

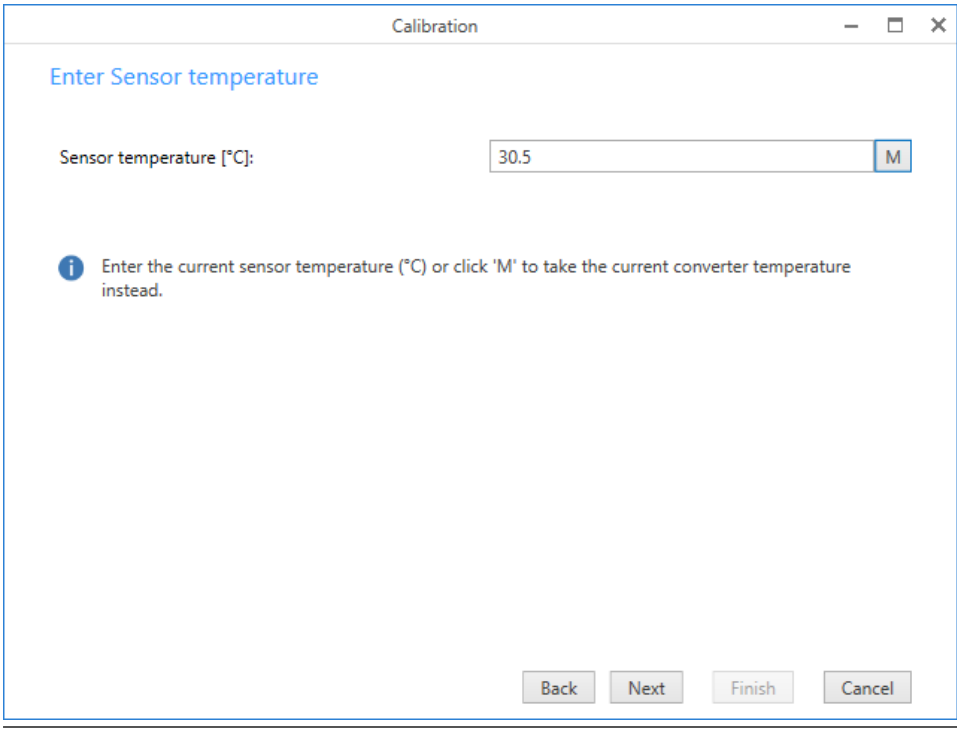

4. Mount the sensor into the calibration gauge.
5. With the micrometer screw, adjust the distance between measuring object and sensor tip to the maximum gap stated in row B of Figure 8-27. The distances in column **[mm]** can not be changed here and depend on the selected sensor and the extended range factor (see Table 8-2).

Figure 8-27: Multipoint calibration

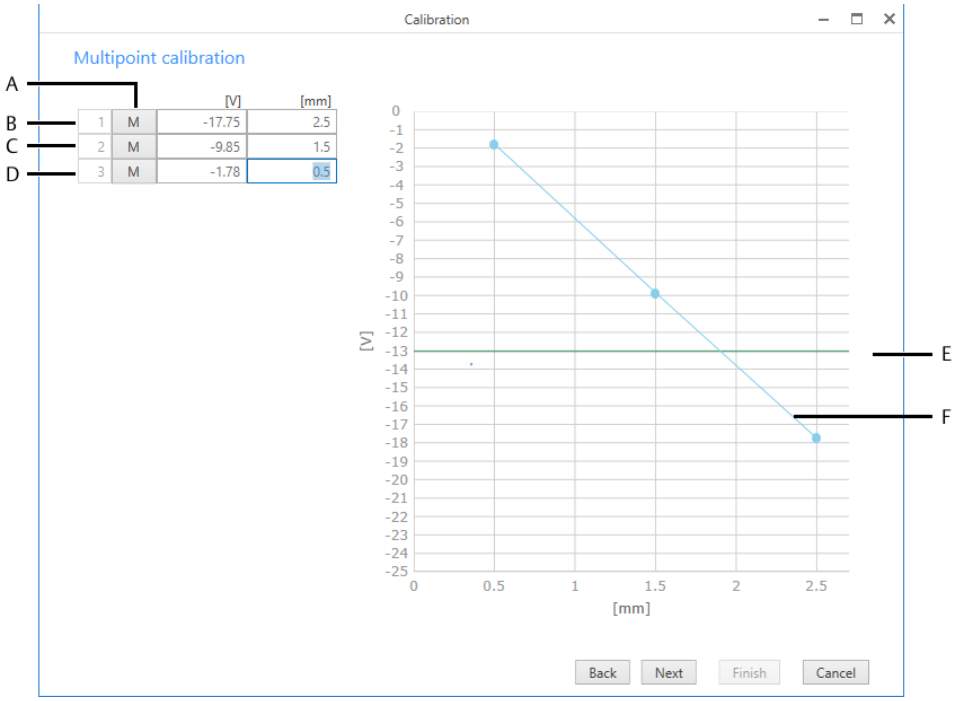

A. Buttons for measurement of converter output voltage.
B. Calibration point for the end of the measuring range (greatest distance between sensor and measuring object).
C. Calibration point for the center of the measuring range.
D. Calibration point for the beginning of the measuring range (smallest distance between sensor and measuring object).
E. Indication of the current output voltage of the connected converter.
F. Calibration curve as a result of the calibration points.

Rows C and D are disabled until the measurement for the starting point has been made (row B).

6. Click the measuring button M in row B to measure the output voltage of the converter.

   This process can take several minutes.

   The measured voltage (approximately -18 V) is entered into the related field of column **[V]**.

7. With the micrometer screw, adjust the distance between measuring object and sensor tip to the center of the measuring range stated in row C of Figure 8-27.

8. Click the measuring button M in row C to measure the output voltage of the converter.

   This process can take several minutes.

   The measured voltage (approximately -10 V) is entered into the related field of column **[V]**.

9. With the micrometer screw, adjust the distance between measuring object and sensor tip to the minimum gap stated in row D of Figure 8-27.
10. Click the measuring button in row D to measure the output voltage of the converter.

    This process can take several minutes.

    The measured voltage (approximately -2 V) is entered into the related field of column **[V]**.
11. Click **Next**.
12. Click **Next** to send the calibration table to the AMS EZ 1000 Converter.

    ⚠ CAUTION

    Connections to external devices may be interrupted when sending configurations. The output voltage of the AMS EZ 1000 Converter is set to > -1.5 V during this process.

    The calibration and sending progress is displayed.
13. Click **Next**.
14. Click **Finish** to exit the wizard.
15. Click **Close configuration** to exit the configuration editor. Do not click **Send & close**.

8.6 Send and Reload a configuration

8.6.1 Send a configuration

⚠ CAUTION

Connections to external devices may be interrupted when sending configurations. The output voltage of the AMS EZ 1000 Converter is set to > -1.5 V during this process.

The configuration is generally sent during the calibration process. Use **Send & close** to send minor changes to the configuration or configuration files loaded into AMS Machine Studio to the converter.

Procedure

1. Ensure that there is an online connection between the AMS EZ 1000 Converter and AMS Machine Studio.

   AMS Machine Studio will automatically establish an online connection to the AMS EZ 1000 Converter as soon as there is a physical connection through the USB port.
2. Click **Send & close** in the ribbon command bar to send the configuration to the AMS EZ 1000 Converter. The configuration editor automatically closes after the sending process.

A successfully sent configuration will be indicated by a message in the upper right corner of the software window. This message window will automatically disappear. Otherwise close it by clicking on the cross.

The converter is ready to use when the sensor is connected, the converter output voltage is within the OK range, and the green **OK** LED on the converter front shows a steady light.

Note
After sending a configuration the configuration becomes active immediately – this is indicated by AMS Machine Studio and a steady green LED on the converter front. The output of the AMS EZ 1000 Converter is activated 25 seconds after the sending process.

8.6.2 Reload a configuration

Once an online connection has been established, the configuration of the AMS EZ 1000 Converter is automatically loaded to AMS Machine Studio. Click **Reload** in the ribbon command bar if the configuration and the calibration data must be loaded again.

8.7 Offline (Easy) calibration

⚠ CAUTION

Any work on the system may impair machine protection.

The AMS EZ 1000 Converter can be calibrated on EZ108x sensors with 5 m or 10 m sensor cable without using AMS Machine Studio, provided that the material of the measuring object is 42CrMo4.

Note
The offline calibration requires an AMS EZ 1000 Converter with factory default settings (delivery state). If uncertain about the calibration state, use the online view of AMS Machine Studio (see Details) to check the current calibration type of the converter – **Auto**, **Easy**, or **Manual**. Factory default settings are also indicated by a continuously triple flashing of the LED (see Table 3-1).

Reset an already configured AMS EZ 1000 Converter to the factory default settings by using AMS Machine Studio (see Reset to factory default) before starting the offline calibration procedure.

An already offline (easy) calibrated AMS EZ 1000 Converter can be offline calibrated again without resetting the converter to factory default.

Prerequisites

- -24 V DC power supply, if the converter is not supplied by a measuring amplifiers such as an A6500-UM Universal Measuring Card.
- AMS EZ 1000 Converter with factory default settings.
- EZ108x sensor with 5 m or 10 m sensor cable.

- Suitable tool for pressing the calibration button such as a 2 mm screw driver or a pen.
- Material of the measuring object: 42CrMo4
- Sensor is not installed in the machine.

Procedure

1. Connect the sensor to the AMS EZ 1000 Converter (see Sensor connection).
2. Connect the power supply if not already done (see Power supply and output signal connection).
3. Switch on the power supply.

Note
Wait 60 seconds after powering up the AMS EZ 1000 Converter or after a firmware update before starting the calibration process.

4. Take the sensor and hold it straight up into the air – away from ferro magnetic materials.
5. With a suitable tool, press and hold the button on the front of the AMS EZ 1000 Converter to start the calibration process. The green LED starts flashing. See Figure 8-28 for location of the button and the LED. Hold the button until the LED changes the flashing pattern to double flashing.

Figure 8-28: LED and button location

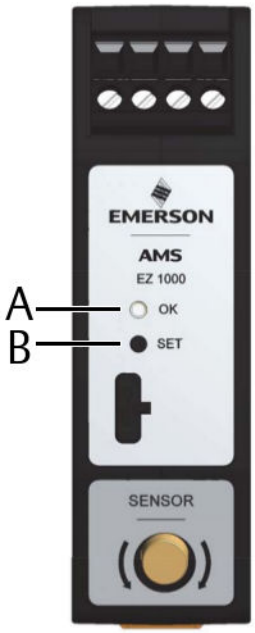

*A. Green LED (**OK**)*
*B. Calibration button (**SET**)*

6. To complete the calibration, release the button. The calibration process starts and the double flashing of the LED continues for five seconds.

The calibration is finished when the LED stops double flashing, and the light is constantly green.

Note
If a fault has been detected during the process or if the converter has been already calibrated with AMS Machine Studio, the calibration is stopped, and the LED flashes fast (5 Hz) until the AMS EZ 1000 Converter is powered off and on again. The existing calibration of the converter remains unchanged.

7. Mount the sensor (see Mounting).

8.8 Components database – add a new target material

The target materials, available in the components database, are listed in the component selection dialog of the configuration editor. If the required target material is not listed in the selection dialog, follow the steps to add it to the components database.

⚠ CAUTION

Before adding a new target material to the components database, ensure that the required material data is known, as the material has an influence on the accuracy of the measurement.
For additional target material data, contact Product Support. If required, Product Support will ask you to send in a sample of the target material to determine the material data. The thickness of the sample should be not less than 5 mm and the diameter not less than 80 mm.

Procedure

1. Contact Product Support (see Technical support) to obtain target material data.
2. Start AMS Machine Studio, and go to **File** → **Settings**.
3. Select **Components Database**, and click **Add**.
   The dialog for the selection of the components type opens.
4. Select **Material**, and click **Next**.
   The dialog for entering the material data opens.
5. Enter a name for the material and the data from the already downloaded material data list. Click **Next**.

   Note
   Starting with AMS Machine Studio 3.5, the input range for **Sensitivity** is reduced to 0.9 to 1.025. Values outside the permissible range are not accepted. Materials with a sensitivity outside the new permissible range added before the range change can still be used. An error message appears, but the material data are properly sent to the AMS EZ 1000 Converter.

   The confirmation dialog opens.
6. Check your entries, and place a checkmark in the box **Data is correct** to confirm the correctness of the entries. Click **Finish**.

Note
Once entered into the database, the material data cannot be changed, only deleted.

The new target material is added to the components database and available for the converter configuration.

Related information

Technical support

9 Online View

After connecting AMS Machine Studio with an AMS EZ 1000 Converter, the Online View of the converter appears.

Figure 9-1: Online View – overview

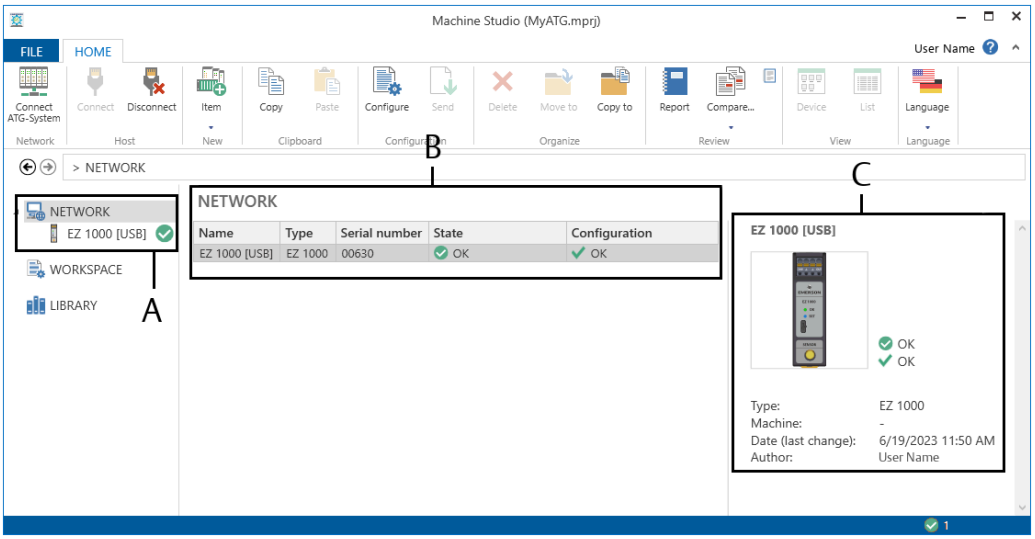

A. Connected devices in the device tree
B. List of connected AMS EZ 1000 Converter
C. A few details of the converter selected from the list.

To open the Online View of a specific AMS EZ 1000 Converter, double-click it in the list, or click it in the device tree. The Online View of the selected AMS EZ 1000 Converter opens. This view contains three tabs **Overview**, **Details**, and **Live data**. Several general details about the converter, the location of the converter and the configuration are shown at the top of each online view page.

Figure 9-2: Online View

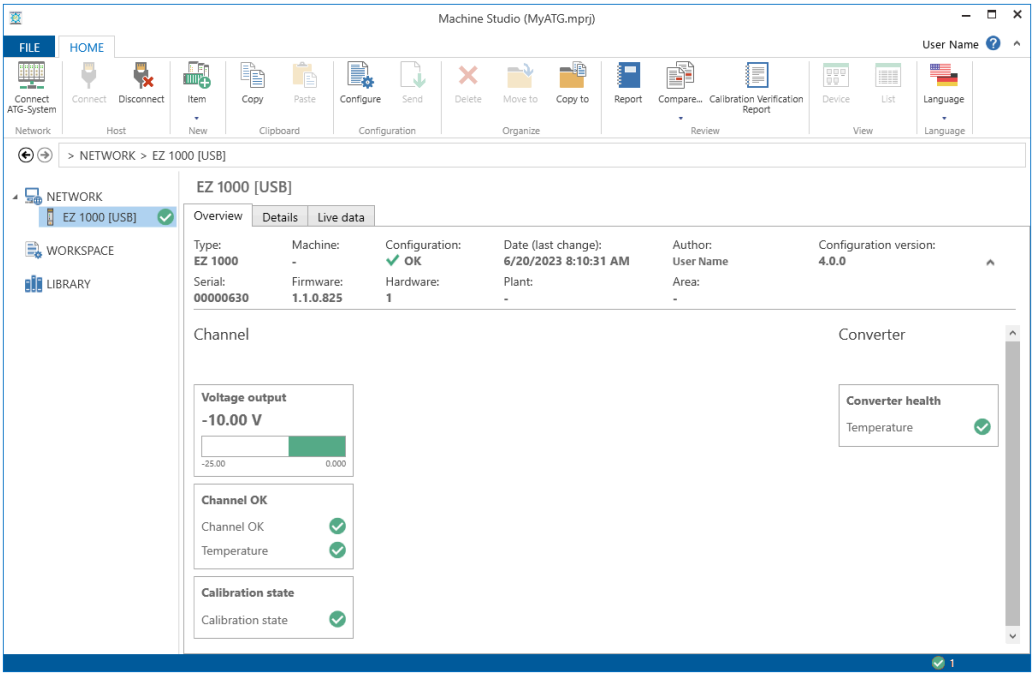

9.1 Overview

Overview contains several graphic objects to provide an overview about the converter status.

Channel OK

This graphic object displays the converter state.

Figure 9-3: Channel OK – expanded object

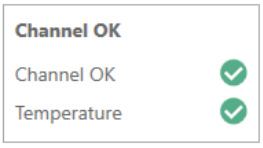

- A fault-free converter is indicated with a checkmark within a green solid circle.
- A faulty converter is indicated with a yellow warning triangle.

Click on **Channel OK** to expand the object, and get more information about the converter state.

Table 9-1: Flags Channel OK

Flag	Meaning		Action
Channel OK		No fault detected.	---

Table 9-1: Flags Channel OK *(continued)*

Flag	Meaning		Action
	⚠	Sensor or converter fault detected.	Check sensor and converter including wiring and connections
		Sensor is too close to the measuring target.	Check the distance between sensor and measuring target and readjust the sensor. See Sensor supervision.
Temperature	✓	The temperature, measured by the internal sensor is within the OK range of -35°C to 85°C.	---
	⚠	The temperature, measured by the internal temperature sensor, is out of the OK range of -35°C to 85°C	Take appropriate measures to reduce the environmental temperature.

Voltage output

This graphic object displays the DC part of converter output voltage. This voltage is proportional to the distance between sensor and measuring object.

Figure 9-4: Voltage output

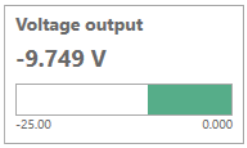

Calibration state

This graphic object displays the state of the calibration.

Figure 9-5: Calibration state – expanded object



- A fault- free calibration is indicated with a checkmark within a green solid circle ✓.
- A faulty calibration is indicated with a yellow warning triangle ⚠.

Click on **Calibration state** to expand the object.

Table 9-2: Calibration state flags

Flag	Meaning		Action
Calibration state	✓	Calibration is OK.	---
	⚠	No calibration.	Calibrate the converter.

Table 9-2: Calibration state flags *(continued)*

Flag	Meaning		Action
		The Easy calibration or Automatic calibration is not OK	Repeat the Easy or Automatic calibration. If this is not successful, calibrate the converter with the Manual Manual calibration – guided process or Multipoint Multipoint calibration – guided process calibration.

Converter health

This graphic object displays the converter health.

Figure 9-6: Converter health – expanded object



- A fault-free converter is indicated with a checkmark within a green solid circle.
- A faulty converter is indicated with a yellow warning triangle.

Click on **Converter health** to expand the object, and get more information about the converter health.

Table 9-3: Converter health flags

Flag	Meaning		Action
Temperature		The temperature, measured by the internal sensor is within the OK range of -35°C to 85°C.	---
		The temperature, measured by the internal temperature sensor, is out of the OK range of -35°C to 85°C	Take appropriate measures to reduce the environmental temperature.

9.2 Details

Details provides more detailed status information of the converter. The graphic objects **Converter health**, **Channel OK**, **Voltage output**, and **Calibration state** are described in Overview.

Figure 9-7: Details

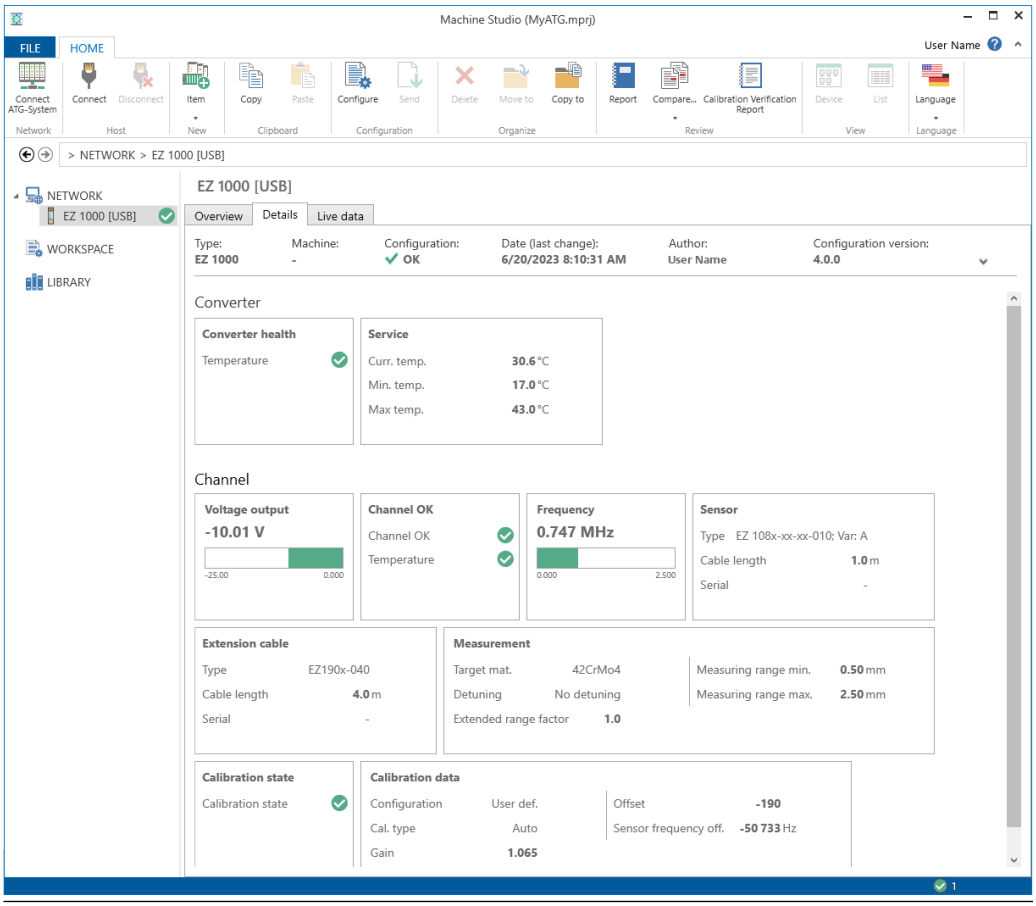

Service

This graphic object displays temperatures measured by the internal temperature sensor.

Figure 9-8: Service



Curr. temp.	Current temperature of the converter.
Min. temp.	Minimum temperature of the converter.
Max. temp.	Maximum temperature of the converter.

Measurement

This graphic object displays measurement related data.

Figure 9-9: Measurement

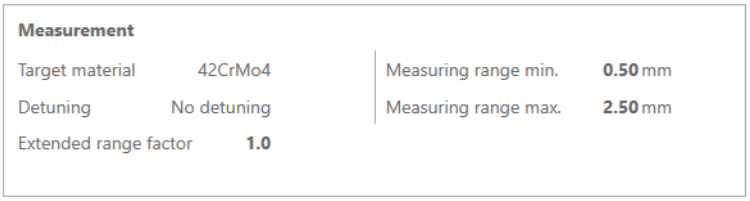

Target material	Material of the measuring object entered in the configuration (see Measurement).
Detuning	Displays the selected detuning level (see Measurement).
Extended range factor	Configured factor for the measuring range extension (see Measurement).
Measuring range min.	The beginning of the configured measuring range depends on the selected sensor type and the factor for the measuring range extension (see Measurement).
Measuring range max.	The end of the configured measuring range depends on the selected sensor type and the factor for the measuring range extension (see Measurement).

Frequency

This graphic object displays the frequency of the oscillator circuit of the converter. The frequency depends on the connected sensor type, the cable length of the sensor, and whether detuning is activated or not (**Measurement → Detune frequency**).

Figure 9-10: Frequency

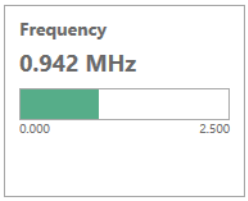

Sensor

This graphic object displays general sensor data.

Figure 9-11: Sensor

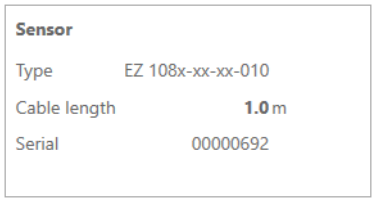

Type	Configured sensor type.

Cable length	Cable length of the configured sensor type.
Serial	Serial number of the sensor entered in the configuration (see Input).

Extension cable

This graphic object displays general extension cable data.

Figure 9-12: Extension cable

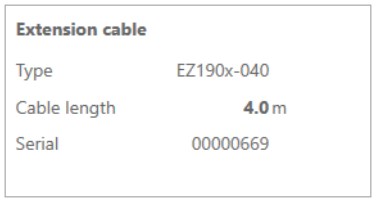

Type	Configured extension cable type.
Cable length	Length of the configured extension cable.
Serial	Serial number of the extension cable entered in the configuration (see Input).

Calibration data

This graphic object displays configured and determined calibration data.

Figure 9-13: Calibration data



Configuration	Indicates the configuration state. • **Not available**: State is not available. • **Factory def.**: Converter has the factory default configuration (delivery state). • **User def.**: Converter has a user defined configuration.
Cal. type	Indicates the calibration type. • **Not available**: Calibration state is not available. • **Auto**: The converter has been calibrated with the **Automatic calibration** function. • **Easy**: The converter has been calibrated with the **Offline calibration** function.

- **Manual**: The converter has been calibrated with the **Manual calibration** function.
- **Multipoint**: The converter has been calibrated with the **Multipoint calibration** function.

See Calibration and Offline (Easy) calibration for details.

Gain	Value which has been determined for the gain during the calibration process.
Offset	Value which has been determined for the offset during the calibration process.
Sensor frequency offset	Value which has been determined for the sensor frequency offset during the calibration process.

9.3 Live data

Live data displays continues online data. The trend diagram shows the last five minutes. The trend **Voltage** displays the DC voltage part of the converter output signal. The trend **Frequency** displays the oscillator frequency of the converter.

Figure 9-14: Live data



Each diagram has several controlling elements:

Region zoom

Use this function to enlarge an interesting part of the diagram.

1. Click the icon to activate the function. The button is colored light blue if the function is activated.
2. Place the mouse cursor close to the area of interest.
3. Left-click and hold.
4. Move the mouse to frame the area of interest.
5. Release the mouse button to enlarge the selected area.

Right-click somewhere on the diagram to reset the view change.

Move

Use this function to move the entire diagram view.

1. Click the icon to activate the function. The button is colored light blue if the function is activated.
2. Left-click an arbitrary point in the diagram and hold.
3. Move the view to the desired position.
4. Release the mouse button to place the view at that point.

Right-click somewhere on the diagram to reset the view change.

Zoom in

Use this function to stepwise enlarge the diagram view at mouse position.

1. Click the icon to activate the function. The button is colored light blue if the function is activated.
2. Left-click an arbitrary point in the diagram. At every click, the view is enlarged.

Right-click somewhere on the diagram to reset the view change.

Zoom out

Use this function to stepwise reduce the diagram view at mouse position.

1. Click the icon to activate the function. The button is colored light blue if the function is activated.
2. Left-click an arbitrary point in the diagram. At every click, the view is reduced.

Right-click somewhere on the diagram to reset the view change.

Cursor

Use the cursor within the diagram to display single values of the trend line. The cursor function is activated as soon as the mouse is within the diagram view.

Figure 9-15: Cursor

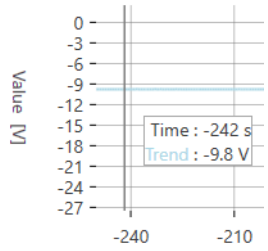

9.4 Online commands

After the AMS EZ 1000 Converter is configured and operating, you can issue converter specific commands to the converter from the Online View.

Note
Ensure that there is an online connection to the converter before using these commands.

Figure 9-16: Converter specific command buttons

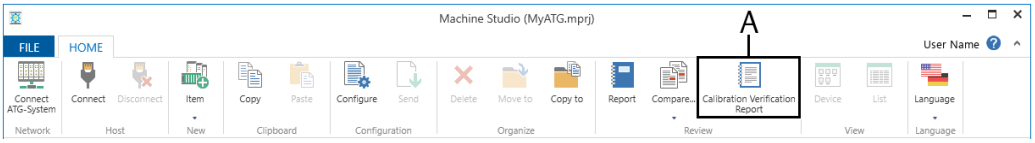

A. ***Calibration Verification Report*** *button*

Calibration Verification Report

Use this function to verify the calibration of an already configured and calibrated measuring chain consisting of an AMS EZ 1000 Converter with connected sensor.

A verification tool such as a CAL 064 with a micrometer screw gauge and a material sample that matches the material of the measuring object (machine shaft) is required for the verification.

1. Ensure that the sensor is connected to the converter, the converter is powered, and there is an online connection to the converter.
2. Mount the sensor into the verification tool.
3. Select **Network** → **EZ 1000**
4. Click **Calibration Verification Report** to open the dialog for verifying the calibration of the connected AMS EZ 1000 Converter.
5. The dialog opens with the page **Create a new calibration verification report**. Complete the information and click **Next**.
6. Select the measuring device:

Converter and Machine Studio	Select **Converter and Machine Studio** to measure the converter output voltage without an additional measuring device, directly in the **Calibration Verification Report** dialog – button **Measure**.
Voltmeter	Select **Voltmeter** to measure the converter output voltage with a voltmeter for manual entry of the measured values into the report. Connect a calibrated voltmeter to the output terminals ⊥ and **Out**, see Power supply and output signal connection for details. This is the recommended procedure to get a calibration verification report with a higher accuracy.

Click **Next**.

7. Follow the instructions in the dialog.

10 Maintenance, fault finding, and repair

10.1 Maintenance

During operation, the AMS EZ 1000 Converter does not require any maintenance.

10.2 Hints for fault finding

⚠ CAUTION

Any work on the system may impair machine protection.

For quick fault finding, Emerson recommends connecting an identical sensor to the converter temporarily. If the tip of the sensor is moved to a metallic target, the output voltage of the converter must change from approximately -18 V to -2 V.

The converter output voltage is a useful indicator for the cause of a faulty measuring chain. Measure the output voltage with a DC voltmeter at the output terminals **OUT** and ⊥. Table 10-1 shows converter output voltages and their possible cause or meaning.

Table 10-1: Meaning of converter output voltages

Converter output voltage	Meaning / Error
-18 V to -22 V	Distance between sensor and measuring object (shaft, measuring collar) is too large.
-2 V to -18 V	Output voltage range. Measuring chain is OK.
-10 V	Center of the output voltage range. Measuring chain is OK.
-1 V to -2 V	Distance between sensor and measuring object (shaft) is too small.
	Sensor damaged, cable break, or open connection.
-1.5 V	Sensor OK limit. See Sensor supervision for details.
0 to -1 V	Converter is defective.
	No supply voltage.
Output voltage range is not properly scaled on the measuring range of the connected sensor.	Converter is not calibrated on the connected sensor.

Eddy current sensors consist of a low impedance coil, so use a resistance measurement to detect a break in the sensor cable.

The sensor cable shield must be isolated from the converter housing, from the metal protection tube, and from the housing of the LEMO connector. A possible error source could be a missing or incorrectly shrunken shrink sleeve at the adapter between sensor and extension cable.

Also, use AMS Machine Studio to get an overview of the converter state. See Online View for details.

10.3 Replace an AMS EZ 1000 Converter

It is not possible to repair a defective AMS EZ 1000 Converter. In case of defects, the converters must be replaced. Follow the steps listed below if an AMS EZ 1000 Converter needs to be replaced.

⚠ CAUTION

Any work on the system may impair machine protection.

Procedure

1. Save the AMS EZ 1000 Converter configuration, if possible.
   a) Connect the configuration device (PC/Laptop) through the USB connection to the AMS EZ 1000 Converter.
   b) Switch on the power supply of the converter to be replaced – if not already done.
   c) Start AMS Machine Studio. The software automatically connects to the AMS EZ 1000 Converter and opens the online view of the converter.
   d) Click **Configure** to open the configuration of the AMS EZ 1000 Converter.
   e) Click **Reload** to load the configuration and the calibration data[6] from the converter.
   f) Save the configuration file including the calibration data[6]. Go to **File**, and select **Save as**.
   g) Go back to the editor and close it.
   Do not close AMS Machine Studio.
   h) Switch off the power supply.
2. Disconnect all wires from the AMS EZ 1000 Converter including sensor and USB cable.
3. Remove the AMS EZ 1000 Converter from the mounting rail.
4. Install the new AMS EZ 1000 Converter.
5. Reconnect all wires including sensor and USB cable.
6. Switch on the power supply.
   The converter will automatically be detected by AMS Machine Studio.
7. Load the configuration file including the calibration data[6] from the memory of the configuration device to the AMS EZ 1000 Converter. If a defect prevents reading the configuration from the AMS EZ 1000 Converter to be replaced, use a back-up configuration file or create a new configuration.
   a) Click the new AMS EZ 1000 Converter to open the online view.

6 *Only configuration files of measuring chains calibrated with the **Manual calibration** method contains reusable calibration data.*

b) Click **Configure** to open the configuration of the AMS EZ 1000 Converter.

c) Open the saved configuration file. Go to **File**, and select **Open**.

d) Click **Send & close** to send the configuration to the new converter.

8. Check or recalibrate the new AMS EZ 1000 Converter.

   Manual calibration: If the measuring chain was originally calibrated with the **Manual calibration** method, check the linearity of the measuring chain to ensure proper work of the replaced converter. See Linearity check for details.

   Note
   Emerson recommends recalibrating the measuring chain – no matter whether the sensor or the converter has been replaced.

   Automatic calibration and **Multipoint calibration**: If the measuring chain was originally calibrated with the **Automatic calibration** method or the **Multipoint calibration** method, recalibrate the measuring chain with a calibration method suitable for the measuring chain. See Calibration.

   Now, the new AMS EZ 1000 Converter is ready for operation.

10.4 Replace a sensor

Follow the steps below to replace a defective sensor.

⚠ CAUTION

Any work on the system may impair machine protection.

Procedure

1. Remove the sensor to be replaced from the machine and unfasten all sensor cable fastenings.
2. Disconnect the sensor to be replaced from the AMS EZ 1000 Converter.

   The sensor can be disconnected and connected while the AMS EZ 1000 Converter is powered.
3. Connect the new sensor to the AMS EZ 1000 Converter.
4. Check the AMS EZ 1000 Converter.

   Does the current configuration meets the requirements of the new sensor?
5. Calibrate the AMS EZ 1000 Converter and the new sensor.

   See Calibration and Offline (Easy) calibration for details.
6. To ensure proper work of the replaced sensor, check the linearity of the measuring chain.

   See Linearity check for details.
7. Install the new sensor.

   See sensor manual for installation details.

10.5 Linearity check

Emerson recommends checking the linearity of the AMS EZ 1000 Converter after sensor or converter replacement and after changes to the configuration of the converter.

Prerequisites

- Calibration gauge (for example CAL 064) with micrometer screw gauge and material sample that matches the material of the measuring object (machine shaft).
- -24 V DC power supply, if the converter is not supplied by a measuring amplifier such as an A6500-UM.
- Voltmeter with an accuracy of 1%.
- AMS EZ 1000 Converter with sensor connected, configured, and calibrated on the connected sensor.

The configured measuring range of the sensor is checked from the measuring range center to the end of the measuring range (0 to +x) and then from the center to the beginning of the measuring range (0 to -x).

Procedure

1. Connect the power supply – if not already done.
2. Connect the voltmeter to the signal output of the converter.
3. Switch on the power supply.
4. Measure the output voltage of the converter.
5. Mount the sensor into the calibration gauge at the center of the measuring range – the voltmeter reads -10 V.
6. Set the micrometer screw of the calibration gauge to **0**.

   This defines the center of the measuring range [-10 V / 0 mm] and is the starting point for the linearity check.
7. Adjust the voltage steps -12 V, -14 V, -16V , and -18 V as shown in Figure 10-1 with the calibration gauge, and check the distance with the micrometer screw of the gauge. Continue the check with the voltage steps -8 V, -6 V, -4 V, and -2 V, and check the distance.

Figure 10-1: Linearity check

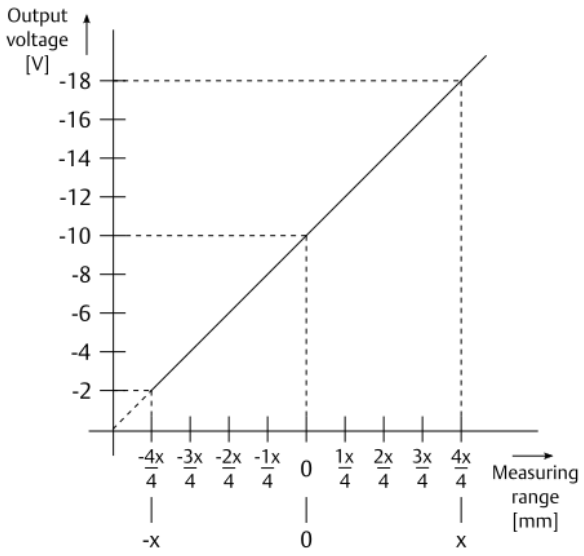

x: Half of the measuring range

Example: x = 1 mm if an EZ 1080 sensor with a standard measuring range of 2 mm is used.

The deviation between the ideal distance, described by the Figure 10-1, and the measured distance must be within the tolerances stated for the checked measuring chain in Technical data .

10.6 Firmware update

⚠ CAUTION

Any work on the system may impair machine protection.

⚠ CAUTION

Before starting work on the system, place machine in a safe state and bypass any safety function that could be affected by the change.

The firmware of the AMS EZ 1000 Converter can be updated by using AMS Machine Studio.

Note
Emerson recommends saving the configuration of the AMS EZ 1000 Converter before starting the update process. See operating manual AMS Machine Studio - General Functions (MHM-97879) for details.

Prerequisites

Ensure that the AMS EZ 1000 Converter to be updated is powered and the following items are available:

- Computer with the latest version of AMS Machine Studio installed.
- USB cable with Type-A and micro-USB B plug
- Latest firmware file
- Suitable tool for pressing the calibration button, such as a 2 mm screw driver or a pen.

Procedure

1. Start AMS Machine Studio.
2. Connect the AMS EZ 1000 Converter through the USB interface to the PC.
3. Switch on the power supply of the AMS EZ 1000 Converter, if not already done. AMS Machine Studio automatically establishes a connection to the AMS EZ 1000 Converter.
4. In AMS Machine Studio, select the AMS EZ 1000 Converter to be updated from the device tree.
5. Press Ctrl+Alt+M to enable the maintenance mode. The **Advanced** tab with the **Firmware update** button appears.

Figure 10-2: Advanced tab with Firmware update button

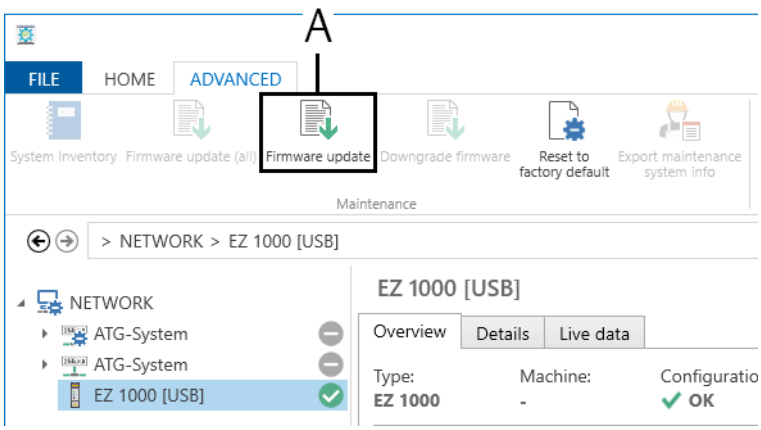

A. ***Firmware update*** *button*

6. Click **Firmware update** to open a file browser to browse to the storage location of the firmware file.
7. Select the firmware file, and click **Open**.
   The update process starts. The update dialog opens.

Note
During the update process the output voltage of the converter is set to > -1.5 V DC.

Figure 10-3: Update dialog

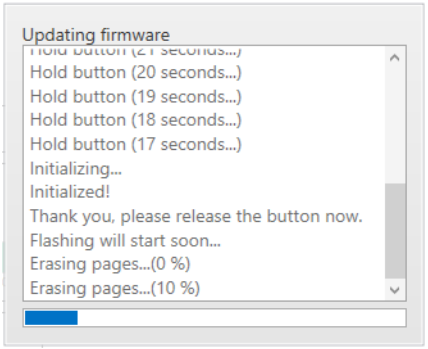

8. Follow the instructions on the screen.

⚠ CAUTION

Do not remove the USB cable during the update process.

After the successful firmware update, the AMS EZ 1000 Converter restarts and the LED switches to a steady light – provided that a sensor is connected and within the OK range.

The firmware version, currently installed on the AMS EZ 1000 Converter, can be verified by the Online View of AMS Machine Studio (see Online View).

9. Check the configuration of the AMS EZ 1000 Converter. If necessary load the configuration saved beforehand to the converter (see Send a saved configuration file to the AMS EZ 1000 Converter).
10. Disconnect the USB cable.
11. Finally, check the calibration of the AMS EZ 1000 Converter (see Linearity check).

10.7 Reset to factory default

Use this command to reset the connected converter to the default parameter settings.

1. Start AMS Machine Studio.
2. Connect the AMS EZ 1000 Converter through the USB interface to the computer.
3. Switch on the power supply of the AMS EZ 1000 Converter, if not already done. AMS Machine Studio automatically establishes a connection to the AMS EZ 1000 Converter.
4. In AMS Machine Studio, select the AMS EZ 1000 Converter in the device tree.
5. Press Ctrl+Alt+M to enable the maintenance mode. The **Advanced** tab with the button for resetting the converter to factory default appears.

Figure 10-4: Advanced tab with Reset to factory default button

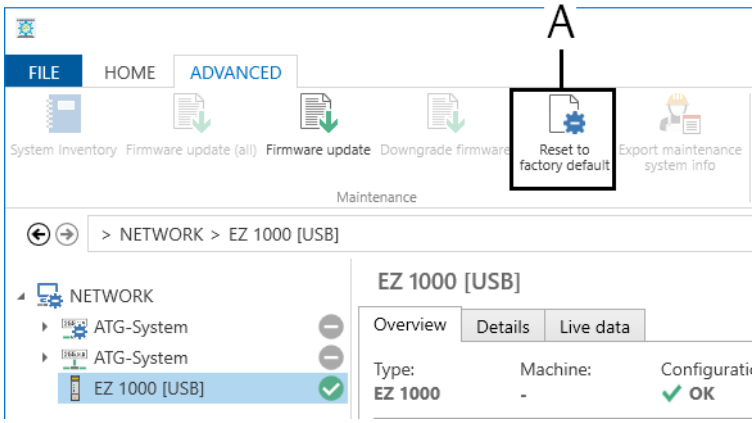

*A. **Reset to factory default** button*

6. Click **Reset to factory default** to reset the connected converter to the default parameter settings.
   The following confirmation prompt appears.

Figure 10-5: Reset to factory default – confirmation prompt

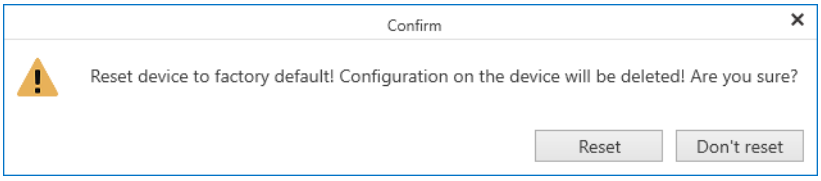

7. Click **Reset** to reset the converter. Otherwise click **Don't reset**.

⚠ CAUTION

The preset configuration on the converter including the calibration data will be deleted and replaced by the default configuration.

After a successful reset the OK LED is triple flashing and the converter is marked with the yellow warning triangle in the online view.

11 Technical data

Only specifications with indicated tolerances or limit values are binding. Data without tolerances or without error limits are informative data and not guaranteed. Technology is under constant development, and specifications are subject to change without notice. If not otherwise specified, all data refer to a nominal supply voltage of -24 V, an environmental temperature of +23°C, an output load of 100 kΩ, material 42CrMo4, a standard measuring range, a 5 meter system cable length[7], and no detuning.

All technical data is based on Emerson reference target material samples.

11.1 Input

Sensor connector for eddy current sensors	EZ105x and EZ108x
	PR 6424, PR 6425, and PR 6426
	Third party sensors which meet the technical requirements of the sensor input such as: Bently Nevada 3300 XL 8 mm Proximity Probes 33010x-xx-xx-yy[1]-xx-xx
Connector	For plugs with or without cap nut.
Protection against short circuit	Yes

1 *yy: 10, 50, or 90*

11.2 Supply

Overvoltage protection	Yes, maximal voltage -60 V DC
Reverse connect protection	Yes
Nominal supply voltage	-24 V
Permissible voltage range	-19 V to -31.2 V DC
Nominal supply current	12 mA
Load resistor	100 kΩ

11.3 Output

Short-circuit prove	Yes
Nominal output voltage range	-2 V to -18 V
Limit range	-1.1 V to -22.4 V
Nominal frequency range	0 to 20 kHz (-3 dB) without cable capacity

7 *Sensor cable length or sensor cable length plus extension cable length.*

Supply voltage influence on the output signal	<20 mV/10 V
Output voltage ripple	<10 mV rms
Output resistance	200 Ω
Signal switch-on time and converter warm-up-time	See Table 11-1

Table 11-1: Influence of the signal switch-on-time and the converter warm-up-time on the linearity

Signal switch-on-time[1]	Converter warm-up-time[2]	Linearity error
60 seconds[3]		<0.1%
	<10 minutes[4]	<1.5%
	<60 minutes[4]	<0.5%
	>60 minutes[4]	<0.1%

1 *Valid for a restart after the AMS EZ 1000 measuring chain has been in operation for at least 60 minutes.*
2 *Valid for the operation a complete measuring chain (converter + connected sensor)*
3 *Time until output signal change.*
4 *Signal change within this time.*

11.4 Errors and tolerances

Note
For measurements that require a higher measuring accuracy, factory calibrated measuring chains are available.

The deviation from straight line (DSL) error is the maximum error (in mm) in the sensor gap reading at a given voltage compared to a straight line (see Table 11-2). DSL errors are associated with errors in axial position or sensor gap readings.

The incremental scale factor (ISF) error is the maximum amount the scale factor varies from a default scale factor (see Table 11-2) when measured at specified increments throughout the linear range. Measurements are taken at defined increments (see Table 11-2). The ISF error is associated with errors in radial vibration readings.

Table 11-2: DSL and ISF default values depending on sensor type and output sensitivity setting

Sensor type	Extended range factor	Straight line and default scale factor		ISF incremental steps	Recommended dynamic measuring range peak-peak
		ISO[1]	API[1]		
EZ105x	1.0	16.0 V/mm	15.74 V/mm	125 µm	≤625 µm
	1.5	10.67 V/mm	10.59 V/mm	---	---
	2.0	8.0 V/mm	7.87 V/mm	---	---

Table 11-2: DSL and ISF default values depending on sensor type and output sensitivity setting *(continued)*

Sensor type	Extended range factor	Straight line and default scale factor		ISF incremental steps	Recommended dynamic measuring range peak-peak
		ISO[1]	API[1]		
EZ108x	1.0	8.0 V/mm	7.87 V/mm	250 µm	≤1250 µm ≤2000 µm[2]
	1.5	5.33 V/mm	5.25 V/mm	---	---
	2.0	4.0 V/mm	3.94 V/mm	---	---
PR 6424 PR 6425	1.0	4.0 V/mm	3.94 V/mm	500 µm	≤2500 µm
	2.0	2.0 V/mm	1.97 V/mm	---	---
	3.0	1.33 V/mm	1.31 V/mm	---	---
PR 6426	1.0	2.0 V/mm	1.97 V/mm	---	---
	2.0	1.0 V/mm	0.98 V/mm		
	3.0	0.67 V/mm	0.66 V/mm		

1 *See Output sensitivity*
2 *Standard measuring chain according to API 670 consisting of EZ108x-xx-xx-010, EZ190x-040, and AMS EZ 1000*

Converter with standard target material 42CrMo4.

AMS EZ 1000 Converter with AMS EZ 1000 Sensors

Basis of the data are measurements with:

- AMS EZ 1000 Converter and EZ190x at the temperature of the AMS EZ 1000 Converter.
- First meter of the AMS EZ 1000 Sensor cable at the temperature of the AMS EZ 1000 Sensor tip.
- No ambient temperature change of the AMS EZ 1000 Converter during 1 hour before the measurement. Power and sensor connected to the AMS EZ 1000 Converter for at least 10 minutes before measurement and calibration.
- Reference material 1.7224 (42CrMo4; AISI/SAE 4140), unless otherwise stated.

AMS EZ 1000 Converter with PR 642x sensors

Basis of the data are measurements with:

- PR 642x cable at the temperature of the AMS EZ 1000 Converter.
- First meter of the PR 642x cable at the temperature of the PR 642x tip.
- No ambient temperature change of the AMS EZ 1000 Converter during 1 hour before the measurement. Power and sensor connected to the AMS EZ 1000 Converter for at least 10 minutes before measurement and calibration.
- Reference material 1.7224 (42CrMo4; AISI/SAE 4140), unless otherwise stated.

11.4.1 EZ1900-ADAP-90 adapter

Table 11-3: Additional linearity error when using an EZ1900-ADAP-90 adapter to connect an EZ108x-xx-xx-xxx sensor

Manual calibration with compensation data (see Manual calibration – guided process)	<0.2 %
Automatic calibration	<0.1 %

11.4.2 AMS EZ 1000 Converter with EZ105x

Typical accuracy of the standard measuring chain following API 670 consisting of EZ105x-xx-xx-010, EZ190x-040, and AMS EZ 1000 Converter with standard target material 42CrMo4 and calibration methods **Manual**, **Automatic**, or **Multipoint**:

Table 11-4: Accuracy following API 670

Temperature range		DSL	ISF
0°C to 45°C (Test range)		See Table 11-5	± 7% (of nominal value in dynamic range)
EZ 1000	-35°C to 65°C (Operating range)	See Table 11-5 of MR	± 15% (of nominal value in dynamic range)
EZ 190x	-35°C to 65°C (Operating range)		
EZ 105x	-35°C to 120°C (Operating range)		

Accuracy of measuring chains different from the standard measuring chain

Add the measurement inaccuracies in Table 11-5 to the values in Table 11-4 to get the accuracy of measuring chains different from the standard measuring chain.

Table 11-5: Additional inaccuracies – DSL

Parameter	Additional Measurement Inaccuracy (DSL), Test range	Additional Measurement Inaccuracy (DSL), Operating range	Remarks
0°C to 45°C (Test range)		±4%	of nominal value, 5 m cable length
		±6%	of nominal value, other cable length
		±10%	of nominal value, 4 m cable length
Cable length 15m		±4%	at +23°C
		-7% to +8%	at -35°C to +85°C (operating range EZ 1000)
		-6% to +5%	at -35°C to +180°C (operating range EZ 108x)

Table 11-5: Additional inaccuracies – DSL *(continued)*

Parameter	Additional Measurement Inaccuracy (DSL), Test range	Additional Measurement Inaccuracy (DSL), Operating range	Remarks
Other target materials	2.25%	2.25%	Material selected from AMS Machine Studio material table
Extended measuring range: 1.5 mm (Extended range factor: 1.5)			
Manual calibration	1.75%	2.0%	
Automatic calibration	1.75%	2.0%	
Multipoint calibration	0.25%	0.5%	
Extended measuring range: 2.0 mm (Extended range factor: 2.0)			
Manual calibration	3.75%	4.0%	
Automatic calibration	3.75%	4.0%	
Multipoint calibration	0.5%	1.0%	
Detune frequency low activated active	0.75%	1.25%	Only possible with multipoint calibration
Converter temperature error at 5 m sensor cable		±2%	-35 to 85°C at 5 meter sensor cable
EZ105x temperature error at 5 m sensor cable		-10% to +6%	-35 to 180°C at 5 meter sensor cable
Converter temperature error at 10 m sensor cable		±1%	-35 to 85°C at 10 meter sensor cable
EZ105x temperature error at 10 m sensor cable		-5% to +1%	-35 to 180°C at 10 meter sensor cable

11.4.3 AMS EZ 1000 Converter with EZ108x

Accuracy of the standard measuring chain according to API 670 consisting of EZ108x-xx-xx-010, EZ190x-040, and AMS EZ 1000 Converter with standard target material 42CrMo4:

Table 11-6: Accuracy according to API 670

Temperature range	DSL	ISF
0°C to 45°C (Test range)	± 1.25% of MR[1]	± 5% (of nominal value in dynamic range)
EZ 1000 -35°C to 65°C (Operating range)	± 1.0% of MR[12]	± 10% (of nominal value in dynamic range)

Table 11-6: Accuracy according to API 670 *(continued)*

Temperature range		DSL	ISF
EZ 190x	-35°C to 65°C (Operating range)		
EZ 108x	-35°C to 120°C (Operating range)	± 1.5% of MR[12]	

1 *Measuring range*
2 *Additional error*

Calibration methods Offline (Easy) and Automatic – typical values

The values of Table 11-6 are typical values for measuring chains, calibrated with calibration method **Offline (Easy)** or **Automatic**.

Typical accuracy of non-API 670 conform measuring chains

Add the measurement inaccuracies in Table 11-7 to the values in Table 11-6 to get the accuracy of non-API 670 conform measuring chains[8].

Incremental scale factor (ISF)

The ISF error is typically ±7% within the dynamic measuring range, under the following conditions:

- System cable length: 4 to 10 meters
- Extended range factor: 1.0
- Target material: 42CrMo4

Table 11-7: Additional inaccuracies – DSL

Parameter	Additional Measurement Inaccuracy (DSL), Test range	Additional Measurement Inaccuracy (DSL), Operating range	Remarks
Cable length: 15 m		±3.5%	at +23°C
		±5.0%	at -35°C to +85°C (operating range converter)
		-1% to +7%	at -35°C to +180°C (operating range EZ108x)
Cable length: 30 m		±5.0%	at +23°C
		-5% to +6%	at -35°C to +85°C (operating range converter)
		-1% to +8%	at -35°C to +180°C (operating range EZ108x)
Other cable lengths	1.25%	1.25%	

8 *The typical accuracy is defined by a statistical evaluation of the deviation from the nominal value. 95.4% (±2 Sigma) of the deviations of all measured measuring chains are within the range of the stated typical deviation.*

Table 11-7: Additional inaccuracies – DSL *(continued)*

Parameter	Additional Measurement Inaccuracy (DSL), Test range	Additional Measurement Inaccuracy (DSL), Operating range	Remarks
Other target materials	1.25%	1.25%	Material selected from AMS Machine Studio material table
Extended measuring range: 3 mm (Extended range factor: 1.5)			
Manual calibration	1.25%	1.5%	
Automatic calibration	1.25%	1.5%	
Multipoint calibration	0.25%	0.5%	
Extended measuring range: 4 mm (Extended range factor: 2.0)			
Manual calibration	3.75%	4.0%	
Automatic calibration	3.75%	4.0%	
Multipoint calibration	0.5%	1.0%	
Detune frequency low	0.75%	1.25%	Only possible with multipoint calibration
AMS EZ 1000 Converter		±1%	-35 to 85°C at 1+4 meter / 5 meter sensor cable
EZ108x		±2%	-35 to 180°C at 1+4 meter / 5 meter sensor cable

11.4.4 AMS EZ 1000 Converter with PR 6424

Typical accuracy of the standard measuring chain consisting of PR 6424/0xx-xx0 and AMS EZ 1000 Converter with standard target material 42CrMo4 and calibration method **Multipoint**.

Table 11-8: Accuracy at +23°C – standard measuring range

Calibration method	DSL	ISF
Multipoint calibration	± 2.0% of MR[1] Add the following values if applicable: Other cable lengths: 0.0% Other target materials: ± 1.0% Detune frequency low: ± 1.0%	± 10% (of nominal value in dynamic range)

1 *Measuring range*

Accuracy of measuring chains different from the standard measuring chain

Add the measurement inaccuracies in Table 11-9 and Table 11-10 to the values in Table 11-8 to get the accuracy of measuring chains different from the standard measuring chain.

Table 11-9: Accuracy at +23°C – extended measuring range

Measuring range	Calibration method	DSL
8.0 mm (Extended range factor: 2.0)	Multipoint	± 1.0%
12.0 mm (Extended range factor: 3.0)	Multipoint	± 3.0%

Table 11-10: Sensor temperature inaccuracies

Measuring range	Temperature range	Additional DSL[1]
4 mm	-35°C to +85°C (Operating range converter)	± 5.0%
	-35°C to +120°C (Operating range sensor)	± 6.0%
8 mm (Extended range factor: 2.0)	-35°C to +85°C (Operating range converter)	± 10.0%
	-35°C to +120°C (Operating range sensor)	± 10.0%
12 mm (Extended range factor: 3.0)	0°C to +60°C (Operating range converter)	± 10.0%
	-35°C to +85°C (Operating range converter)	± 25.0%
	0°C to +90°C (Operating range sensor)	± 12.0%

Table 11-10: Sensor temperature inaccuracies *(continued)*

Measuring range	Temperature range	Additional DSL[1]
	-35°C to +180°C (Operating range sensor)	± 20.0%

1 *Maximum linearity errors for all cable lengths and mentioned maximum temperatures. Linearity errors for specific cable lengths and lower temperatures may be lower. Contact support for details.*

11.4.5 AMS EZ 1000 Converter with PR 6425

Typical accuracy of the standard measuring chain consisting of PR 6425/010-1x0 and AMS EZ 1000 Converter with standard target material 42CrMo4 and calibration method **Multipoint**.

Table 11-11: Accuracy at +23°C – standard measuring range

Calibration method	DSL	ISF
Multipoint calibration	± 1.0% of MR[1] Add the following values if applicable: Other cable lengths: 0.0%	± 10% (of nominal value in dynamic range)

1 *Measuring range*

Accuracy of measuring chains different from the standard measuring chain

Add the measurement inaccuracies in Table 11-12 and Table 11-13 to the values in Table 11-11 to get the accuracy of measuring chains different from the standard measuring chain.

Table 11-12: Accuracy at +23°C – extended measuring range

Measuring range	Calibration method	DSL
8.0 mm (Extended range factor: 2.0)	Multipoint	2.5%
12.0 mm (Extended range factor: 3.0)	Multipoint	6.0%

Table 11-13: Sensor temperature inaccuracies – sensor with 4 meters sensor cable

Measuring range	Temperature range	Additional DSL
4 mm	-35°C to +85°C (Operating range converter)	-8% to +5%
	-35°C to +180°C (Operating range sensor)	-3% to +5%
	-35°C to +380°C (Operating range sensor)	-3% to +9%

11.4.6 AMS EZ 1000 Converter with PR 6426

Typical accuracy of the standard measuring chain following API 670 consisting of PR 6426/0x0-x00 and AMS EZ 1000 Converter with standard target material 42CrMo4 and calibration method **Multipoint**.

Table 11-14: Accuracy at +23°C – standard measuring range

Calibration method	DSL	ISF
Multipoint calibration	± 1.5% of MR[1] Add the following values if applicable: Other cable lengths: ± 0.5% Other target materials: ± 1.0% Detune frequency low: ± 0.5%	---

1 *Measuring range*

Accuracy of measuring chains different from the standard measuring chain

Add the measurement inaccuracies in Table 11-15 to the values in Table 11-14 to get the accuracy of measuring chains different from the standard measuring chain.

Table 11-15: Accuracy at +23°C – extended measuring range

Measuring range	Calibration method	DSL
16.0 mm (Extended range factor: 2.0)	Multipoint	± 0.5%
24.0 mm (Extended range factor: 3.0)	Multipoint	± 0.5%

Table 11-16: Sensor temperature inaccuracies

Measuring range	Temperature range	Additional DSL[1]
8 mm	-35°C to +85°C (Operating range converter)	-20.0%/+10.0%
	-35°C to +150°C (Operating range sensor)	-15.0%/+6.0%
16 mm (Extended range factor: 2.0)	-35°C to +85°C (Operating range converter)	-21.0%/+7.0%
	-35°C to +150°C (Operating range sensor)	-22.0%/+7.0%
24 mm (Extended range factor: 3.0)	-35°C to +85°C (Operating range converter)	-32.0%/+16.0%

Table 11-16: Sensor temperature inaccuracies *(continued)*

Measuring range	Temperature range	Additional DSL[1]
	-35°C to +150°C (Operating range sensor)	-34.0%/+14.0%

1 *Maximum linearity errors for all cable lengths and mentioned maximum temperatures. Linearity errors for specific cable lengths and lower temperatures may be lower. Contact support for details.*

11.5 Environmental conditions and mechanical design

The measuring chain is designed for industrial applications and may be used in heights of up to 2000 m above sea level.

The application environment must be verified not to exceed the environmental specifications listed in the operating manual of each part of the measurement chain.

Environmental temperature		
	Reference value	+23°C
	Nominal operating range	-35°C to +85°C
	Limits for storage and transport	-35°C to +85°C
maximal Vibration		5 g at 60 Hz
Humidity		5 to 95%, non-condensing Additional linearity error of ±0.2% for EZ 105x and EZ 108x with 5 meter sensor cable and standard measuring range at 10 to 100 % relative humidity (rh), condensing.
Airborne contaminants resistance		ISA-S71.04-1985 class G3 Deviation of linearity error <1%
Dimensions		Height: 90mm Width: 26mm Depth: 75mm See also Mounting
Weight		Approximately 160 g

12 Certificates

CE 0158

EMERSON

EU-Declaration of Conformity (Translation)

We: epro GmbH, Jöbkesweg 3, 48599 Gronau
declare under our sole responsibility that following product(s):

Product designation:	**EZ 1000**
Product description:	**Eddy current measurement system consisting of signal converter type EZ 1000 (SIS) with sensor types EZ 105x, EZ 108x, EZ 116x, PR 6424, PR 6425 and PR 6426**
Part numbers	**EZ1000, EZ1000-SIS with** **EZ105(0-1) – (02 - 10) - (00, 05) - (005 - 300)** **EZ105(0-1) – (02 - 10) - (00, 05) - (005 - 300) - (001 - 002)** **EZ105(2-3) – (08 - 40) - (00, 20) - (005 - 300)** **EZ105(2-3) – (08 - 40) - (00, 20) - (005 - 300) - (001- 002)** **EZ108(0-1) – (02 – 25, RM) - (00 - 20) - (005 - 300)** **EZ108(0-1) – (02 – 25, RM) - (00 - 20) - (005 - 300) - (001 - 004)** **EZ108(2-3) – (08 – 95, RM) - (00 - 75) - (005 - 300)** **EZ108(2-3) – (08 – 95, RM) - (00 - 75) - (005 - 300) - (001 - 004)** **EZ116(0-1) – (04 – 29) - (00 - 24) - (010 - 100)** **EZ116(2-3) – (15 – 95) - (00 - 75) - (010 - 100)** **PR 6424 / (0-1) (0-1) (0-6, B, G, M, R) – (0-1) (0-4) (0-1)** **PR 6425 / 0 1 0 – 1 (0-4) (0-1)** **PR 6426 / 0 (0-1) 0 – (0-1) (0-4) (0-1)**

are in conformity with the terms of the directives mentioned below including any amendment valid at the date of declaration:

2014/30/EU	Electromagnetic compatibility
2014/34/EU	Equipment and protective system intended for use in potentially explosive atmospheres
2011/65/EU	The restriction of the use of certain hazardous substances in electrical and electronic equipment

Following harmonized standards have been applied:

2014/30/EU	EN 61326-1	Electrical equipment for measurement, control and laboratory use. EMC requirements Part 1. General requirements
2014/34/EU	EN 60079-0	Explosive atmospheres - Part 0: Equipment - General requirements
	EN 60079-7	Explosive atmospheres - Part 7: Equipment protection by increased safety "e""
	EN 60079-11	Explosive atmospheres - Part 11: Equipment protection by type of protection "i"
2011/65/EU	EN IEC 63000	Technical documentation for the assessment of electrical and electronic products with respect to the restriction of hazardous substances

For the type examination according to EN 60079-0, EN 60079-7 and EN 60079-11 the following notified body has been involved;
DEKRA EXAM GmbH
Type examination certificate BVS 18 ATEX E 011 X

Authorized person for technical documentation:
Bruno Hecker, Jöbkesweg 3, 48599 Gronau

Gronau, 19 December 2024		B. Hecker
Place, Date	Managing Director	**Quality**

UKCA-Declaration of Conformity

We, the manufacturer: epro GmbH, Jöbkesweg 3, 48599 Gronau, Germany declare under our sole responsibility that following product(s):

Product designation:	**EZ 1000**
Product description:	**Eddy current measurement system consisting of signal converter type EZ 1000 (SIS) with sensor types EZ 105x, EZ 108x, EZ 116x, PR 6424, PR 6425 and PR 6426**
Part numbers	**EZ1000, EZ1000-SIS with** **EZ105(0-1) – (02 - 10) - (00, 05) - (005 - 300)** **EZ105(0-1) – (02 - 10) - (00, 05) - (005 - 300) - (001 - 002)** **EZ105(2-3) – (08 - 40) - (00, 20) - (005 - 300)** **EZ105(2-3) – (08 - 40) - (00, 20) - (005 - 300) - (001- 002)** **EZ108(0-1) – (02 – 25, RM) - (00 - 20) - (005 - 300)** **EZ108(0-1) – (02 – 25, RM) - (00 - 20) - (005 - 300) - (001 - 004)** **EZ108(2-3) – (08 – 95, RM) - (00 - 75) - (005 - 300)** **EZ108(2-3) – (08 – 95, RM) - (00 - 75) - (005 - 300) - (001 - 004)** **EZ116(0-1) – (04 – 29) - (00 - 24) - (010 - 100)** **EZ116(2-3) – (15 – 95) - (00 - 75) - (010 - 100)** **PR 6424 / (0-1) (0-1) (0-6, B, G, M, R) – (0-1) (0-4) (0-1)** **PR 6425 / 0 1 0 – 1 (0-4) (0-1)** **PR 6426 / 0 (0-1) 0 – (0-1) (0-4) (0-1)**

are in conformity with the terms of the directives mentioned below including any amendment valid at the date of declaration:

S.I. 2016 No. 1091 Electromagnetic Compatibility Regulations 2016

S.I. 2016 No. 1107 Equipment and Protective Systems Intended for use in Potentially Explosive Atmospheres Regulations 2016

S.I. 2016 No. 3032 The restriction of the use of certain hazardous substances in electrical and electronic equipment

Following standards have been applied:

S.I. 2016 No. 1091	EN 61326-1	Electrical equipment for measurement, control and laboratory use. EMC requirements. Part 1. General requirements
S.I. 2016 No. 1107	EN 60079-0	Explosive atmospheres -Part 0: Equipment- General requirements
	EN 60079-7	Explosive atmospheres- Part 7: Equipment protection by increased safety "e"
	EN 60079-11	Explosive atmospheres- Part 11: Intrinsic Safety „i"
S.I. 2016 No. 3032	EN IEC 63000	Technical documentation for the assessment of electrical and electronic products with respect to the restriction of hazardous substances

For the type examination according to EN 60079-0, EN 60079-7 and EN 60079-11 the following notified body has been involved:

DEKRA Testing and Certification GmbH
Type examination certificate BVS 18 ATEX E 001 X

Authorized person for technical documentation:
Bruno Hecker, Jöbkesweg 3, 48599 Gronau, Germany

Authorized Representative:
Emerson Process Management Limited,
company No 00671801
Meridian East,
Leicester
LE19 1UX, United Kingdom
Regulatory Compliance Department
email:*ukproductcompliance@emerson.com*
Phone: +44 11 6282 23 64

M. Fränzer
Managing Director

B. Hecker
Quality

Place, Date: Gronau, 19 December 2024

Emerson Process Management
1100 W. Louis Henna Blvd.
Round Rock, TX 78681

Statement Regarding the China RoHS Compliance of Emerson Product – EZ1000

Please refer to Table 1 for the names and contents of the toxic or hazardous substances or elements contained in Emerson products.

Table 1: Names and Contents of Toxic or Hazardous Substances or Elements
表1： **有毒有害物**质或元素的名称及含量

部件名称 Part Name	有毒有害物质或元素 Toxic or hazardous Substances and Elements						
	铅 Lead (Pb)	**汞** Mercury (Hg)	**镉** Cadmium (Cd)	**六价铬** Hexavalent Chromium (Cr (VI))	**多溴联苯** Polybrominated biphenyls (PBB)	**多溴二苯醚** Polybrominated diphenyl ethers (PBDE)	
印刷电路板组装 PC BD ASSY	X	O	O	O	O	O	
围墙 ENCLOSURE	O	O	O	O	O	O	
印刷电路板组装支持 PC BD ASSY SUPPORT	O	O	O	O	O	O	
O 表示该有毒有害物质在该部件所有均质材料中的含量均在GB/T 26572规定的限量要求以下 O: Indicates that this toxic or hazardous substance contained in all of the homogeneous materials for this part is below the limit requirement in GB/T 26572.							
X 表示该有毒有害物质至少在该部件的某一均质材料中的含量超出GB/T 26572规定的限量要求。 X: Indicates that this toxic or hazardous substance contained in at least one of the homogeneous materials used for this part is above the limit requirement in GB/T 26572							
环保期限（EFUP）的产品及其部件是每个列出的符号，除非另有标明。使用期限只适用于产品在产品手册中规定的条件下工作 The Environmentally Friendly Period (EFUP) for the product and its parts are per the symbol listed, unless otherwise marked. Use Period is valid only when the product is operated under the conditions defined in the product manual.							

James McFerrin
Environmental Compliance Manager PSG
T 512 832 3271 E james.mcferrin@emerson.com

Index

Numerics

3-wire connection 31

A

Adjustment 36

B

Basic 71

C

Cable
    Length 27
    Type 27
Calibration
    2-Point 81
    Automatic 79
    Manual 77
Calibration state 91
CCC Certification 11
Channel OK 19, 90
Close editor 71
Commissioning 21
Compare 68
Component database 87
Configuration editor 66
Configuration offline 61
Configuration online 62
Configuration reload 85
Configuration send 84
Connection
    Output signal 29
    Power supply 29
    Sensor 33
Converter health 92
CSA 21

D

Detune 39, 74
DIN rail 15, 21
Disposal 11

E

ESD 14
Extended measuring range 73

F

Firmware 104
Frequency 94
Function principle 18

H

Housing 21

I

Influence 39
Input 72
Installation 21

L

LED 16
Linearity check 103

M

Machine Studio 15, 61, 84
Maximum torque 38
Measurement 73
Measurement dynamic 36
Measurement static 36
Measuring chain 18
Minimum distance 39
Mounting 21

N

New 67

O

Online commands
    Calibration Verification Report 98
Oscillator circuit 18
Oscillator frequency 39
Output voltage 100
Overview 90

P

Power supply 29
PR 6425 116

R

Reload 68
Replacement 101
Report 68

S

Send & close 67
Sensitivity
    API 74
    ISO 74
Sensor
    Frequency offset 78
    Gain 78
    Offset 78
Sensor supervision 19
Sensor types 15
Show History/Draft 69
Shrinkage tube 100
Space 21

T

Target material 18, 73, 87
Technical support 10

U

USB 15

V

Voltage output 91

W

Wire cross-section 28
Wizard 74

MHM-97884
Rev. 2.1
2026

Emerson
12001 Technology Drive
Eden Prairie, MN 55344 USA
T 1(952)828-3000
www.Emerson.com

Emerson
835 Innovation Drive
Knoxville, TN 37932 USA
T +1 865-675-2400
F +1 865-218-1401
www.Emerson.com

Emerson
Jöbkesweg 3
48599 Gronau
Germany
T +49 2562 709 0
F +49 2562 709 401
www.Emerson.com/ams

©2026, Emerson. All rights reserved.
The contents of this publication are presented for informational purposes only, and while diligent efforts were made to ensure their accuracy, they are not to be construed as warranties or guarantees, express or implied, regarding the products or services described herein or their use or applicability. All sales are governed by our terms and conditions, which are available on request. We reserve the right to modify or improve the designs or specifications of our products at any time without notice.

The Emerson logo is a trademark and service mark of Emerson Electric Co. The AMS logo is a mark of one of the Emerson family of companies. All other marks are the property of their respective owners.

